CLERK'S COPY.

Vol. I

TRANSCRIPT OF RECORD

Supreme Court of the United States

OCTOBER TERM, 1940

No. 9

THE SCHRIBER-SCHROTH COMPANY, PETITIONER,

vs.

THE CLEVELAND TRUST COMPANY, CHRYSLER CORPORATION

No. 10

THE ABERDEEN MOTOR SUPPLY COMPANY, PETITIONER,

vs.

THE CLEVELAND TRUST COMPANY, CHRYSLER CORPORATION

No. 11

THE F. E. ROWE SALES COMPANY, PETITIONER,

vs.

THE CLEVELAND TRUST COMPANY, CHRYSLER CORPORATION

ON WRITS OF CERTIORARI TO THE UNITED STATES CIRCUIT COURT OF APPEALS FOR THE SIXTH CIRCUIT

PETITION FOR CERTIORARI FILED JANUARY 15, 1941.

CERTIORARI GRANTED MARCH 25, 1941.

BLANK PAGE

SUPREME COURT OF THE UNITED STATES

OCTOBER TERM, 1940

No. 9

THE SCHRIBER-SCHROTH COMPANY,
PETITIONER,

vs.

THE CLEVELAND TRUST COMPANY, CHRYSLER CORPORATION

No. 10

THE ABERDEEN MOTOR SUPPLY COMPANY,
PETITIONER,

vs.

THE CLEVELAND TRUST COMPANY, CHRYSLER CORPORATION

No. 11

THE F. E. ROWE SALES COMPANY, PETITIONER,

vs.

THE CLEVELAND TRUST COMPANY, CHRYSLER CORPORATION

ON WRITS OF CERTIORARI TO THE UNITED STATES CIRCUIT COURT OF APPEALS FOR THE SIXTH CIRCUIT

VOL. I

INDEX.

	Original	Print
Record from D. C. U. S., Northern District of Ohio.....	1	1
TRIAL PAPERS		
In Case No. 4045		
Caption	1	1
Original bill of complaint.....	2	1
Motion of defendant, The Schriber-Schroth Company, for further and better statement and further particulars (omitted in printing)	14	
Order on motion of defendant, The Schriber-Schroth Company, for further and better statement and further particulars, overruling all but paragraph IV B (omitted in printing)	16	

JUDD & DETWEILER (INC.), PRINTERS, WASHINGTON, D. C., OCTOBER 14, 1940.
—259

TRIAL PAPERS—In Case No. 4045—Continued

	Original	Print
Record from D. C. U. S., Northern District of Ohio—Continued		
Plaintiffs' bill of particulars	16	13
Petition of John H. Bruninga to enter his special appearance, in order to enter a special appearance on behalf of Sterling Products Corporation, for the sole and only purpose of objecting to the jurisdiction (omitted in printing)	18	
Order granting petition of John H. Bruninga for leave to enter special appearance of Sterling Products Corporation—to object to jurisdiction (omitted in printing)	25	
Answer of defendant, The Schriber-Schroth Company, to bill of complaint	26	15
Notice by defendant, The Schriber-Schroth Company, of intention to take depositions	41	30
Supplemental notice by defendant, The Schriber-Schroth Company, of intention to take depositions, attached to Venner et al. depositions	42	30
Notice	43	31
Order for reference to and appointment of special master	43	31
Stipulation of plaintiff and defendant, The Schriber-Schroth Company, consolidating cause No. 4045 with Causes Nos. 4046 and 4047 for trial (omitted in printing)	45	
Order granting stipulation consolidating equity cause No. 4045 with causes Nos. 4046 and 4047 for trial, etc. (omitted in printing)	46	
Amendment to answer of defendant, The Schriber-Schroth Company (omitted in printing)	48	
Stipulation of plaintiff and defendant, The Schriber-Schroth Company, re narrative of transcript (omitted in printing)	49	
Order granting stipulation of plaintiff and defendant, The Schriber-Schroth Company, for filing narrative form testimony in one cause with reference thereto in each of other two causes (omitted in printing)	49	
Order approving narrative form of testimony	50	
Acknowledgment of service of narrative form of testimony	51	33

NARRATIVE FORM OF TESTIMONY

Plaintiffs' Testimony

W. F. Burrer	(omitted in printing)	52
Clarence A. Schroth	(omitted in printing)	54
F. E. Rowe	(omitted in printing)	54
Charles W. Whitney	(omitted in printing)	55
Zay Jeffries	58	34
A. J. Perfier	264	99

Record from D. C. U. S., Northern District of Ohio—Continued

Defendants' Testimony

	Original	Print
Gusfave C. Monckmeier .....(omitted in printing)..	292	
Herbert Frank Ellingham .....(omitted in printing)..	314	
George Ellingham .....(omitted in printing)..	323	
Robert W. D'Vorsky .....(omitted in printing)..	328	
Wm. M. Venner.....	343	101
Charles L. Chadwick	372	132
James V. Saxton	412	173
Charles F. Gilbert	420	181
Sidney D. Royalty	432	195
Louis M. Stellman	449	213

Rebuttal Testimony

Alisle W. Rockhoff.....(omitted in printing)..	599	
R. W. Randall .....(omitted in printing)..	602	
Fred A. Mulrine .....(omitted in printing)..	620	
Bert E. Rockhoff .....(omitted in printing)..	621	
Wm. H. Rockhoff .....(omitted in printing)..	633	
Frank U. Winchester .....(omitted in printing)..	635	
Ralph Murphy	651	267
Stephen R. Castor	664	280
John L. Burns	674	291
A. H. Edgerton	698	316
Edward J. Gulick.....(omitted in printing)..	699	
C. H. Sweet.....(omitted in printing)..	832	
Jack Henderson .....(omitted in printing)..	846	
Milton Tibbetts .....(omitted in printing)..	859	
Zay Jeffries	914	317

Defendants' Surrebuttal Testimony

Walter L. Schoengarth .....(omitted in printing)..	895	
George P. Dorris	1060	348

Report of William B. Woods, special master.....	1092	357
Pleadings and issues	1092	358
Pistons, subject matter of the suit.....	1094	360
Claims of patents charged to be infringed.....	1095	360
Findings of fact	1096	361
Conclusions of law	1105	371
Memorandum:		
Parties, jurisdiction, title and joinder	1109	376
Chrysler Corporation as party plaintiff.....	1109	376
Aluminum Company of America as party plaintiff	1111	378
Venue as to Sterling Products Corporation....	1113	380
Claims and defenses.....	1114	380
Pistons charged to infringe.....	1115	382
Trunk pistons and expedients.....	1116	383
The expired Franquist patent.....	1119	386

	Original	Print
Record from D. C. U. S., Northern District of Ohio—Continued		
Report of William B. Woods, special master—Continued		
Estoppel of plaintiff to deny utility of Franquist...	1122	389
Presumption of operativeness.....	1124	390
Utility—Operativeness	1124	391
Abandonment by Gulick of features in Sterling Pistons claimed to infringe.....	1127	394
Statutory abandonment	1136	403
Validity of Gulick patent in view of rights intervening before his original application was broadened	1141	408
Gulick 1911 and 1914 pistons not illustrated or described in the patent.....	1148	415
Gulick patent validity as affected by material change in the specification.....	1150	417
Mooers patent validity as affected by attempt to broaden original application and material changes in the specification	1153	420
Validity of patents over prior art.....	1153	420
Gulick patent and prior art	1153	421
Invalidity or lack of invention.....	1156	424
Jardine patent and prior art.....	1159	427
Maynard patent and prior art.....	1161	428
Mooers patent and prior art	1164	431
Schmiedeknecht and prior art.....	1165	433
Prior uses	1166	433
Monckmeier pistons	1166	434
Schoengarth pistons.....	1172	439
Long pistons	1174	442
Infringement	1175	443
Resort to "Symptoms of Invention" so-called, unnecessary for such not here controlling.....	1182	449
Commercial acceptance	1182	450
Acquiescence	1184	452
Prior art not cited in the answer.....	1185	452
Alleged copying by defendants	1187	455
Plaintiffs' exceptions to the report of the special master	1190	457
Exception No. 1.....	1190	458
Exception No. 2.....	1191	459
Exception No. 3.....	1192	459
Exception Nos. 4 and 5.....	1194	461
Exception Nos. 6, 7 and 8.....	1195	462
Exception No. 9	1196	463
Exception Nos. 10, 11, 12 and 13.....	1197	464
Exception No. 14.....	1198	466
Exception Nos. 15 and 16.....	1199	466
Exception Nos. 17, 18 and 19.....	1200	467
Exception Nos. 20, 21 and 22.....	1201	468
Exception Nos. 23, 24 and 25.....	1202	469
Exception Nos. 26 and 27.....	1203	470

	Original	Print
Record from D. C. U. S., Northern District of Ohio—Continued		
Plaintiffs' exceptions to the report of the special master—Continued		
Exception Nos. 28, 29 and 30	1204	471
Exception Nos. 31, 32 and 33	1205	472
Exception Nos. 34 and 35	1206	473
Exception Nos. 36 and 37	1207	474
Exception No. 38	1208	476
Exception Nos. 39 and 40	1210	477
Exception Nos. 41 and 42	1211	478
Exception No. 43	1212	479
Exception Nos. 44 and 45	1213	480
Exception Nos. 46 and 47	1214	481
Exception Nos. 48, 49 and 50	1215	481, 482
Exception Nos. 51, 52 and 53	1216	482, 483
Exception No. 54	1217	483
Exception No. 55	1218	485
Exception Nos. 56, 57 and 58	1219	485, 486
Exception Nos. 59, 60 and 61	1220	486, 487
Exception No. 62 and Nos. 63 to 97, inclusive	1221	487
Exception Nos. 98, 99, 100 and 101	1225	492
Exception Nos. 102, 103 and 104	1226	493
Exception Nos. 105, 106, 107 and 108	1227	493, 494
Exception Nos. 109, 110 and 111	1228	495
Memorandum on Exceptions to master's report	1229	496
Final decree	1230	496
Petition for appeal	1231	497
Order allowing appeal	1231	498
Assignment of errors	1232	499
Group A—Assignment of errors relating to validity of the Gulick Patent No. 1,815,733	1232	499
Group B—Assignment of errors relating to infringement of the Gulick Patent in Suit	1240	506
Group C—Assignment of errors relating to validity of the Jardine Patent No. 1,763,523	1241	508
Group D—Assignment of errors relating to infringement of Jardine Patent in Suit	1242	509
Group E—Assignment of errors relating to validity of Maynard Patent No. 1,655,968	1243	510
Group F—Assignment of errors relating to infringement of Maynard Patent in Suit	1245	512
Group G—Assignment of errors relating to validity of Mooers Patent No. 1,402,309	1246	513
Group H—Assignment of errors relating to infringement of Mooers Patent in Suit	1248	515
Group I—Assignment of errors relating to validity of Schmiedeknecht Patent No. 1,256,265	1248	516
Group J—Assignment of errors relating to infringement of the Schmiedeknecht Patent in Suit	1249	516
Group K—General assignment of errors	1250	517

Record from D. C. U. S., Northern District of Ohio—Continued	Original	Print
Citation	1251	518
Bond on appeal	1253	518
Order granting stipulation for filing narrative form testimony in one cause with reference thereto in each of other two causes	1255	520
Order extending time to November 24, 1934 for lodging narrative statement of evidence and filing praecipe and to December 16, 1934 for filing transcript of record in United States Circuit Court of Appeals (omitted in printing)	1255	
Order extending time to December 14, 1934 for lodging narrative statement of evidence and filing praecipe and to December 26, 1934 for filing transcript of record in United States Circuit Court of Appeals (omitted in printing)	1256	
Stipulation extending time to December 21, 1934, for filing praecipe and lodging narrative statement of evidence (omitted in printing)	1257	
Order granting stipulation extending time to December 21, 1934 for filing praecipe and lodging narrative statement of evidence (omitted in printing)	1257	
Order extending time to December 31, 1934 for lodging narrative form of testimony and filing praecipe and to January 25, 1935, for filing transcript of record in United States Circuit Court of Appeals (omitted in printing)	1258	
Order extending time to January 14, 1935 for lodging narrative form of testimony and filing praecipe (omitted in printing)	1258	
Order extending time to January 28, 1935 for lodging narrative form of testimony and filing praecipe and to February 23, 1935 for filing transcript of record in United States Circuit Court of Appeals (omitted in printing)	1259	
Order extending time to February 18, 1935 for lodging the narrative form of testimony and filing praecipe (omitted in printing)	1260	
Order extending time to February 25, 1935 for lodging narrative form of testimony and filing praecipe and to March 25, 1935, for filing transcript of record in United States Circuit Court of Appeals (omitted in printing)	1261	
Order extending time to March 15, 1935 for filing praecipe (omitted in printing)	1261	
Order extending time to April 15, 1935 for filing praecipe and to April 25, 1935 for filing transcript of record in United States Circuit Court of Appeals (omitted in printing)	1262	

Record from D. C. U. S., Northern District of Ohio—Continued	Original	Print
Order extending time to May 6, 1935 for filing praecipe and to May 16, 1935 for filing transcript of record in United States Circuit Court of Appeals (omitted in printing)	1263	
Order extending time to June 15, 1935 for filing transcript of record in United States Circuit Court of Appeals (omitted in printing)	1263	
Order extending time to August 15, 1935 for filing transcript of record in United States Circuit Court of Appeals (omitted in printing)	1264	
Order extending time to August 31, 1935 for filing transcript of record in United States Circuit Court of Appeals (omitted in printing)	1265	
Order extending time to September 30, 1935 for filing transcript of record in United States Circuit Court of Appeals (omitted in printing)	1265	
Stipulation that appeals in causes Nos. 4045, 4046 and 4047 be consolidated in one printed transcript of record, that exhibits used therein may be used in each of said causes and that repetition of similar pleadings in each be eliminated (omitted in printing)	1266	
Order consolidating appeals in one printed transcript of record, that exhibits used therein may be used in each of said causes, and further ordering elimination of repetition of similar pleadings in each cause	1267	520
Stipulation re digest of exhibits	1267	521
Order granting stipulation re digest of exhibits	1268	522
Praecipe for record	1269	522
Defendants' motion for leave to add to the record in the above-entitled case defendants' counter praecipe and certain letters (omitted in printing)	1273	
Order denying motion of defendants for leave to add to record defendants' counter praecipe and certain letters (omitted in printing)	1277	
Petition to supply last eight pages missing from plaintiffs' Exhibit 13 in the above cause on appeal (omitted in printing)	1278	
Order granting leave to supply last eight pages of plaintiffs' Exhibit No. 13 (omitted in printing)	1278	
Defendants' counter praecipe...(omitted in printing)..	1279	
Order settling contents of record (omitted in printing)..	1279	
Order for withdrawal of exhibits	1280	526
Stipulation re certification of record	1281	527

Plaintiffs' Exhibits

Nos.		Original	Print
2.	U. S. Patent No. 1,815,733, July 21, 1931, to E. J. Gulick (patent in suit)	1283	528
3.	U. S. Patent No. 1,763,523, June 10, 1930, to F. Jardine (patent in suit)	1291	537

Record from D. C. U. S., Northern District of Ohio—Continued

Plaintiffs' Exhibits—Continued

Nos.		Original	Print
4.	U. S. Patent No. 1,655,968, January 10, 1928, to H. E. Maynard (patent in suit)	1299	545
5.	U. S. Patent No. 1,256,265, February 12, 1918, to V. E. Schmiedeknecht (patent in suit)	1305	550
6.	U. S. Patent No. 1,402,309, January 3, 1922, to L. P. Mooers (patent in suit)	1309	554

Stipulated Digest of Assignments of Patents in Suit (Offering of Assignments Omitted from Narrative):

Gulick Patent No. 1,815,733

2-A.	Edward J. Gulick to Packard Motor Car Co. (omitted in printing)	1321	
2-B.	Packard Motor Car Co. to The Cleveland Trust Co. (omitted in printing)	1321	

Jardine Patent No. 1,763,523

3-A.	Frank Jardine to The Aluminum Castings Co.	1321	563
3-B.	The Aluminum Castings Co. to Aluminum Manufactures, Inc.	1321	563
3-C.	Aluminum Manufactures, Inc. to Aluminum Co. of America	1321	563
3-D.	Aluminum Co. of America to The Cleveland Trust Co.	1322	563

Maynard Patent No. 1,655,968

4-A.	Howard E. Maynard to Chrysler Corporation (omitted in printing)	1322
4-B.	Chrysler Corporation to Aluminum Manufactures, Inc. (omitted in printing)	1322
4-C.	Aluminum Manufactures, Inc. to Aluminum Co. of America (omitted in printing)	1322
4-D.	Aluminum Co. of America to The Cleveland Trust Company (omitted in printing)	1322

Schmiedeknecht Patent No. 1,256,265

5-A.	Victor E. Schmiedeknecht to Frank J. Kent (omitted in printing)	1323
5-B.	Warranty and guaranty by Victor E. Schmiedeknecht (omitted in printing)	1323
5-C.	Frank J. Kent to Bohn Aluminum and Brass Corp. (omitted in printing)	1323
5-D.	Bohn Aluminum & Brass Corp. to The Cleveland Trust Co. (omitted in printing)	1323

Record from D. C. U. S., Northern District of Ohio—Continued

Plaintiffs' Exhibits—Continued

Nos.		Original	Print
7.	Instruction sheet to purchasers of Exhibit No. 1.	1325	
11.	Circular letter of Sterling Products Corporation (formal offer not included in narrative).....	1327	565
13.	Tabulation as to sales produced by Whitney.....	1328	565
15.	Drawing of cross-section of cylinder and piston wall (omitted in printing).....	1333	
16.	Drawing of cross-section of cylinder and piston wall (magnified) (omitted in printing).....	1335	
21.	Blueprint D-2376X of Defendants' 3-N Exhibit..	1337	570
22.	Blueprint D-2460X of Defendants' 3-M Exhibit..	1339	570
25.	Consent decree, Simmons case.....	1341	571
26.	Conveyance, declaration of trust and agreement between L. P. Mooers and George B. Pitts and The Cleveland Trust Co., dated March 7, 1922..	1345	575
28.	Bill of sale, Annlex to Gulick (omitted in printing)	1358	
29.	Sketch by Randall of Gulick piston (omitted in printing)	1359	
31.	Cross-section drawing Gulick sleeve valve motor (omitted in printing)	1361	
32.	Detail of piston of preceding exhibit.....	1363	588
35-A.	Sketch by Winchester of Gulick piston (marked for identification, 638) (omitted in printing)..	1365	
35-B.	Sketch by Winchester of Gulick piston (marked for identification, 638) (omitted in printing)...	1367	
35-C.	Sketch by Winchester of Gulick piston (marked for identification, 638) (omitted in printing)..	1369	
35-D.	Sketch by Winchester of Gulick piston (marked for identification, 638) (omitted in printing)..	1371	
35-E.	Sketch by Winchester of Gulick piston (marked for identification, 638) (omitted in printing)...	1373	
36.	Gulick 1911 sketch (identified, 701) (omitted in printing)	1375	
37.	Gulick written description (identified, 702) (omitted in printing)	1377	
38a.	Supplemental contract between The Cleveland Trust Co. and Aluminum Co. of America, dated April 26, 1924	1365	589
38b.	License agreement between The Cleveland Trust Co. and Aluminum Co. of America.....	1381	591
	Exhibit A to license agreement (agreement between The Cleveland Trust Co. and Nordyke & Marmon Co., dated April 23, 1920).....	1393	602
38c.	License agreement between Walker M. Levett Co., W. M. Levett Corp., Walker M. Levett and The Cleveland Trust Co., dated April 11, 1924..	1397	605
38d.	License agreement between The National Piston Co., Gustave E. Franquist, James E. Diamond and The Cleveland Trust Co., dated April 11, 1924	1403	608

Record from D. C. U. S., Northern District of Ohio—Continued

Plaintiffs' Exhibits—Continued

Nos.		Original	Print
38e.	License agreement between Kant-Skore Piston Co. and The Cleveland Trust Co. dated April 11, 1924	1408	612
39a.	Letter from Aluminum Co. of America to The Cleveland Trust Co., dated September 19, 1927.	1412	616
39b.	Letter from Aluminum Co. of America to The Cleveland Trust Co., dated October 12, 1927...	1413	617
39c.	License agreement between The Cleveland Trust Co. and Bohn Aluminum & Brass Corp., dated September 15, 1927, with Lists A and B attached	1414	617
	List A	1426	628
	List B	1427	629
39d.	Letter from Aluminum Co. of America to The Cleveland Trust Co., dated September 19, 1927.	1428	630
39e.	Letter from Aluminum Co. of America to The Cleveland Trust Co., dated April 26, 1928.....	1429	631
39f.	License agreement between The Cleveland Trust Co. and Bohn Aluminum & Brass Corp., dated April 25, 1928.....	1430	632
39g.	Letter from Aluminum Co. of America to The Cleveland Trust Co., dated December 24, 1929..	1434	634
40.	Agreement between Bohn Aluminum & Brass Corporation and The Cleveland Trust Co., dated October 12, 1927 under Schmiedeknecht Patent No. 1,256,265	1435	635
42a.	Franklin Weekly Engineering Report for the Week Ending October 5, 1918.....	1438	638
42b.	Franklin Weekly Engineering Report for the Week Ending July 20, 1918.....	1439	639
42c.	Franklin Weekly Engineering Report for the Week Ending May 3, 1919.....	1440	640
44.	Letter to E. C. Long from Franklin Mfg. Co., dated May 9, 1918.....	1445	641
45.	Letter to E. C. Long from Franklin Automobile Co., dated April 17, 1918.....	1446	641
44.	Gulick sketch made in court of first sketch of 1911 (identified, 701) (omitted in printing)....	1447	
45.	Blueprint of Standard Excelsior Motor (identified, 704) (omitted in printing).....	1449	
46.	Blueprint P-2912	1451	642
50.	Blueprint of Excelsior motorcycle piston (identified, 709) (omitted in printing).....	1453	
51.	Gulick sketch made in court of piston made by casting of Rockhoff (omitted in printing).....	1455	
52.	Letter, Packard Motor Car Co. to E. J. Gulick, dated March 27, 1916 (omitted in printing)....	1457	

Record from D. C. U. S., Northern District of Ohio—Continued

Plaintiffs' Exhibits—Continued

Nos.		Original	Print
53.	Letter, E. J. Gulick to Packard Motor Car Co., dated April 1, 1916 (omitted in printing)	1459	
54.	Letter, E. J. Gulick to Packard Motor Car Co., dated December 4, 1916 (omitted in printing)	1460	
55.	Letter, Packard Motor Car Co. to E. J. Gulick, dated February 28, 1917 (omitted in printing)	1461	
56.	Letter, E. J. Gulick to Packard Motor Car Co., dated May 8, 1917 (omitted in printing)	1462	
57.	Letter, E. J. Gulick to Packard Motor Car Co., dated March 26, 1917 (omitted in printing)	1463	
60.	Picture of Renault Type Car driven by Gulick in 1911 (omitted in printing)	1465	
62.	Gulick Exhibit No. 11 in Interfences 49,569, 49,570 and 49,571 (omitted in printing)	1467	
63.	Letter, Ray Stewart Gehr to E. J. Gulick, dated August 22, 1923 (identified, 811) (omitted in printing)	1469	
64.	Letter, E. J. Gulick to Ray Stewart Gehr, dated August 23, 1923 (identified, 811) (omitted in printing)	1471	
65.	Gulick deposition on Interferences 49,569, 49,570 and 49,571, pages 40 to 103, inclusive (omitted in printing)	1472	
	Index of exhibits showing both interference and transcript numbers of exhibits (omitted in printing)	1472	
66.	Patent Office list of applications of Elmer C. Long filed in Patent Office	1452	642
67-B.	Opinion of examiner in Interference No. 49,569	1533	642
67-C.	Opinion of Board in Interference No. 49,569 (omitted in printing)	1538	
68-A.	Opinion of examiner in Interference No. 49,575 (omitted in printing)	1541	
68-B.	Opinion of Board in No. 49,575 (omitted in printing)	1544	
68-C.	Opinion of Court of Appeals of District of Columbia in Interference No. 49,575 (omitted in printing)	1546	
69-A(1).	Opinion of law examiner in Interference No. 49,570 (omitted in printing)	1548	
69-A(2).	Opinion of examiner of interferences in Interference No. 49,570 (omitted in printing)	1551	
69-B(1).	Petition for rehearing in Interference No. 49,570 (omitted in printing)	1554	
69-B(2).	Opinion of Board in Interference No. 49,570 (omitted in printing)	1556	
69-B(3).	Opinion of the Board of Appeals in Interference No. 49,570 (omitted in printing)	1558	

Record from D. C. U. S., Northern District of Ohio—Continued

Plaintiffs' Exhibits—Continued

Nos.		Original	Print
69-C.	Opinion of the Court of Customs and Patent Appeals in Interference No. 49,570 (omitted in printing)	1562	
70-A.	Opinion of the examiner in Interference No. 49,571 (omitted in printing)	1565	
70-B.	Opinion of the Board of Interference No. 49,571 (omitted in printing)	1570	
74.	Drawing showing dimensions of Defendants' Exhibit Monckmeier 3-V (omitted in printing)	1573	
75.	Drawing showing dimensions of Defendants Exhibit Monckmeier 3-W (omitted in printing)	1575	
84.	Ruling of examiner in abandoned application of Ray E. Day for patent (omitted in printing)	1577	
85.	Certified copy of the drawings of the abandoned application of Ray E. Day, filed January 10, 1923, Serial No. 611,698 (omitted in printing)	1579	

Defendants' Exhibits

A.	Drawing produced by Venner of Long 1916 piston.	1585	646
C.	Two paragraphs from Service Department Bulletin, Sheet No. 262, April 8, 1920, of Franklin Automobile Co., entitled "Long Type Pistons"	1587	647
D.	Seven paragraphs from Service Department Bulletin, Sheet No. 289, November 11, 1920, of Franklin Automobile Co., entitled "New Design for Series Nine"	1588	647
H.	Article from Franklin Service Bulletin No. 348, April 18, 1932, of Franklin Automobile Co., entitled "The Oval Type Piston"	1589	648
I.	Article from page 1, Franklin Service Bulletin No. 369, February 20, 1923, of Franklin Automobile Company, entitled "Piston and Wrist Pin Knocks," and drawing on page 2, entitled "Drill Jig for Extra Oil Holes in Piston"	1591	650
J.	Forfeited and abandoned application of William M. Venner for improvement in pistons, filed April 12, 1920, Serial No. 373,340	1595	651
K.	Venner drawing, February 16, 1920	1603	656
L.	Letter from George J. Oltsch to Wm. M. Venner, dated September 22, 1920	1605	657
M.	Photostat of page 149, showing cut only in "The Gasoline Automobile," by Heldt, Vol. I (omitted in printing)	1607	
N.	Article from pages 8 and 9 of Manual for Trouble Shooters of Franklin Automobile Company, entitled "Piston Slap"	1609	657

Record from D. C. U. S., Northern District of Ohio—Continued

Defendants' Exhibits—Continued

Nos.		Original	Print
O.	Drawing produced by Chadwick, Long 6-slot piston	1611	659
S.	Tracing of "Oldsmobile Six" piston produced by Chadwick	1613	660
T-1.	Tracing produced by Chadwick of Long pistons for Ford, Model T Car	1615	661
T-2.	Tracing produced by Chadwick of Long pistons for Essex Car	1617	662
T-3.	Tracing produced by Chadwick of Long pistons for Duesenberg Car	1619	663
U.	Weems' advertisement on page 124 of "Motor Age" for July 7, 1921 (omitted in printing)	1621	
W.	Photostat of trunk piston added to by Chadwick to show T-Slot, Long piston	1623	664
X.	Digest of Defendant's Exhibit X, agreement dated September 20, 1919 between E. C. Long and M. K. Weems	1625	665
Y.	Photostat of drawing by Stellman, Long 1916 Piston (identified, 452)	1627	666
Z.	L. M. Steilman's Report, dated March 18, 1919, entitled "Test on Long Pistons"	1629	667
AA.	Digest of Defendants' Exhibit AA, license agreement dated March 20, 1919, between E. C. Long and Franklin Mfg. Co.	1632	669
CC'(1).	Blue print D-793X of The Aluminum Castings Co. (Drawing of proposed design of piston for H. H. Franklin Mfg. Co.)	1633	671
CC'(2).	Blueprint D-944X of The Aluminum Castings Co. (drawing of proposed design of piston for H. H. Franklin Mfg. Co.)	1634	672
CC'(3).	Blueprint D-960X of The Aluminum Castings Co. (drawing of proposed design of piston for H. H. Franklin Mfg. Co.)	1635	673
DD.	Sketch of Long pistons seen by Royalty in 1913	1637	674
EE.	Sketch of Long piston by Royalty in February, 1918	1638	675
FF.	Sketch of other views of piston shown in Exhibit EE	1639	676
GG.	Photostat of pattern record card marked D-8764	1640	677
HH.	Photostat of pattern record card marked A-640	1641	678
II.	Photostat of pattern record card marked B-122	1642	679
JJ.	Photostat of pattern record card marked H-4	1643	680
KK.	Photostat of pattern record card marked C-123	1644	681
LL.	Card bearing notation, "Use Patt. A-640 as per instructions on core box"	1645	
MM.	Card bearing designation, "Patt. No. A-641"	1646	683

Record from D. C. U. S., Northern District of Ohio—Continued

Defendants' Exhibits—Continued

Nos.		Original	Print
3-S.	Page 274 of "The Automobile Engineer" of October, 1918, Vol. VIII, No. 119	1647	684
3-X.	Letter dated June 20, 1916, with Monckmeier photo (omitted in printing)	1648	
4-A.	Stellman sketch of Maynard patent structure	1649	685
4-B.	Photostat of roots superimposed on Ebbs (omitted in printing)	1651	
4-C.	Decision of law examiner, dated April 4, 1924, in Interference No. 49,569 (omitted in printing)	1653	
4-D.	Decision of law examiner, dated April 4, 1924, in Interference No. 49,574 (omitted in printing)	1659	
4-E.	Decision of law examiner, dated April 4, 1924, in Interference No. 49,580 (omitted in printing)	1661	
4-F.	Decision of law examiner, dated April 7, 1925, in Interference No. 49,575 (omitted in printing)	1663	
4-G.	Pages 362, 363 and 364 of "Automotive Industries" for January 29, 1920	1667	686
4-H.	Prior art patents	....	689

U. S. Patents

No. 700,309, May 20, 1902, H. E. Ebbs (omitted in printing)	1671	
No. 908,569, January 5, 1909, F. D. Howe (omitted in printing)	1675	
No. 1,031,212, July 2, 1912, E. Van Bever	1679	
No. 1,092, 870, April 14, 1914, E. O. Spillman and L. P. Mooers	1683	693
No. 1,153,902, September 21, 1915, G. E. Franquist	1687	697
No. 1,174,092, March 7, 1916, W. L. Schoengarth (omitted in printing)	1693	
No. 1,195,936, August 22, 1916, C. White (omitted in printing)	1699	
No. 1,229,540, June 12, 1917, E. O. Spillman (omitted in printing)	1703	
No. 1,279,184, September 17, 1918, J. G. Vincent (omitted in printing)	1707	
No. 1,283,021, October 29, 1918, C. C. Anderson (omitted in printing)	1713	
No. 1,294,833, February 18, 1919, H. R. Ricardo	1717	702
No. 1,325,176, December 16, 1919, A. Spillman (omitted in printing)	1723	
No. 1,395,441, November 1, 1921, E. C. Long	1727	708
No. 1,489,499, April 8, 1924, E. C. Long	1731	712
No. 1,872,772, August 23, 1932, E. C. Long	1735	716

Record from D. C. U. S., Northern District of Ohio—Continued

British Patents

	Original	Print
No. 19,559 of 1890, James Roots (omitted in printing)	1739	
No. 17,256, of 1907, John Vernon Pugh (omitted in printing)	1743	
No. 6,826 of 1912, William Frederick Rainforth (omitted in printing)	1751	
No. 12,772 of 1914, Samuel Octavius Ferry (omitted in printing)	1755	
Specification 140,988, Ernest Walter Hives (omitted in printing)	1759	

French Patents

No. 468,595 of 1914 Chenard and Walcker (omitted in printing)	1763	
(Translation of foregoing) (omitted in printing)	1767	
No. 434,147 of 1911, M. Chas.-Emile Serex (omitted in printing)	1769	
(Translation of foregoing) (omitted in printing)	1773	
No. 16,362 of 1912, M. Chas.-Emile Serex (omitted in printing)	1777	
(Translation of foregoing) (omitted in printing)	1781	

German Patent

No. 176,988 of 1906, Otto Lietzenmayer (omitted in printing)	1785	

Additional U. S. Patents

Nos.			
	No. 1,557,625, October 20, 1925, L. M. Stellman	1789	720
	No. 1,842,022, January 19, 1932, S. D. Hartog	1797	726
	No. 1,499,073, June 24, 1924, L. H. Pomeroy	1803	731
4-I.	Royalty Report of June 30, 1927 of The Cleveland Trust Co. (omitted in printing)	1809	
4-J.	Pages 602, 603 and 604 from "The Automobile" of March 12, 1914 (omitted in printing)	1827	
4-K.	Pages 558, 559 and 560 from "The Automobile" of March 5, 1914 (omitted in printing)	1831	
4-L.	File wrapper and contents of Gulick Patent (No. 1,815,733) in Suit	1835	737
4-L_1.	File wrapper and contents of Mooers Patent (No. 1,402,309) in Suit (omitted in printing)	1977	
4-L_2.	File wrapper and contents of Jardine Patent (No. 1,763,523) in Suit	2027	747

Record from D. C. U. S., Northern District of Ohio—Continued

Defendants' Exhibits—Continued

Nos.		Original	Print
4-L_3.	File wrapper and contents of Schmiedknecht Patent (No. 1,256,265) in Suit (omitted in printing)	2129	
4-L_4.	File wrapper and cnotents of Maynard Patent (No. 1,655,968) in Suit (omitted in printing)	2147	
4-M.	Page 555 of "The Horseless Age" for April 8, 1914 (omitted in printing)	2229	
4-N.	Page 1081 of "The Horseless Age" for December 24, 1913 (omitted in printing)	2231	
4-O.	Pages 85 and 86 of "The Automobile Engineer" for March 12, 1914 (omitted in printing)	2233	
4-P.	Postal showing Staver Car (omitted in printing)	2237	
4-Q.	D'Vorsky sketch of Monckmeier piston (omitted in printing)	2239	
4-R.	Stipulated digest of Defendants' Exhibit 4-R, The Anamosa Journal, Anamosa, Iowa, Thursday, June 10, 1915 (omitted in printing)	2241	
4-S.	Same as Plaintiff's Exhibit 38b	1381	591
4-T.	Same as Plaintiff's Exhibit 38	1378	589
4-U.	Same as Plaintiff's Exhibit 39	1412	616
4-V.	Same as Plaintiff's Exhibit 40	1435	635
4-X.	List of patents owned by The Cleveland Trust Co. under trust	2241	844
4-Y.	Bill of complaint and answer in Case No. 27-32 in the United States District Court for the Southern District of New York, The Cleveland Trust Co. vs. The National Piston Co., Inc.	2243	846
	Answer (omitted in printing)	2254	
	Final decree	2259	851
4-Z.	Bill of complaint in Case No. 535 in the United States District Court for the Eastern District of Michigan, The Cleveland Trust Co. vs. E. C. Long Piston Co. and E. C. Long	2261	853
5-C.	Page 250 of "The Motor World" for December 28, 1911	2271	864
5-D.	Page 133 of "Automobile Trade Journal", April, 1916 (omitted in printing)	2273	
5-E.	Page 504 of "Automobile Engineer" for December, 1920 (omitted in printing)	2275	
5-F_1 to 5-F_{12}.	Stipulated digests of various publications:		
	5-F_1 to 5-F_6 (omitted in printing)	2277	
	5-F_7 to 5-F_{12} (omitted in printing)	2278	
5-G.	Stipulated digest of certificate from Secretary of State for State of Illinois, Staver Motor Car Co. (omitted in printing)	2279	

Record from D. C. U. S., Northern District of Ohio—Continued

Defendants' Exhibits—Continued

Nos.		Original	Print
5-H_1	Stipulated digest of the decision of the law examiner in Interference No. 45,351	2279	865
5-H_2	Stipulated digest of the decision of the examiner in Interference No. 45,351	2279	865
5-H_3	Stipulated digest of the decision of the Board of Appeals in Interference No. 45,351	2279	865
5-I.	Books of account pages V-1, V-2, V-4	2280	865
	Bill of complaint in Case No. 3510 in the United States District Court for the Northern District of Ohio, The Cleveland Trust Co. and Chrysler Corp. vs. The Simmons Mfg. Co. and Sterling Products Corp.	2285	870
5-J.	Letter dated October 17, 1932 from Anna Landon Duke to J. H. Bruninga (omitted in printing)	2308	
5-K_1.	Letter dated May 4, 1915 from Walter L. Schoengarth to Louis Bagger & Co. (omitted in printing)	2304	
5-K_2(1).	Tracing of Schoengarth piston (omitted in printing)	2305	
5-K_2(2).	Tracing of Schoengarth piston (omitted in printing)	2307	
5-K_3.	Three pages description by Schoengarth of "The Adjustable Gas Engine Piston" (omitted in printing)	2309	
5-K_4.	Letter dated May 13, 1915 from Louis Bagger & Co. to W. L. Schoengarth (omitted in printing)	2310	
5-K_5.	Letter dated May 22, 1915 from W. L. Schoengarth to Louis Bagger & Co. (omitted in printing)	2311	
5-K_6.	Letter dated May 24, 1915 from Louis Bagger & Co. to W. L. Schoengarth (omitted in printing)	2311	
5-K_7.	Letter dated July 29, 1914 from W. L. Schoengarth to Louis Bagger & Co. (omitted in printing)	2312	
5-K_8.	Letter dated August 5, 1915 from Louis Bagger & Co. to W. L. Schoengarth (omitted in printing)	2313	
5-K_9.	Certified copy of application papers of the Schoengarth Patent No. 1,174,092 (omitted in printing)	2314	
5-K_{11}.	Letter dated April 2, 1917 from Louis Bagger & Co. to Walter Schoengarth (omitted in printing)	2325	
5-K_{12}.	Envelope sent to Schoengarth at Cleveland (omitted in printing)	2327	
5-M.	List of patents to Packard Motor Company (discussed, 889) (omitted in printing)	2329	

Record from D. C. U. S., Northern District of Ohio—Continued

CASE No. 4046

	Original	Print
Caption .....(omitted in printing)..	2331	
Notes re trial papers, orders, testimony, exhibits and appeal papers (omitted in printing) .....2332 to	2342	
Assignments of error	2365	888
Supplementary praecipe .....(omitted in printing)..	2368	

CASE No. 4047

Caption .....(omitted in printing)..	2343	
Notes re trial papers, orders, testimony, exhibits and appeal papers (omitted in printing).....2344 to	2354	
Assignments of error.....	2371	893
Supplementary praecipe.....(omitted in printing)..	2376	

Orders extending time to October 10, 1935 for filing transcript of record in United States Circuit Court of Appeals (omitted in printing)	2355	
Certificate of clerk	2357	887

Proceedings in U. S. C. C. A., Sixth Circuit.....	2379	899
Decree, Case No. 7223, October 8, 1937	2379	889
Decree, Case No. 7224, October 8, 1937	2379	889
Decree, Case No. 7225, October 8, 1937	2380	900
Opinion, Simons, J., October 8, 1937.....	2381	901
Decree, Case No. 7223, October 6, 1939.....	2395	915
Decree, Case No. 7224, October 6, 1939.....	2395	915
Decree, Case No. 7225, October 6, 1939.....	2395	915
Opinion, Simons, J., October 6, 1939.....	2396	916
Petition for rehearing	2407	927
Order on petition for rehearing	2410	930
Order amending mandate	2410	930
Clerk's certificate	2411	931
Orders extending time within which to file petition for writ of certiorari	2412	932
Orders allowing certiorari	2414	935

BLANK PAGE

BLANK PAGE

[fol. 1]

CAPTION

[Case No. 4045]

UNITED STATES OF AMERICA, NORTHERN DISTRICT OF OHIO, EASTERN DIVISION, SS.

Record of the proceedings of the District Court of the United States within and for the Eastern Division of the Northern District of Ohio, in the causes and matters hereinafter stated, the same being finally disposed of at a regular term of said court begun and held at the City of Cleveland, in said district, on the first Tuesday in April, being the third day of said month, in the year of our Lord one thousand nine hundred and thirty-four and in the one hundred and fifty-eighth year of the Independence of the United States of America, to-wit, on Friday, the 27th day of July, A. D. 1934.

Honorable Paul Jones, United States District Judge.

No. 4045 Equity

THE CLEVELAND TRUST COMPANY, CHRYSLER CORPORATION,

vs.

THE SCHRIBER-SCHROTH COMPANY

Said action was commenced on the 17th day of October, A. D. 1931 and proceeded to final disposition at the term and day above written and during the progress thereof pleadings and papers were filed, process was issued and returned and orders of the court were made and entered in the order and on the dates hereinafter stated, to-wit:

[fol. 2] IN UNITED STATES DISTRICT COURT

[Case No. 4045]

ORIGINAL BILL OF COMPLAINT—Filed October 17, 1931

To the Honorable Judges of the United States District Court for the Northern District of Ohio, Eastern Division:

Plaintiffs, for their Bill of Complaint, allege:

1

That Plaintiff, The Cleveland Trust Company, is a corporation organized and existing under the laws of the State

of Ohio, having its principal place of business at Cleveland, State of Ohio.

That Plaintiff, Chrysler Corporation, is a corporation organized and existing under the laws of the State of Delaware, having its principal place of business at Highland Park, State of Michigan.

2

That Defendant, The Schriber-Schroth Company of Akron, Ohio, is a corporation organized and existing under the laws of the State of Ohio and is a citizen and inhabitant thereof, having a regular and established place of business at 61 West Market Street, Akron, County of Summit and State of Ohio.

That Defendant, Sterling Products Corporation of St. Louis, Missouri, is a corporation duly organized and existing under the laws of the State of Missouri and has a regular and established place of business at 2914 North Market Street in the City of St. Louis, County of St. Louis, and State of Missouri.

3

This suit is brought under the patent laws of the United States, and seeks injunctive and other relief against the defendants and each of them for infringements and contributory infringements committed by each and both defendants within this Judicial District and elsewhere within the United States.

4

That heretofore and prior to the 2nd day of June, 1917, Louis P. Mooers, a citizen of the United States, then residing at Cincinnati, Hamilton County, State of Ohio, was the [fol. 3] original, first and true inventor of certain new and useful improvements in Pistons for Internal Combustion Motors, fully described in Letters Patent of the United States No. 1,402,309, hereinafter mentioned, which invention or improvement was not known or used by others in this country or patented or described in any printed publication in this or any foreign country, prior to his invention thereof, or more than two years prior to his application for said Letters Patent; had not been in public use or on sale in this country for more than two years prior to said application; had not been abandoned to the public, and had not

been patented or caused to be patented by him or his legal representatives or assigns in any foreign country upon an application filed more than twelve months prior to the filing of his application for Letters Patent of the United States therefor; that the said Louis P. Mooers made due application to the Commissioner of Patents of the United States in accordance with the then existing Acts of Congress, for Letters Patent of the United States for said invention and improvement.

5

That by an instrument in writing duly executed and delivered by said Louis P. Mooers and duly recorded in the United States Patent Office in Liber P-103, page 133 of the Transfers of Patents, said Louis P. Mooers assigned an undivided half of the entire right, title and interest in, and to said invention and improvement and in and to said application for Letters Patent to George B. Pitts of Cleveland, Ohio, and authorized and requested the Commissioner of Patents to issue the Letters Patent upon said application and for said invention and improvement to said George B. Pitts and Louis P. Mooers; and by said instruments in writing specified in Article 3 of this Bill as recorded in Liber Q-107, pages 336 and 339 of the Transfers of Patents, said George B. Pitts and Louis P. Mooers respectively each assigned his undivided one-half of the entire right, title and interest in, to and under said Letters Patent of the United States No. 1,402,309 to your Orator, The Cleveland Trust Company, and authorized and requested the Commissioner of Patents to issue the Letters Patent upon said application and for said invention and improvement to said The Cleveland Trust Company; whereby your Orator became vested with and holds the entire right, title and interest in, [fol. 4] to and under said Letters Patent No. 1,402,309, as will more fully and at large appear upon production in Court of the said Letters Patent and the assignments aforesaid.

6

That heretofore and prior to the 14th day of July, 1917, Victor E. Schmiedeknecht, a citizen of the United States then residing at Louisville in the County of Jefferson and State of Kentucky, was the first and true inventor of certain new and useful improvements in Pistons, fully described in Letters Patent of the United States No. 1,256,265, herein-

after mentioned, which invention and improvement was not known or used by others in this country, or patented or described in any printed publication in this or any foreign country, prior to his invention thereof, or more than two years prior to his application for said Letters Patent; had not been in public use or on sale in this country for more than two years prior to said application; had not been abandoned to the public, and had not been patented or caused to be patented by him or his legal representatives or assigns in any foreign country upon an application filed more than twelve months prior to the filing of his application for Letters Patent of the United States therefor; that the said Victor E. Schmiedeknecht made due application to the Commissioner of Patents of the United States in accordance with the then existing Acts of Congress, for Letters Patent of the United States for said invention and improvement, and having in all respects complied with the conditions and requirements of said Acts of Congress, on the 12th day of February, 1918, Letters Patent of the United States No. 1,256,265, signed, sealed and executed in due form of law for the said invention or improvement, were issued and delivered unto said Victor E. Schmiedeknecht, his successors and assigns, for the term of seventeen years from said 12th day of February, 1918, the sole and exclusive right to make, use and sell to others to be used, throughout the United States and the territories thereof, the aforesaid invention or improvement, all as by said Letters Patent or a duly authenticated copy thereof in Court to be produced and shown to Your Honors will more fully and at large appear.

[fol. 5] 7

That subsequent to the granting of the aforesaid Letters Patent No. 1,256,265, by an instrument in writing that was duly recorded in the United States Patent Office on or about the 16th day of August, 1927 in Liber F-131, page 79 of the Transfers of Patents, said Victor E. Schmiedeknecht assigned the entire right, title and interest in, to and under said Letters Patent of the United States No. 1,256,265, together with the right to sue for, collect, and retain damages and profits for past infringement under said Letters Patent to one Frank Kent of New York City; and, whereas this assignment was further amplified by further warranty and guarantee that was also recorded in the United States Patent

Office on or about the 16th day of August, 1927 in Liber P-131, page 81 of the Transfers of Patents; whereby said Frank Kent, his successors and assigns, became vested with the entire right, title and interest in, to and under said Letters Patent of the United States No. 1,256,265, together with the right to sue for, collect, and retain damages and profits for past infringements of said Letters Patent.

8

That by an instrument in writing dated October 12, 1927 and duly recorded in the United States Patent Office in the Transfers of Patents, said Frank Kent assigned the entire right, title and interest in, to and under said Letters Patent of the United States, together with the right to sue, collect, and retain damages and profits for past infringement, to Bohn Aluminum & Brass Corporation of Detroit, Michigan, its successors and assigns.

9

That said Bohn Aluminum & Brass Corporation, by an instrument in writing dated on or about October 31st, 1927, and recorded in the United States Patent Office in Liber C-133, page 618 of the Transfers of Patents, assigned to Your Orator, The Cleveland Trust Company, its successors and assigns, the entire right, title and interest in, to and under said Letters Patent, together with the right to sue for, collect and retain damages and profits for past infringements of said Letters Patent; whereby plaintiff, The Cleveland Trust Company, became vested with and now holds the entire right, title and interest in, to and under the aforesaid Letters Patent No. 1,256,265, and the right [fol. 6] to sue for, collect, and retain damages and profits for past infringement of said Letters Patent, as will more fully and at large appear upon production in this Court of the assignments aforesaid or duly authenticated copies thereof.

10

That heretofore, and prior to the third day of January, 1921, Howard E. Maynard, then residing at Detroit, in the County of Wayne and State of Michigan, was the original, first and true inventor of certain new and useful improvements in Pistons fully described in Letters Patent of the

United States No. 1,655,968 hereinafter mentioned, which invention or improvement was not known or used by others in this country, or patented or described in any printed publication in this or any foreign country before his said invention or discovery thereof, or more than two years prior to his application for Letters Patent therefor, and had not been in public use or on sale in this country for more than two years prior to his application for Letters Patent therefor; and had not been patented or caused to be patented by him or his legal representatives or assigns in any foreign country upon an application filed more than twelve months prior to the filing of the application for Letters Patent thereon in this country.

11

That the said Howard E. Maynard, being as aforesaid, the inventor of the said improvement, made application to the Commissioner of Patents of the United States for Letters Patent in accordance with the then existing Acts of Congress, and, having in all respects complied with the conditions and requirements of said Acts of Congress, on the tenth day of January, 1928 Letters Patent of the United States numbered 1,655,968, signed, sealed and executed in due form of law, for the said invention or improvement, were issued to said Chrysler Corporation, a corporation of Delaware, at Highland Park, Michigan, plaintiff, and Aluminum Company of America, a corporation of Pennsylvania, at Pittsburgh, Pa., as assignees each of one-half of the entire right, title and interest in and to said Letters Patent, whereby there was secured to Chrysler Corporation and Aluminum Company of America for the term of seventeen years from the tenth day of January, 1928, the sole and [fol. 7] exclusive right to make, use and sell to others to be used throughout the United States and the territories thereof, the aforesaid invention or improvement, all as by said Letters Patent, or a duly authenticated copy thereof here in Court to be produced and shown unto Your Honors, as will more fully and at large appear.

12

That prior to the filing of this Bill of Complaint, said Aluminum Company of America, by an instrument in writing dated February 23, 1928 and recorded in the Transfers

of Patents in the United States Patent Office as of May 12, 1930 in Liber Z-143, page 283, assigned its undivided one-half interest in the entire right, title and interest in and to said Letters Patent No. 1,655,968 to The Cleveland Trust Company, plaintiff herein, together with the right to sue for and recover damages for past infringements of said Letters Patent, whereby your plaintiff, The Cleveland Trust Company, became vested with and now holds an undivided one-half interest in the entire right, title and interest in, to, and under said Letters Patent No. 1,655,968, as will more fully and at large appear upon production in Court of the assignments aforesaid.

13

That the plaintiff, Chrysler Corporation, is a non-resident and resides without the jurisdiction of this Court and therefore cannot be served with process and made a co-defendant in this cause, and that plaintiff, The Cleveland Trust Company, has advised Chrysler Corporation of the imminent pendency of this case and of the obligation of Chrysler Corporation to join voluntarily in the bringing of this suit, but that Chrysler Corporation has refused or declined to so voluntarily join and that the plaintiff, The Cleveland Trust Company, is without remedy on the Maynard patent unless Chrysler Corporation is joined as a co-plaintiff in this cause, and therefore to prevent a failure of justice and to enable The Cleveland Trust Company to protect its interests herein, the Chrysler Corporation is made a plaintiff herein without its consent.

14

That heretofore and prior to the 11th day of March, 1920, Frank Jardine, a citizen of the United States, then residing [fol. 8] at Cleveland, in the County of Cuyahoga and State of Ohio, was the original, first and true inventor of certain new and useful improvements in Pistons, fully described in Letters Patent of the United States No. 1,763,523, hereinafter mentioned, which invention or improvement was not known or used by others in this country or patented or described in any printed publication in this or any foreign country, prior to his invention thereof, or more than two years prior to his application for said Letters Patent; had not been in public use or on sale in this country for more

than two years prior to said application; had not been abandoned to the public, and had not been patented or caused to be patented by him or his legal representatives or assigns in any foreign country upon an application filed more than twelve months prior to the filing of his application for Letters Patent of the United States therefor; that the said Frank Jardine made due application to the Commissioner of Patents of the United States in accordance with the then existing Acts of Congress, for Letters Patent of the United States for said invention and improvement, and having in all respects complied with the conditions and requirements of said Acts of Congress, and having, by mesne assignments, as will more fully and at large appear upon production in Court of said assignments, assigned his entire right, title and interest in and to said Letters Patent No. 1,763,523 to The Cleveland Trust Company, as Trustee, and having authorized and requested the Commissioner of Patents to issue the Letters Patent upon said application and for said invention and improvements to said The Cleveland Trust Company, on or about the 10th day of June, 1930, Letters Patent of the United States No. 1,763,523, signed, sealed and executed in due form of law, for the said invention or improvement, were issued and delivered to plaintiff, The Cleveland Trust Company, whereby there was secured to it, its successors and assigns, for the term of seventeen years from the said 10th day of June, 1930, the sole and exclusive right to make, use, and sell to others to be used, throughout the United States and the territories thereof, the aforesaid invention or improvement, all as by said Letters Patent or a duly authenticated copy thereof in Court to be produced and shown unto Your Honors, will more fully and at large appear.

[fol. 9] 15

That heretofore and prior to the 30th day of November, 1917, Edward J. Gulick, a citizen of the United States then residing in Mishawaka, County of St. Joseph, and State of Indiana, was the original, first and true inventor of certain new and useful improvements in Pistons, fully described in application for Letters Patent of the United States, Serial No. 204,661, which invention was not known or used by others in this country or patented or described in any printed publication in this or any foreign country, prior to his invention thereof, or more than two years prior to his said

application for Letters Patent therefor; that said invention had not been in public use or on sale in this country for more than two years prior to said application for Letter-Patent, had not been abandoned to the public and had not been patented or caused to be patented by him or his legal representatives or assigns in any foreign country upon an application filed more than twelve months prior to the filing of said application for Letters Patent of the United States; that on or about November 30, 1917, said Edward J. Gulick made due application to the Commissioner of Patents of the United States in accordance with the then existing Acts of Congress, for Letters Patent of the United States for said invention or improvements and, having in all respects complied with the conditions and requirements of said Acts of Congress, on the 21st day of July, 1931, Letters Patent of the United States No. 1,815,733 were signed, sealed and executed in due form of law for the said invention, and were issued and delivered unto Plaintiff, The Cleveland Trust Company, its successors and assigns, as assignee of the entire right, title and interest of said Edward J. Gulick, for the term of seventeen years from said 21st day of July, 1931, thereby granting to it the sole and exclusive right to make, use and sell to others to be used, throughout the United States, its territories and dependencies, the aforesaid invention or improvements, all as by said Letters Patent or a duly authenticated copy thereof in Court to be produced and shown to Your Honor, as will more fully and at large appear.

16

That prior to the grant of aforesaid Letters Patent No. 1,815,733, said Edward J. Gulick assigned to the Packard Motor Car Company of Detroit, Michigan, his entire r'ght, [fol. 10] title, and interest in and to the invention set forth and described in the aforesaid application for Letters Patent Serial No. 204,661 by an instrument in writing dated Nov. 23, 1917 that was duly recorded in the United States Patent Office on or about the 30th day of November, 1917, in Liber J-103, page 468 of the Transfers of Patents; whereby said Packard Motor Car Company of Detroit, Michigan, its successors and assigns became vested with the entire right, title and interest in and to the aforesaid invention and in and to said application for Letters Patent Serial No. 204,661 and in and to any Letters Patent issuing pursuant thereto.

17

That, on or about September 11, 1922 and prior to the grant of aforesaid Letters Patent No. 1,815,733, the Packard Motor Car Company of Detroit, Michigan, assigned to The Cleveland Trust Company of Cleveland, Ohio, its entire right, title and interest in and to the invention set forth and described in the aforesaid application for Letters Patent Serial No. 204,661 and in and to said application for Letters Patent by an instrument in writing dated September 11, 1922 that was duly recorded in the United States Patent Office on or about the 13th day of September, 1922, in Liber S-116, page 485 of the Transfers of Patents, whereby said The Cleveland Trust Company of Cleveland, Ohio, its successors and assigns became vested with, has continuously held and now owns the entire right, title and interest in and to said invention and in and to said application for Letters Patent Serial No. 204,661 and in and to said Letters Patent of the United States No. 1,815,733 that issued pursuant thereto.

18

That the validity of each of the aforesaid Letters Patent has been recognized and acquiesced in by the public generally since the date of issue of each of said patents, except for these defendants and others encouraged by them. At various times said patents have been especially recognized and acquiesced in by parties who have discontinued infringement thereof and who have made due amends to plaintiff. Others have taken licenses under said patents. Substantial and material royalties have been paid to the plaintiff under said patents. The licensees under said patents have manufactured and sold the pistons covered by said patents in great [fol. 11] numbers. These pistons have gone into extensive and successful use. Licensees under said patents have built plants and established organizations for the manufacture and sale of such pistons on the strength of and by reason of their confidence in the patents here in suit.

19

That the plaintiff has duly notified each and both of these defendants of their infringement of each of the aforesaid Letters Patent and has requested them and each of them to desist, but defendants and each of them have continued their infringements in defiance of said notices.

20

These defendants, The Schriber-Schroth Company and Sterling Products Corporation, jointly and severally, subsequent to the grant of said Letters Patent and prior to the filing of this Bill of Complaint and within six years hereof, with full knowledge of each of said Letters Patent and without the consent of plaintiff, The Cleveland Trust Company, but in violation of its rights, and after due notice, has within the Judicial District of this Court and elsewhere within the United States, infringed each of the aforesaid Letters Patent and contributed to the infringement thereof by making and/or causing to be made, by using and/or causing to be used, and selling and/or causing to be sold in this Judicial District and elsewhere within the United States, Pistons for Internal Combustion Engines embodying jointly and severally the inventions of said Letters Patent and in infringement thereof.

That in so infringing, defendants have realized and received great gains and profits which should, and otherwise would have been received by plaintiffs, each and both of them, and defendants, and each and both of them, have correspondingly inflicted on plaintiffs great loss and damage, but to what extent plaintiffs cannot now set forth and therefore pray discovery with respect thereto; that plaintiffs fear and have reason to fear that defendants will continue their aforesaid infringing acts to an even greater extent unless enjoined by this Honorable Court; and defendants, and each of them, have and will thereby induce others to venture to infringe the said Letters Patent aforesaid, to the irreparable injury of plaintiffs.

[fol. 12] 21

That suit was heretofore instituted in this Honorable Court by Plaintiffs in this cause against The Simmons Manufacturing Company of Cleveland, Ohio and Sterling Products Corporation of St. Louis, Missouri, Co-Defendants, for the infringement of the foregoing Letters Patent of the United States by the use and sale of pistons of the same construction that is herein charged to infringe and that a consent decree was entered against defendant, The Simmons Manufacturing Company, on September 25, 1931 and that said The Simmons Manufacturing Company was also enjoined from further using or selling said infringing pistons.

Because of these premises, plaintiffs are without adequate or sufficient remedy at law and therefore bring this suit in equity.

Wherefore, the plaintiffs pray:

First. That a writ of subpoena ad respondum may issue out of and under the seal of this Court requiring each and both of said defendants, The Schriber-Schroth Company and Sterling Products Corporation, to appear and make answer to this Bill of Complaint, but not under oath, answer under oath being hereby expressly waived, to the best and utmost of their knowledge, information and belief and to do and perform such things as to this Court may seem meet and just;

Second. That this Court may grant an injunction, perpetual as well as temporary, enjoining each and both of said defendants, The Schriber-Schroth Company and Sterling Products Corporation, as well as each of the directors, officers, associates, successors, agents, attorneys and employees, and every person acting for or on the behalf of each and/or both of said defendants, from further infringing or contributing to the infringement of any and/or each of said Letters Patent.

Third. That said defendants, The Schriber-Schroth Company and Sterling Products Corporation, and each and both of them, may be required to account before a Master in the usual manner of accountings for the gains, profits and advantages due to and arising out of their aforesaid infringements and contributory infringements herein complained about, as well as the damages sustained by plaintiffs, by [fols. 13-15] reason of said infringements, and that the said damages be tripled.

Fourth. That said defendants, The Schriber-Schroth Company and Sterling Products Corporation, each and both of them, be required to pay over to plaintiffs, the gains and profits so accounted for and also the damages sustained by plaintiffs as the result of said infringements and contributory infringements.

Fifth. That the defendants, each and both of them, be decreed to pay the costs, charges and disbursements of this suit.

Sixth. That the plaintiffs may have such other and further relief as the equity of the case may require, and as to this Honorable Court may seem just and proper.

The Cleveland Trust Company, by R. A. Malm, Vice-President. Chrysler Corporation, by R. A. Malm, Vice-President, The Cleveland Trust Company. Wm. C. McCoy, Solicitor for Plaintiffs.

Duly sworn to by R. A. Malm. Jurat omitted in printing.

* * * * * * *

[fol. 16] IN UNITED STATES DISTRICT COURT

[Case No. 4045]

PLAINTIFF'S BILL OF PARTICULARS—Filed January 8, 1932

Now come the Plaintiffs and, for their Bill of Particulars in response to Section IV B of the motion of Defendant, The Schriber-Schroth Company, and in accordance with the Court Order of December 30, 1931 regarding the aforesaid motion, state as follows:

At the trial of this cause Plaintiffs intend to rely on the following claims of the patents listed as infringed and/or as contributorily infringed by Defendant:

Mooers Patent, No. 1,402,309, Claims 1, 2, 6, 9 and 10.
Schmiedeknecht Patent, No. 1,256,265, Claims 1 and 3.
Maynard Patent, No. 1,655,968, All of the claims.
Jardine Patent, No. 1,763,523, All claims except 3 and 12.
Gulick Patent, No. 1,815,733, Claims 1, 11, 12, 13, 15, 18, 30, 33, 35, 38, 41, 42 and 43.

[fols. 17-20] Plaintiffs intend to rely on pistons like Plaintiffs' Exhibit 1 (submitted herewith) and pistons of the same kind in which the longitudinal slot in the piston skirt is completed for installation in an engine by cutting the longitudinal slot through at the top and bottom of the skirt, as indicated in pencil on the accompanying piston, Plaintiffs' Exhibit 1, as the infringing pistons.

Respectfully submitted, Wm. C. McCoy, Attorney for Plaintiffs.

Service and receipt of copy of foregoing Bill of Particulars acknowledged this — day of January, 1932.

Kwis, Hudson & Kent, Attorneys for Defendant, The Schriber-Schroth Company.

* * * * * * *

[fols. 21-25]

Evans & McCoy

Patent Lawyers

Bulkley Building, Cleveland

May 17, 1930.

Sterling Products Corporation, 2916 North Market Street, St. Louis, Mo.

GENTLEMEN:

You are advised that pistons that you are now offering to the trade infringe the following patents that are owned by The Cleveland Trust Company of Cleveland, Ohio:

			Issued
Mooers-Spillman	Pat.	No. 1,092,870	4/14/14
Franquist	"	No. 1,153,902	9/21/15
Howdeshell	"	No. Re-16,273	2/23/26
(Original)	"	No. 1,473,233	9/ 6/23
Mooers	"	No. 1,402,309	1/ 3/22
Maynard	"	No. 1,655,968	1/10/28

It is our understanding that you have heretofore considered these patents in connection with your business activities and therefore are familiar with them.

The Cleveland Trust Company has authorized us to say on their behalf that, unless you cease infringement and account for past damages and profits, suit will be brought forthwith.

Yours very truly, Evans & McCoy.

WCM/LR.

* * * * * * *

[fol. 26] IN UNITED STATES DISTRICT COURT

[Case No. 4045]

ANSWER OF DEFENDANT, THE SCHRIBER-SCHROTH COMPANY, TO BILL OF COMPLAINT—Filed February 1, 1932

Now comes defendant, The Schriber-Schroth Company, and for its Answer to the Bill of Complaint says:

1

Answering Paragraph 1 of the Bill, defendant admits the existence, organization and place of business of The Cleveland Trust Company, but denies the status of Chrysler Corporation as alleged.

2

Answering Paragraph 2 of the Bill, defendant admits its incorporation and place of business as alleged, but having no knowledge as to the organization and place of business of Sterling Products Corporation, denies the allegations with respect thereto.

3

Answering Paragraph 3 of the Bill, defendant denies the jurisdiction of this Court as to the subject matter alleged and relief prayed.

4

Answering Paragraph 4 of the Bill, defendant admits that on June 2, 1917 one Louis P. Mooers filed an application, Serial No. 172,380, but denies that said application disclosed the subject matter of patent No. 1,402,309, and further denies that the Statutory prerequisites had been complied with as alleged.

5

Answering Paragraph 5 of the Bill, defendant has no knowledge save said allegations as to the various alleged assignments, and therefore, denies the same, and further denies that The Cleveland Trust Company became vested with and holds the entire right, title and interest in and to said patent No. 1,402,309.

6

Answering Paragraph 6 of the Bill, defendant admits that on July 14, 1917 one Victor E. Schmiedeknecht filed

[fol. 27] an application, Serial No. 180,511, and that on February 12, 1918 patent No. 1,256,265 issued to said Schmiedeknecht, but denies that said application disclosed the subject matter of patent No. 1,256,265, and further denies that the Statutory prerequisites had been complied with as alleged.

7

Answering Paragraph 7 of the Bill, defendant has no knowledge save the allegations as to the assignment and guarantee to Frank Kent as alleged, and therefore, denies the same.

8

Answering Paragraph 8 of the Bill, defendant has no knowledge save the allegations as to the alleged assignment by Frank Kent to Bohn Aluminum & Brass Corporation as alleged, and, therefore, denies the same.

9

Answering Paragraph 9 of the Bill, defendant has no knowledge save the allegations as to the assignment by Bohn Aluminum & Brass Corporation to The Cleveland Trust Company as alleged, and, therefore, denies the same; and defendant denies that The Cleveland Trust Company became vested with and now holds the entire right, title and interest in and to said patent No. 1,256,265.

10

Answering Paragraph 10 of the Bill, defendant admits that on January 3, 1921 one Howard E. Maynard filed an application, Serial No. 434,467, but denies that said application disclosed the subject matter of patent No. 1,655,968; and further denies that the Statutory prerequisites had been complied with as alleged.

11

Answering Paragraph 11 of the Bill, defendant admits the issue of patent No. 1,655,968 on January 10, 1928, jointly to Chrysler Corporation and Aluminum Company of America, but denies proper issuance of said patent to said alleged patentees; and denies that there was thereby secured to said Chrysler Corporation and Aluminum Company of America the sole and exclusive right to make, use and sell

to others to be used throughout the United States and the [fol. 28] territories thereof, any alleged invention or improvement described in said patent.

12

Answering Paragraph 12 of the Bill, defendant has no knowledge save the allegations as to the assignment by Aluminum Company of America to The Cleveland Trust Company as alleged, and, therefore, denies the same; and further denies sufficient title by The Cleveland Trust Company of said patent to warrant institution of suit for infringement thereof by The Clevelard Trust Company.

13

Answering Paragraph 13 of the Bill, defendant has no knowledge save the allegations as to whether Chrysler Corporation is a non-resident, residing withont the jurisdiction of this Court and cannot be made a co-defendant; as to whether The Cleveland Trust Company has advised Chrysler Corporation of the imminent pendency of this case and of the obligation of Chrysler Corporation to join voluntarily in the bringing of this suit; as to whether Chrysler Corporation has refused or declined to voluntarily join as alleged; defendant, therefore, denies such allegations. Defendant further denies that The Cleveland Trust Company is without remedy on the Maynard patent unless Chrysler Corporation is joined as a co-plaintiff in this cause, and further denies that Chrysler Corporation is made a plaintiff in this cause instituted in this District without its consent in order to prevent a failure of justice and to enable The Cleveland Trust Company to protect its interest herein.

14

Answering Paragraph 14 of the Bill, defendant admits that on March 11, 1920 one Frank Jardine filed an application, Serial No. 364,997, but denies that said application disclosed the subject matter of patent No. 1,763,523, and further denies that the Statutory prerequisites had been complied with as alleged. Defendant admits issue of patent No. 1,763,523 on June 10, 1930 to The Cleveland Trust Company as Trustee, but defendant has no knowledge as to the mesne assignments alleged, and therefore, denies the same; defendant further denies that The Cleveland Trust

Company has the sole and exclusive right to make, use and sell to others to be used throughout the United States and [fol. 29] the territories thereof, any alleged invention or improvement disclosed in said patent.

15

Answering Paragraph 15 of the Bill, defendant admits that on November 30, 1917 one Edward J. Gulick filed an application, Serial No. 204,661, but denies that said application disclosed the subject matter of patent No. 1,815,733, and further denies that the Statutory prerequisites had been complied with as alleged. Defendant admits that patent No. 1,815,733 issued on June 21, 1931 to The Cleveland Trust Company, but denies that thereby there was granted to said The Cleveland Trust Company the sole and exclusive right to make, use and sell to others to be used throughout the United States, its territories and dependencies, any alleged invention or improvement disclosed in said patent.

16

Answering Paragraph 16 of the Bill, defendant has no knowledge save the allegations as to any alleged assignment by said Gulick to Packard Motor Car Company, and, therefore, denies the same.

17

Answering Paragraph 17 of the Bill, defendant has no knowledge save the allegations as to any alleged assignments by Packard Motor Car Company to The Cleveland Trust Company, and, therefore, denies the same.

18

Answering Paragraph 18 of the Bill, defendant denies recognition and acquiescence in and by the public of the validity of any or all of the aforesaid patents; denies special recognition and acquiescence in and by parties who have discontinued infringement thereof and who have made amends to plaintiff; denies licenses, payment of material royalties, manufacture and sale of pistons under any or all of said patents by licensees, and extensive and successful use of such pistons. Defendant denies that any licensees under said patents have built plants and established organizations for the manufacture and sale of such pistons on the strength of and by reason of their confidence in the

patents in suit; but on the contrary, defendant states that as [fol. 30] alleged The Cleveland Trust Company is a mere title holder, holding the patents in suit for the benefit of a limited number of piston manufacturers as cestuis qui trustent or beneficiaries under agreements and declarations of trust including Aluminum Company of America, Bohn Aluminum & Brass Corporation, United States Aluminum Company and Aluminum Industries Corporation; that such cestuis qui trustent or beneficiaries are in turn licensees under the patents in suit; and that the entire arrangement is one to restrain competition in trade, to fix prices and to create a monopoly in the manufacture and sale of pistons.

19

Answering Paragraph 19 of the Bill, defendant admits notification by plaintiff, The Cleveland Trust Company, of the patents in suit and of said The Cleveland Trust Company's contention that a certain piston, like Plaintiffs' Exhibit 1 submitted with plaintiffs' Bill of Particulars, infringe said patents in suit, but defendant denies that it has infringed or continued to infringe any or all of said patents.

20

Answering Paragraph 20 of the Bill, defendant admits that since the issue of all of said patents, and prior to the filing of the Bill herein defendant has sold in this District pistons like Plaintiffs' Exhibit 1, submitted with plaintiffs' Bill of Particulars, and further admits that the slot in the skirt of said piston is intended to be completed to the top and bottom of the skirt prior to installation in an engine. Defendant further admits that it has purchased such pistons from Sterling Products Corporation, a Missouri corporation, having its place of business at St. Louis, Missouri, and beyond the jurisdiction of this Court, by orders placed and filled in St. Louis, Missouri, and shipped from St. Louis, Missouri, by said Sterling Products Corporation. Defendant denies that defendant and Sterling Products Corporation have jointly and severally infringed any or all of the patents in suit or contributed to the infringement thereof by making and/or causing to be made, or by using and/or causing to be used, or by selling and/or causing to be sold in this District or elsewhere, Pistons for Internal Combustion Engines embodying jointly and severally any or all of the inventions of the patents in suit.

Defendant further denies that it has realized or received [fol. 31] any gains and profits or has inflicted on plaintiff any damage on account of any sale or marketing of pistons, and defendant further denies that it intends to infringe any of the patents in suit or to induce others to venture to infringe. Defendant states that The Cleveland Trust Company, as alleged, is a mere title holder, does not manufacture or market pistons, and that the sale and marketing of pistons by defendant has not inflicted on The Cleveland Trust Company any loss or damage.

21

Answering Paragraph 21 of the Bill, defendant is not informed, save by the allegations as to the institution of a suit against The Simmons Manufacturing Company and Sterling Products Corporation, as to the entry of a consent decree against The Simmons Manufacturing Company, and as to an injunction against The Simmons Manufacturing Company, and, therefore, denies the same.

22

Answering Paragraph 22 of the Bill, defendant denies that plaintiffs, and particularly The Cleveland Trust Company are without adequate or sufficient remedy at law and that The Cleveland Trust Company was warranted to institute this suit and is entitled to maintain the same in a Court of Equity but alleges that this suit has been instituted in order to harass defendant because defendant is a customer of Sterling Products Corporation, a Missouri corporation, which corporation is a non-resident and beyond the jurisdiction of this Court. That this suit is one of a series of suits which have been instituted in this District against customers of said Sterling Products Corporation, said other suits being respectively, Equity Nos. 4046 and 4047, in each of which suits Sterling Products Corporation has been named as a party defendant with said customer, and in each of which suits the piston relied upon as being an infringement is the same piston as relied upon herein; that defendant is informed, and, therefore, avers that Sterling Products Corporation has invited plaintiff, The Cleveland Trust Company, to institute a suit for infringement of the patents in suit at St. Louis, Missouri, the place of residence of said Sterling Products Corporation, but that plaintiff,

The Cleveland Trust Company, has neglected to do so; and that said Sterling Products Corporation is financially able [fol. 32] to respond in profits and damages in case said patents be sustained and infringement thereof found.

23

Further answering Paragraph 13 of the Bill, defendant alleges that as to the Maynard patent 1,655,968, this suit can not be maintained by The Cleveland Trust Company because Chrysler Corporation is a necessary and even indispensable party because, as alleged, said Chrysler Corporation is a joint owner of an undivided one-half interest in the entire right, title and interest in and to said patent; that said Chrysler Corporation does not appear as a party plaintiff, nor as a party defendant and cannot be made a party plaintiff as alleged because it is beyond the jurisdiction of this Court; and that this suit should, therefore, be dismissed as to the Maynard patent No. 1,655,968.

24

Further answering, defendant alleges that the causes of action joined in the Bill of Complaint as to the several patents are not joint, because as alleged, the titles of the Mooers patent No. 1,402,309, the Schmiedeknecht patent No. 1,256,265, and of the Gulick patent No. 1,815,733 are in The Cleveland Trust Company; the title of the Jardine patent No. 1,763,523 is in The Cleveland Trust Company as Trustee; and the title of the Maynard patent No. 1,655,968 is jointly in Chrysler Corporation and The Cleveland Trust Company; and that the Bill of Complaint should, therefore, be dismissed as to the Jardine and Maynard patents.

25

Further answering, defendant avers that the subject matter of each of the Letters Patent in suit, especially when expanded to include the pistons used and sold by defendant, does not constitute patentable subject matter under the law, and that each of said Letters Patent is void for want of invention.

26

Further answering, defendant avers that the subject matter of each of the Letters Patent in suit, and every sub- [fol. 33] stantial and material part thereof did not ex-

hibit or embody any substantial variation or change from what belonged to the state of the art as it existed at the time of the alleged inventions or discoveries by the respective applicants, and did not involve the exercise of the inventive faculty or constitute the subject matter of invention proper to be secured by the grant of Letters Patent within the meaning and intent of the Statutes of the United States relating to the grant of patents for inventions and that said patents are accordingly void.

27

Further answering, defendant avers that said Mooers, Schmiedeknecht, Maynard, Jardine and Gulick, surreptitiously or unjustly obtained Letters Patent for things which were in fact the inventions of others who were using reasonable diligence in adapting and perfecting the same, and that each of said Letters Patent is accordingly void.

28

Further answering, defendant avers that for the purpose of deceiving the public, the description and specification filed by said Mooers, Schmiedeknecht, Maynard, Jardine and Gulick, were made to contain less than the whole truth relative to their alleged inventions or discoveries, or more than was necessary to produce the desired effect, and that each of said Letters Patent is accordingly void.

29

Further answering, defendant avers that the description of the alleged invention in the specification of each of said Letters Patent in suit is not in such full, clear, concise and exact terms as to enable any person skilled in the art or science to which it appertains or with which it is most closely connected to make, construct, use or employ the same, and that each of said Letters Patent is accordingly void.

30

Further answering, defendant avers that each of said Letters Patent in suit does not comply with Section 4888 of the Revised Statutes of the United States, in that it does not particularly point out and distinctly claim the part, improvement or combination which the patentee claims as

[fol. 34] his invention or discovery, and that each of said Letters Patent is accordingly void.

31

Further answering, defendant avers that the claims in said Letters Patent in suit, and each of them, are directed to functions and results and do not claim subject matter of invention proper to be secured by the grant of Letters Patent within the meaning and intent of the Statutes of the United States relating to the grant of patents, and that each of said Letters Patent is accordingly void.

32

Further answering, defendant avers that the patentees Mooers, Schmiedeknecht, Maynard, Jardine and Gulick, claimed in said Letters Patent in suit to be the original and first inventors or discoverers of material or substantial parts of the things patented, of which they were not the original and first inventors or discoverers; that no disclaimers have been entered to such material or substantial parts, and that plaintiff should, therefore, not be allowed to maintain its suit for infringement of any of said Letters Patent against this defendant.

33

Further answering, defendant avers that during the prosecution of each of the applications of each of the patents in suit, the claims thereof were limited and restricted in the light of the prior art cited by the Examiner and on account of rejections by the Examiner; that the claims must be limited and restricted in the light of the prior art, and that defendant does not infringe any of said Letters Patent or any claims of any said Letters Patent when so limited and restricted.

34

Further answering, defendant avers that the patents in suit, and each of them, were and are wholly invalid and void because the alleged inventions, improvements or discoveries purported to be patented thereby and every substantial and material part of each patent was published, described or patented prior to the alleged invention or discovery thereof, by the respective applicants, or more than

two years prior to their applications for said patent, in and by the following Letters Patent, the applications therefor, and the following publications:

[fol. 35] As to the Mooers Patent 1,402,309

Name	Number	Date
United States		
Spillman & Mooers	1,092,870	April 14, 1914
Riedler	1,259,292	March 12, 1918
Vincent	1,279,184	Sept. 17, 1918
Marmon	1,293,846	Feb. 11, 1919
Franquist	1,153,902	Sept. 21, 1915
Spillman	1,229,540	June 12, 1917
Allyne	1,329,820	Feb. 3, 1920
Church	1,327,147	Jany. 6, 1920
Bamberg	1,329,821	Feb. 3, 1920
French		
Chenard & Walcker	468,595	Apr 28, 1914

As to Schmiedeknecht Patent 1,256,265

Name	Number	Date
United States		
Spillman & Mooers	1,092,870	April 14, 1914
British		
Ferry	12,772	May 25, 1914
Pugh	17,256	July 27, 1907
Ricardo	17,953	Dec. 23, 1915

As to the Maynard Patent 1,655,968

Name	Number	Date
United States		
Spillman & Mooers	1,092,870	April 14, 1914
Long	1,395,441	Nov. 21, 1921
Schmiedeknecht	1,256,265	Feb. 12, 1918
Ebbs	700,309	May 20, 1902
Ricardo	1,294,833	Feb. 18, 1919

Name	Number	Date
French		
Chenard-Walcker	468,595	April 28, 1914
British		
Ricardo	17,953	Dec. 23, 1915

[fol. 36] As to the Jardine Patent 1,763,523

Name	Number	Date
United States		
Ricardo	1,294,833	Feb. 18, 1919
Franquist	1,153,902	Sept. 21, 1915
Ebbs	700,309	May 20, 1902
Long	1,395,441	Nov. 21, 1921
Mooers	1,402,309	Jan. 3, 1922
Anderson	1,283,021	Aug. 29, 1918
Barthel	1,139,396	May 11, 1915
French		
Chenard-Walcker	468,595	April 28, 1914

As to the Gulick Patent 1,815,733

Name	Number	Date
United States		
Spillman & Mooers	1,092,870	April 14, 1914
Ebbs	700,309	May 20, 1902
Franquist	1,153,902	Sept. 21, 1915
Vincent	1,279,184	Sept. 17, 1917
Van Bever	1,031,212	July 2, 1912
Knight	1,061,756	May 13, 1913
Allyne	1,329,820	Feb. 3, 1920
Bamberg	1,329,821	Feb. 3, 1920
British		
Rainforth	6,826	Mar. 19, 1912
Pugh	17,256	July 27, 1907
Ferry	12,772	May 25, 1914
French		
Chenard-Walcker	468,595	April 28, 1914

and in and by certain other Letters Patent, not now known to defendant, but which when ascertained, defendant prays may be made part of this Answer by amendment thereto.

35

Answering further, defendant avers that said Mooers, Schmiedeknecht, Maynard, Jardine and Gulick patents, and [fol. 37] each of them, were and are wholly invalid and void, because more than two years prior to the effective filing dates of the applications for the respective patents, the alleged inventions, improvements and discoveries purported to be patented in each of them, or any substantial or material part thereof, were publicly used or on sale in this country by the following persons and corporations at and residing at the following places:

George Dorris	St. Louis, Missouri
Dorris Motor Car Co.	St. Louis, Missouri
Elmer Long	Detroit, Michigan and Quincy, Illinois and Hannibal, Missouri
Packard Motor Car Company	Detroit, Michigan
Edward J. Gulick	Elkhart, Indiana and Detroit, Michigan
H. H. Franklin Mfg. Company	Syracuse, N. Y.
Aluminum Castings Company	Cleveland, Ohio

and by certain other parties not now known to the defendant, but whose names when ascertained, defendant prays may be made part of this Answer by amendment thereto.

36

Further answering, defendant avers that said Mooers, Schmiedeknecht, Maynard, Jardine and Gulick patents and each of them, were and are wholly invalid and void, because said Mooers, Schmiedeknecht, Maynard, Jardine and Gulick were not the original and first inventors or discoverers of the alleged inventions, improvements or discoveries purported to be patented therein, or any substantial or material part thereof, but that the same, and every substantial and material part thereof were, prior to the alleged inventions thereof by said Mooers, Schmiedeknecht, Maynard, Jardine and Gulick developed or known and used by others in this country at and residing at the following places:

[fol. 38]

George Dorris	St. Louis, Missouri
Elmer Long	Detroit, Michigan and Quincy, Illinois and Hannibal, Missouri
E. O. Spillman	No. Tonawanda, N. Y.
Carl R. Green	Dayton, Ohio
Jesse G. Vincent	Detroit, Michigan
Howard G. Marmon	Indianapolis, Indiana
Charles Y. Knight	Chicago, Illinois
Charles C. Anderson	Cedar Rapids, Iowa
Gustave E. Franquist	New Brunswick, N. J.
Edmund E. Allyne	Cleveland, Ohio
Joseph F. Bamberg	Tonawanda, N. Y.

and by certain other persons and corporations not now known to defendant, but whose names, when ascertained, defendant prays may be made part of this Answer by amendment thereto.

37

Further answering, defendant avers that said Mooers, Schmiedeknecht, Maynard, Jardine and Gulick patents, and each of them were and are wholly invalid and void, because said Mooers, Schmiedeknecht, Maynard, Jardine and Gulick, were not the original and first inventors or discoverers of the alleged inventions, improvements, or discoveries purported to be patented therein, or any substantial or material part thereof, but that the same and every substantial and material part of each patent, was prior to said alleged invention thereof by said Mooers, Schmiedeknecht, Maynard, Jardine and Gulick conceived by others in this country, who were using reasonable diligence in adapting and perfecting the same, to-wit, by the following persons residing at the following places:

George Dorris	St. Louis, Missouri
Elmer Long	Detroit, Michigan and Quincy, Illinois and Hannibal, Missouri
E. O. Spillman	North Tonawanda, N. Y.
Carl R. Green	Dayton, Ohio
Jesse G. Vincent	Detroit, Michigan

[fol. 39]

Howard G. Marmon	Indianapolis, Indiana
Charles Y. Knight	Chicago, Illinois
Charles C. Anderson	Cedar Rapids, Iowa
Gustave E. Franquist	New Brunswick, N. J.
Harold D. Church	Detroit, Michigan

and by certain other persons and corporations not now known to defendant, but whose names, when ascertained, defendant prays may be made part of this Answer by amendment thereto.

38

Further answering, defendant avers that patents Nos. 1,402,309, 1,655,968, 1,763,523 and 1,815,733, and each of them were and are wholly invalid and void, because:

(a) The alleged improvements purported to be claimed in patents Nos. 1,655,968, 1,763,523, and 1,402,309 are so inter-related and so described and claimed in the respective patents that the subject matter thereof is doubly patented.

(b) The alleged improvements purported to be described and claimed in patents Nos. 1,655,968 and 1,815,733 are so inter-related and so described and claimed in the respective patents that the subject matter thereof is doubly patented.

39

Further answering, defendant avers that said Mooers, Schmiedeknecht, Maynard, Jardine and Gulick patents in suit are wholly invalid and void because the alleged inventions, improvements, or discoveries purported to be claimed therein are substantially different from any indicated, suggested or described in the original applications therefor; that subsequent to the filing of the applications for said Letters Patent, plaintiff and its predecessors in title became aware of the rights of others in and to the manufacture, use or sale of pistons not within the scope of said original applications; and that thereafter said applications were enlarged and expanded for the purpose of dominating the intervening rights of others.

40

Further answering, defendant avers that said Mooers Schmiedeknecht, Maynard, Jardine and Gulick patents in

[fol. 40] suit were and are wholly invalid and void because the alleged inventions, improvements, or discoveries purported to be claimed therein are substantially different from any indicated, suggested or described in the original applications therefor; that subsequent to the filing of the applications of said Letters Patent, and after pistons were in public use or on sale in this country or available to the public in this country, plaintiff and its predecessors in title enlarged and expanded said applications with a view of dominating the intervening rights of others.

41

Further answering, defendant avers that said Gulick patent in suit is wholly invalid and void, because said Edward J. Gulick did, after his alleged invention or discovery of the thing purported to be patented thereby, so unreasonably delay to make application for Letters Patent that the alleged invention, improvement or discovery, and every substantial or material part thereof was constructively abandoned to the public.

42

Further answering, defendant avers that plaintiff, The Cleveland Trust Company, has from time to time acquired and accumulated Letters Patent, and applications therefor, purporting to claim certain alleged inventions, improvements or discoveries, which within the knowledge of plaintiff, The Cleveland Trust Company, had been invented or known or used by others prior to the alleged inventions or discoveries thereof by the patentees or applicants; that plaintiff, The Cleveland Trust Company, has unjustly intimidated the public with such Letters Patent, known by it to be wholly invalid and void, and that plaintiff, The Cleveland Trust Company, should, therefore, be denied the equitable relief prayed for in the Bill.

Wherefore, Defendant prays to be hence dismissed, and for its costs in this behalf most wrongfully sustained.

The Schriber-Schroth Company, by Kwis, Hudson & Kent, Solicitors for Defendant.

[fol. 41] Service of a copy of the foregoing answer acknowledged this 1st day of February, 1932.

Evans & McCoy, Solicitors for Plaintiffs.

IN UNITED STATES DISTRICT COURT

[Case No. 4045]

NOTICE BY DEFENDANT, THE SCHRIBER-SCHROTH COMPANY OF INTENTION TO TAKE DEPOSITIONS—Filed February 15, 1932

The Defendant hereby gives notice of its intention to take depositions in the above entitled cause, pursuant to the provisions of Equity Rule 47 and Sections 863, 865, 866 and 867 of the Revised Statutes of the United States.

The Schriber-Schroth Company, by Kwis, Hudson & Kent, Solicitors.

Cleveland, Ohio, February 15, 1932.

Service of a copy of the foregoing notice is acknowledged this 15th day of February, 1932.

Evans & McCoy, Solicitors for Plaintiffs.

[fol. 42] IN UNITED STATES DISTRICT COURT

[Case No. 4045]

SUPPLEMENTAL NOTICE BY DEFENDANT, THE SCHRIBER-SCHROTH COMPANY, OF INTENTION TO TAKE DEPOSITIONS, ATTACHED TO VENNER ET AL. DEPOSITIONS—Filed January 9, 1933

To Messrs. Evans & McCoy, Bulkley Building, Cleveland, Ohio, Attorneys for Plaintiffs:

Please take notice that on Wednesday, April 27, 1932, at 10:00 A. M., Central Standard Time, the depositions of Charles Chadwick, a resident of Quincy, Illinois, William M. Venner and George Dorris, residents of St. Louis, Missouri, will be taken on behalf of the defendant herein, before Mildred Cook, a Notary Public, who is not of counsel for either of the parties to nor interested in this cause, at 2119 Railway Exchange Building, St. Louis, Missouri.

Upon the completion of the depositions of said witnesses, the deposition of Sidney D. Royalty, a resident of Jacksonville, Illinois, will be taken in Room No. 1, Morrison Block, Jacksonville, Illinois, before Lina Epperson, a Notary Public, who is not of counsel for either of the parties to nor interested in this cause. The exact time for taking the deposition of said Sidney D. Royalty will be fixed upon the

completion of the depositions of the three first named witnesses.

The examination of said witnesses will be taken under Sections 639, 640 and 641 of Title 28 of the United States Code.

Kwis, Hudson & Kent, Attorneys for Defendant.

Cleveland, Ohio, April 22, 1932.

Service of a copy of the foregoing Notice of Taking Depositions is hereby acknowledged this 22nd day of April, 1932.

Evans & McCoy, Attorneys for Plaintiffs.

[fol. 43] NOTICE

To Messrs. Evans & McCoy, Bulkley Building, Cleveland, Ohio, Attorneys for Plaintiffs:

Supplementing the notice, dated April 22d, 1932, of taking depositions in St. Louis, Missouri and Jacksonville, Illinois, please take notice that, in addition to the witnesses whose depositions will be taken, at 2119 Railway Exchange Building, St. Louis, Missouri, pursuant to said notice, the deposition of Louis M. Stellman of Syracuse, New York, will be taken at said address following the depositions of the witnesses Chadwick, Venner and Dorris and before proceeding to Jacksonville, Illinois, for the purpose of taking the deposition of the witness Royalty.

Kwis, Hudson & Kent, Attorneys for Defendant.

Cleveland, Ohio, April 26, 1932.

Service of a copy of the foregoing Notice is hereby acknowledged this 26th day of April, 1932.

Evans & McCoy, Attorneys for Plaintiffs.

IN UNITED STATES DISTRICT COURT

[Case No. 4045]

ORDER FOR REFERENCE TO AND APPOINTMENT OF SPECIAL MASTER—Entered November 7, 1932

This cause coming on to be heard upon motion and application of Plaintiffs to refer the issues, both of law and fact, to a Special Master for his investigation, consideration, findings, conclusions and report, and it appearing that exceptional conditions exist in this cause and in the business

[fols. 44-49] of the Court, and it appearing that this cause is at issue, and that counsel for both parties have heretofore stipulated that the cause may be tried at any time after June 20th, 1932, at the convenience of the Court, and it appearing that the cause will take considerable time for the trial thereof, therefore:

It is ordered that this cause, with its pleadings, evidence, proofs and exhibits, including the testimony, exhibits and all other matter heretofore filed, taken, submitted, offered or adduced, be, and the same is hereby referred to Wm. B. Woods, Esq., Special Master, to hear witnesses and counsel, to receive and consider testimony, affidavits, exhibits and other proofs including that heretofore filed, to examine and consider pleadings, proofs, briefs, arguments and any and all other matters relating to the questions involved or the issues raised in this cause, and rule on the admissibility of evidence, but to preserve such evidence as counsel may demand which the Special Master deems inadmissible, together with his ruling thereon for ultimate and final ruling by this Court, to observe such tests and experiments as the parties may perform or cause to be performed, and as he, with reasonable convenience, is able to and considers proper, and to hold his sessions within the District and Division of this Court at such times as he shall direct and thus to hear and consider all of the proofs and arguments pertinent to the issues of law and fact arising in this cause; and

It is further ordered that the said Special Master herein shall file and report to the Court his conclusions of law and findings of fact, together with all the evidence and exhibits presented, offered and/or considered by him and to file with this Court his report and opinion, giving his reasons and authority for his findings and conclusions, along with his recommendations concerning the relief demanded and/or concerning the final disposition of this cause, all subject to the final, ultimate and full review and determination by this Court. Exceptions to defendant.

Jones, United States District Judge.

Service of a copy of the foregoing Motion and proposed Order and the Memorandum attached thereto acknowledged this 14th day of September, 1932.

Kwis, Hudson & Kent, Solicitors for Defendant.

* * * * * * *

[fol. 50] IN UNITED STATES DISTRICT COURT

[Case No. 4045]

ORDER APPROVING NARRATIVE FORM OF TESTIMONY

(Entered February 26, 1935 by Paul Jones, Judge)

Now comes the plaintiffs and present to the Court their certain narrative form of testimony taken at the trial of this cause which being found by the Court to be true, is allowed, signed and sealed, and is hereby ordered to be filed in this cause.

[fol. 51] IN UNITED STATES DISTRICT COURT

ACKNOWLEDGMENT OF SERVICE OF NARRATIVE FORM OF TESTIMONY—Filed February 26, 1935

[Case No. 4045]

Service of a copy of the within Narrative Form of Testimony in the above entitled suits, on appeal, acknowledged this 21st day of February, 1935, and the Narrative is hereby approved by Defendants.

John H. Bruninga, Attorney for Defendants.

IN UNITED STATES DISTRICT COURT

Narrative Form of Testimony—Filed February 26, 1935

It was agreed between counsel that the exhibits would be marked as offered in Cleveland Trust Co. and Chrysler Corporation vs. Aberdeen, in Equity 4046.

By Mr. Richey: I offer the patents in suit as Plaintiffs' Exhibits 2 to 6, inclusive.

I will offer in evidence as Plaintiffs' Exhibit 1, the piston referred to in the Answer.

A very large number of claims have been infringed, and we have picked out certain claims upon which we rely. In the Gulick patent we charge infringement by the piston which we have called the Sterling piston, and an example of which is in Exhibit 1, claims 1, 11, 12, 13, 15, 18, 30, 33, 35, 38, 41, 42, and 43.

Now, we charge infringement by the Ray Day piston of claims 1, 15, 22, 27, 28, 29, 30, 33, 36, 37, 38, 42, and 43.

On the Jardine patent, we charge infringement by the Sterling piston, exemplified by Exhibit 1, when the slit is completed of claims 1, 2, 4, 5, 6, 7, 8, 9, 10, and 11. We [fols. 52-57] charge infringement by the Ray Day piston of claim 1.

In the Maynard patent, we charge infringement by the Sterling piston of claims 1 to 11, inclusive, that is, all of the claims of that patent.

Of the Mooers patent, we charge infringement by the Sterling of claims 1, 2, 6, and 10. We had notified you of claim 9, but we are dropping that out.

By the Ray Day piston we charge infringement of claims 3, 4, 8, and 11 of the Mooers patent.

Of the Schmiedeknecht patent, we charge infringement by the Sterling of claims 1 and 3.

PLAINTIFF'S TESTIMONY

* * * * * * *

[fol. 58] Thereupon, the plaintiffs called as a witness, ZAY JEFFRIES, who, being first duly sworn, testified as follows:

Direct examination.

By Mr. Richey.

Q. Will you state your name, Doctor?

A. Zay Jeffries.

Q. Do you live in Cleveland?

A. Yes, in Shaker Heights.

[fol. 59] Q. And you are of mature age?

A. Yes.

Q. Will you state how you are employed at the present time?

A. I am consulting metallurgist for the Aluminum Company of America, with offices at the Harvard Avenue plant in Cleveland; chairman of the Technical Committee of the Incandescent Lamp Department of the General Electric Company, with an office at Nela Park, in Cleveland; and president of the Carboloy Company, a subsidiary company of General Electric Company.

Q. How do you divide your time among those companies?

A. Well, I give approximately half my time to the Aluminum Company and half to the General Electric Company.

Q. Now, will you state your experience and your education and other qualifications in connection, particularly in connection with the subject matter to which this suit relates, naming any awards you have had in connection with societies related to the subject matter?

A. I received the degree of Bachelor of Science in mining engineering, and later the degree of metallurgical engineer, and still later the honorary degree of Doctor of Engineering from the South Dakota School of Mines. I have also received the Degree of Doctor of Science, majoring in metallurgy from Harvard University. I taught metallurgy at Case School of Applied Science in Cleveland from 1911 to 1917. During that time I did considerable consulting work on various metallurgical and engineering problems for the National Electric Lamp Association, which is part of the General Electric Company, for the Lincoln Electric Company, and Aluminum Castings Company. My work with the Aluminum Castings Company began in 1915, and that connection has continued ever since, in one form or another. The Aluminum Castings Company was reorganized after 1915 and became Aluminum Manufactures, Incorporated, and then Aluminum Manufactures, Incorporated, became part of the United States Aluminum Company, at a still later date. I left the teaching work entirely in 1917 to give all of my time to the consulting and engineering work with the two companies, the Aluminum Castings Company and General Electric Company. At that time I assumed the directorship of research for Aluminum Castings Company. I was also director of research for Aluminum Manufactures, Incorporated. The research laboratories of Aluminum Manufactures, Incorporated, were con- [fols. 60-67] solidated with the research laboratories of Aluminum Company of America, so at that time I joined the Aluminum Company of America staff. That was, as I recall it, in 1920.

In connection with my work with the Aluminum Castings Company and its successor company, and Aluminum Company of America, I have had considerable to do with the aluminum piston art, not only from the standpoint of manufacture but also from the standpoint of the testing of such pistons. The so-called dynamics laboratory at Harvard

Avenue was for a time under my direction, and for years I have been in fairly close touch with the piston tests in that laboratory.

With reference to professional societies, I am a member of ten or more of the national engineering and scientific societies, having been president of the American Society for Steel Treating, and chairman of the Institute of Metals, Division of the American Institute of Mining and Metallurgical Engineers. I am a member of the Society of Automotive Engineers, and have been a member of the Non-Ferrous Metals Division of that society for perhaps 12 or 14 years. I have been chairman of the division for about five years during that period. I have also been on the executive committee of the American Society for Testing Materials. I am also a member of the Materials Committee for Aircraft of the National Advisory Committee of Aeronautics, and a member of the sub-committee on metals of that committee. Insofar as honors are concerned, I delivered a number of invitational lectures, such as the Robert Henry Thurston Lecture of the American Society of Mechanical Engineers; the Henry Marion Howe Lecture of the American Institute of Mining and Metallurgical Engineers; and the Campbell Lecture of the American Society for Steel Treating. I was also awarded the James Douglass gold metal by the American Institute of Mining and Metallurgical Engineers for distinguished service in non-ferrous metallurgy.

I have previously testified in a number of patent suits, including the ductile tungsten suit, the suits on the Langmuir gas filled lamp, the Just & Hanaman patent on tungsten as a filamentary body. I have testified for the Fulton Company on sylphon cases, and for the Aluminum Company of America in patent suits relating to the manufacture of aluminum alloy pistons.

* * * * * * *

[fol. 68] Q. I show you two pistons, one marked for identification Plaintiffs' Exhibit 17, and the other Defendants' Exhibit AAA, and ask you to state whether or not those are made commercially?

A. Yes, they are.

[fols. 69-71] Q. Who makes them commercially?

A. United States Aluminum Company, Bohn Aluminum & Brass Corporation, Aluminum Industries, Incorporated,

and insofar as Exhibit 17 is concerned, I think the Sterling Products Corporation.

* * * * * * *

Q. Take this Exhibit 17, how long has that been manufactured by the United States Aluminum Company or its predecessors in business?

A. I think about 11 or 12 years.

Q. And how long has it been manufactured by Aluminum Industries, Inc., or its predecessors?

A. This particular type of piston I can't say. To the best of my knowledge, however, it is since 1923 or '24, at any rate.

Q. And how long have pistons like Exhibit 17 been manufactured by the Bohn Aluminum & Brass Corporation?

A. To the best of my knowledge about the same period as the Aluminum Industries, Incorporated.

* * * * * * *

[fols. 72-73] Q. Doctor, have you studied the patents in suit so that you understand the devices illustrated and described therein, their operation, functions and uses?

A. Yes.

* * * * * * *

[fol. 74] In the Jardine patent 1,763,523, there is gained in a large measure the flexing result of Gulick but a piston is provided having but a single wall, light in construction and economical in manufacture. In the Jardine piston the webs holding the bosses may do double duty as compared with the webs shown in the Gulick construction. This is particularly shown in Figs. 6 and 7 of the Jardine patent. Here the webs holding the bosses attach to the head flange at the bottom of the ring groove portion rather than to the head direct. This permits of a single wall construction. The skirt portion around the bosses is entirely removed in the construction shown in Figs. 6 and 7. Most of the bearing of the skirt is taken on what is known as thrust faces, which are the two faces 90 degrees from the wrist pin boss axis. The Jardine [fol. 75] construction is therefore simpler than the Gulick construction and provides a piston of lighter weight and one which is cheaper to manufacture. The skirt segments in Figs. 6 and 7 are separated from the head by horizontal

slots. There is in effect a horizontal slot completely around the piston at the bottom of the ring flange. That is true in so far as contact with the cylinder is concerned. It is not true in so far as continuity of metal is concerned in the piston construction. The skirt is attached to the head by means of webs, which webs also carry the bosses. The thrust faces of the skirt may also be slotted vertically, or one of the faces may be slotted vertically to produce flexibility and yielding in response to cylinder wall pressure.

There are several ways of combating the clearance problem in the use of aluminum alloy pistons in cast iron cylinder barrels. One is the reduction of temperature of the skirt. This is present in Gulick to an extent by virtue of the horizontal slot at the bottom of the ring flange. It is also present to an extent in the Jardine piston inasmuch as the air gap at the horizontal slots, disconnecting the bearing faces from the head portion, is a heat insulator. This air gap does not permit the heat from the head to flow directly to the skirt at the bearing faces. The skirt is therefore maintained at a somewhat lower temperature than would obtain if the head and skirt were integrally connected horizontally. There is another way to help compensate for the excess expansion of the aluminum and that is by taking advantage of such distortion of the piston as may be produced by the differences in temperature of the different parts of the piston. The Jardine construction represents an example of this. When the piston head portion is heated to a high temperature, it expands more than the cooler skirt portion. Inasmuch as it is integrally connected to the skirt portion only in the region above the bosses, this entire head expansion tends to spread or increase the diameter of the piston in a direction parallel with the wrist pin boss.

We may refer to two varieties of expansion: one as thermal expansion. This is the normal expansion of the metal as the result of being heated to a certain temperature. The other is mechanical expansion. That is the expansion due to mechanical forces, no matter what the origin.

In this particular construction, as for example shown in Figs. 6 and 7 it will be found that the expansion of a certain [fols. 76-80] portion in a direction parallel with the wrist pin, at the top of the skirt portion, is greater than that which can be accounted for by temperature alone. This excess expansion may be called mechanical expansion and is clearly understood as being the result of the excess thermal ex-

pansion of the head portion. In a trunk type piston this mechanical expansion is imparted fairly uniformly to the top of the skirt. When the top of the skirt is slotted, as shown in Figs. 6 and 7 of the Jardine patent, this excess expansion occurs in a direction parallel with the wrist pin, and there is a contraction, there is a compensating contraction in a direction perpendicular to that of the wrist pin axis. This mechanical expansion can only be taken advantage of when the skirt around the bosses is relieved, allowing space for such metal to move freely. It may be noted that there is no such relief around the bosses in the Gulick patent. So the Jardine construction differs from Gulick in that respect, and the mode of operation differs also as described. The final result is, however, pretty much the same as Gulick in operation, with the exception of the lightness and cheapness of manufacture mentioned earlier.

Q. Will you explain why it is cheaper to manufacture?

A. The Jardine piston, especially the one shown in Fig. 7, is cheaper to manufacture, in the first place because it contains less metal, and it is cheaper to manufacture, in the second place, because it is a much simpler construction. A single wall is always cheaper to manufacture than the double wall; and in this particular case there is another advantage that the Jardine piston can be cast in a permanent mold, and thus a better grade of metal can be gotten into the Jardine piston than into the Gulick piston.

* * * * * * *

[fol. 81] Q. All right, now will you proceed with the comparison of Exhibit 17 with the other patents in suit?

A. In so far as the Jardine patent is concerned, this piston corresponds quite closely with the construction shown in Figs. 6 and 7 down to a point about opposite the lower portion of the bosses. It has the same head construction and the same web construction at the upper portion and the same general type of boss relief at the top of the skirt. It differs from the Jardine construction essentially in the completion of the bearing surface at the bottom of the skirt and the abbreviation of the web. The webs of the Maynard patent are made shorter, especially below the bosses. In so far as operation is concerned this piston will operate substantially the same as Jardine from the bosses upward, but it will provide a better bearing and better elimination of oil-pumping by virtue of the full bearing below the boss section.

[fol. 82] So the result of the piston Exhibit 17 should on the whole be somewhat better than the result of the Jardine, specific Jardine construction shown in Figs. 6 and 7, although embodying the results of such Jardine piston about from the boss portion upwards. In so far as Gulick is concerned, the piston, Exhibit 17, differs in construction by being a single walled, lighter construction—a single walled construction thus producing a lighter piston than Gulick. It operates at the bottom of the skirt very much the same as Gulick. It operates at the top of the skirt differently from Gulick by virtue of the difference in construction. The top of the skirt in Gulick is quite flexible. It is sufficiently flexible to compensate for all of the extra clearance. The top of the skirt of the Maynard is not sufficiently flexible to compensate for all the difference in clearance. The other factors in Maynard are taken advantage of, such as the relief around the bosses and the mechanical distortion, enlarging the diameter across the bosses and pulling in the diameter at 90 degrees from the bosses. The compensation for the extra expansion is also partly provided for by reducing the bearing area at the top of the skirt on the thrust faces, which is not done in Gulick.

Q. Now, you have said that the Jardine piston operated differently from Gulick and the top of the skirt in Exhibit 17 operated differently from Gulick. Just what do you mean by saying they operate differently?

A. I mean that the Jardine adds to Gulick the mechanical distortion and the boss relief and the reduction of bearing area at the top of the skirt in the cylinder. That portion is a different one from the operation of the Gulick construction as shown in the diagram. It adds in fact to the flexibility of Gulick the boss relief and mechanical distortion and reduction of area of the bearing contact.

Q. That is, it employs the Gulick operation but adds to it?

A. That is true.

Q. And that same thing is true of the upper part of this Exhibit 17?

A. Yes, exactly.

Q. But what is meant by the difference in operation was that they all employ the same operation, but the Jardine and the Exhibit 17 add something to it?

A. Yes.

• • • • • • •

[fol. 83] Q. I now call your attention to Plaintiffs' Exhibit 1, the Sterling piston, and ask you to assume, first, that this vertical slot is cut through at the bottom and top so as to make it continuous from the bottom of the skirt to the top, that is, from the bottom to the horizontal slot, and compare such a piston with the piston Plaintiffs' Exhibit 17, and the [fols. 84-89] patents in suit, in structure, mode of operation, and results.

A. Plaintiffs' Exhibit 1 appears to be a duplicate of Exhibit 17, although made in different mold, as can be seen by the shape of the core sections.

Q. That is, Plaintiffs' Exhibit 1, assuming the slot cut through?

A. Yes. They both appear to be Ford pistons for the Model A four-cylinder car, and hence what I have said with reference to Exhibit 17 may be said with the same force with respect to Plaintiffs' Exhibit 1.

Q. That is, with respect to the comparison of the two in construction, mode of operation and results, with the patents in suit?

A. Yes.

Q. Which ones of these pistons, Exhibit 17 or Exhibit 1, were on the market first in order of time, I mean? I don't mean those particular pistons; I mean pistons of that type made by the plaintiffs' licensees.

A. I think Exhibit 17, so far as my knowledge goes.

* * * * * * *

[fol. 90] Cross-examination of Mr. Jeffries.

By Mr. Bruninga:

Q. Dr. Jeffries, how much practical experience have you had in the actual manufacture of pistons, particularly aluminum pistons?

A. Well, I have spent most of the summer of 1916 in the actual manufacturing operations of aluminum alloy pistons, even going so far as to operate molds. And then I have spent a considerable amount of time in the piston plant, working on piston problems of one kind or another, mostly when troubles came up.

Q. Your experience in the summer of 1916 was with the regular trunk piston, unslotted and unrelieved, and so forth?

A. Yes.

Q. You never had any experience in the actual fitting of pistons to a cylinder?

A. No, not to do it with my own hands.

Q. So far as the split pistons are concerned, your experience has been a matter of observation and watching what others do and drawing your own conclusions; is that right?

A. Well, yes, and also getting the conclusions of others and examining pistons after they have come out of motors to see what the results of tests were and things of that sort.

Q. You have never been an engineer in an automobile manufacturing plant?

A. No.

Q. You never have had the job of designing any pistons for actual use in automobile engines?

A. No.

Q. Never had any experience in actually making them?

A. You mean machining them?

Q. Machining them?

A. No.

Q. And you have never had any experience in actually fitting them?

A. No, not with my own hands.

Q. Now, you referred to the Langmuir patent case in which you were an expert. That was a suit between DeForest Company and General Electric, was it?

A. Well, no, I had in mind the one between General Electric and P. R. Mallory Company on gas filled lamps. The one with DeForest was on radio tubes, it wasn't a gas filled lamp patent. However I did give testimony in one of the other suits. No, it wasn't the Langmuir suit with the Radio Corporation.

Q. Now, the Aluminum Company of America suit that you say you have testified in, included the Kant-Skore case in Cincinnati in 1923; is that right?

A. Yes.

Q. And the Sterling case in St. Louis, tried in March, 1931?

A. Was it '31 or was it earlier? It was the Sterling case in St. Louis, at any rate.

[fol. 91] Q. And that included the suit against United Engine & Machine Company in San Francisco last October, just a few months ago?

A. Yes.

Q. And all those suits were on the so-called molding patents of Aluminum Company of America?

A. Yes, molds, processes and articles.

Q. And I represented the United Engine & Machine Company in that suit in San Francisco, didn't I?

A. Yes, as far as I know; you were there and tried the case.

Mr. Richey: We agree that you represented them. One of the lawyers.

Q. You used Exhibit 14 or one substantially identical with it in both the Sterling and United cases, didn't you?

A. Yes, one showing the same type of section, at any rate.

Q. In the Sterling case Judge Faris held the process and product patents invalid and the other mold patents not infringed? Held the process and product patents invalid and the mold patent not infringed; isn't that it?

A. Yes.

Q. That was about a year ago last September?

A. I don't remember; about that time, yes.

Q. Now, in the Kant-Skore, Sterling and United cases you took the position that the things that made the aluminum piston a success were the process, product and molding patents involved in those suits; isn't that right?

A. That is correct.

Q. And that the success of the aluminum piston really dated from the time that those so-called inventions appeared?

A. That is correct.

Q. You did not stress the importance of these patents in suit, did you, in any of these cases?

A. Yes.

Q. You did stress the importance of them?

A. Yes. It was particularly brought out that the slotting of the skirt was current practice, both by yourself, Mr. Richey, and myself; and the importance of the great resiliency and hardness and strength of the metal in the permanent mold castings was stressed as having a very important bearing on the success of the slotted skirt piston.

Q. But you emphasized the fact that the production of those pistons under chilling conditions enabled the slotted structure to be used; isn't that right?

A. Yes, practically.

Q. That was just about your position?

A. That is practically the case. That is the history of it, too.

[fols. 92-94] Q. And you emphasized the fact that before the advent of the slotted skirt from seven million to ten million pistons had been produced that were never slotted?

A. That is correct.

Q. You also emphasized the fact that even at that time, that is, last October, the Reo Company still used non-slotted pistons?

A. That is correct.

* * * * * * *

[fols. 95-99] Q. In the piston such as Exhibit 17 or Exhibit 1, that skirt does not perform any sealing function whatsoever, does it?

A. Not against gases. It gives a better bearing, of course the skirt is a better bearing at the bottom than it would be if the skirt weren't there.

Q. It simply performs a better oil distributing function, isn't that right?

A. Yes, it does that. It also helps with the guiding of the piston in the cylinder barrel.

Q. And you immediately lose that in the Jardine patent piston when you take off the circumferential part just below the wrist pin bosses?

A. Yes, that function is lost.

Q. That function is lost in every slipper type piston, isn't that right?

A. Yes, I think so.

Q. The Jardine patent is a distinct slipper type piston, isn't it?

A. The drawing shows slipper type, yes.

Q. Well, is there any statement in the specification distinctly saying that the parts can be extended around below the wrist pin bosses?

A. No, I think not.

* * * * * * *

Q. And the aluminum piston did not come into use until about 1915, according to your views?

A. Yes.

Q. At least their use was so small it could hardly be counted?

A. Yes, I know of no use prior to 1915.

• • • • • • •

[fol. 100] Q. It wasn't until this molding process was perfected that aluminum pistons were capable of being used commercially?

A. That is correct. Or, at least, they weren't used commercially. If they were capable of it or not, I couldn't say.

• • • • • • •

[fol. 101] Q. Well, your knowledge and information on the ownership of the patents in suit by Cleveland Trust Company is no better than your knowledge or information as to the ownership by the Cleveland Trust Company of the Spillman & Mooers patent?

A. No better, no.

Q. You were consulted with reference to the Simmons case in this circuit, weren't you?

A. Well, I conferred with the attorneys prior to the date of the trial of the Simmons case, yes.

Q. And you know that that particular patent was one of the patents in suit in that Simmons case?

A. I believe it was.

Q. The Spillman & Mooers patent.

A. I believe it was, at least at an earlier stage of the case.

Q. You also know that the accused device in that Simmons case was the same as Exhibit 1?

A. I don't know.

Mr. Bruninga: Will counsel agree to that or will I have to produce the record?

Mr. Richey: I think that is right, certainly I don't believe there are any differences of any material importance between the two.

[fols. 102-103] Q. You know, don't you, that the Cleveland Trust Company prior to the date of the expiration of the Spillman & Mooers patent on April 14, 1931, collected royalties under that patent, as well as some of the other patents?

A. I think they included that in the group of patents under which royalties were collected.

Q. And those royalties were collected on all the pistons that you have testified about as being licensed?

A. Yes.

* * * * * * *

[fol. 104] Further Cross-examination of Mr. Jeffries.

By Mr. Bruninga:

Q. * * * In the permanent molding of the pistons, of such pistons as Exhibit 1 a pair of outside mold parts, [fols. 105-123] shaped to correspond to the outside of the piston, are used, and then for the inside there is a core made up of parts, in this particular case a center core piece which can be seen by the markings on the inside, and a couple of side core pieces, the three core pieces being shaped to the interior of the piston. And then a suitable gate is provided so that the metal can be poured into the mold, and the center core part is withdrawn, then the two side core parts are moved in to disengage them from the interior of the piston. That is generally the procedure, isn't it?

A. Yes.

The Master: As I understand, the permanent mold is something that can be withdrawn and leave the form of the thing that is being molded without disturbing it, isn't it?

Mr. Bruninga: Well, I want to ask this witness what is meant by permanent molding. Permanent molding as applied to molding with metal as distinguished from molding with sand.

The Witness: Generally speaking, I think there are other types of material used in permanent molds, but a permanent mold, as his Honor said, is one that can be used over and over again to make the same type of casting.

* * * * * * *

[fol. 124] Q. Let's leave out the question of the great commercial utility of this piston and let's get down to facts. The so-called webs in this piston in Exhibit 17 do not flex like contemplated in the Jardine patent, do they, at the top?

A. Not as much as with the webs at the top of the construction shown in Jardine Figs. 6 and 7.

Q. Would you say even 1% as much?

A. Oh, yes. I told you a while ago I cannot say what percentage is contributed by each one of these elements, I don't believe you can, either.

Q. I don't claim to be an expert, Doctor. The flexure at the bottom is due to the twisting of the whole structure, isn't that right, from the top to the bottom? The flexing of the bottom, that can be accomplished by simply pressing the skirt together with your thumb?

A. Yes, that is true generally. The whole skirt contributes to that flexibility.

* * * * * * *

Q. Now, Doctor, I wish you would take a clamping device that I hand you and which I will mark for identification as Defendants' Exhibit 3-I. Will you demonstrate to the Court just how you flex those webs on Exhibit 17, particularly at the top, to close the slot at the top?

A. I don't anticipate I can close the slot at the top with this device.

[fol. 125] Q. Well, you can get a terrible leverage with that device, can't you?

A. Considerable, yes.

Q. And you can get about as much pressure with that device as you ordinarily want to have in an automobile cylinder in which that piston operates?

A. Possibly. This piston is cold, it is not in operating condition, no need for any flexing when the piston is at this temperature, no possibility of any distortion effect when a piston is all at the same temperature.

Q. But you don't think even with that device you can even appreciably close the slot at the top of Exhibit 17?

A. Appreciably, well, I don't know, but I will say the difference of a thousandth of an inch in effective diameter is the difference between success and failure in piston improvement, and I would question whether you could see a thousandth of an inch movement with the naked eye.

Q. You think you cannot see any movement whatsoever?

A. I don't know, I will try it. (Witness does so.) Oh, I can see lots of movement. You see about as much movement as with the hand operating the bottom of the skirt.

Q. Doctor, what you really did was to place it with the compressor handle in the line of the wrist pin bosses?

A. Doesn't that compress circumferentially? (Showing to counsel.)

Q. But place it now with the compressor in the line of the slot, and see whether you can compress it?

A. (Witness complies.) Yes, it is about the same. I can almost close the thing.

• • • • • • •

Q. As a matter of fact, in the piston Exhibit 17 or Exhibit 1, the expansion is compensated for by this Keystone relief, I mean this Keystone structure on the non-thrust side?

A. In part only.

[fol. 126] Q. But that is the purpose of that tapered relief?

A. The purpose of the tapered relief is to put less of a burden on the slotting and take care of more of the expansion in the ways mentioned.

Q. And in some of the pistons, this being a Ford piston, in some of the pistons that relief is accentuated more, as shown in Exhibit 17?

A. Yes, it is a little, and in some there is no taper at all. In some the section there is rectangular.

Q. You said some of these pistons have been operated without this Keystone relief, some of these Maynard patent pistons?

A. Yes.

Q. What company operated them?

A. The Willys-Overland and the Oakland Company.

• • • • • • •

[fol. 127] Q. You wouldn't, as an engineer, say, Doctor, that the webs from the center of the head to the end of the web, really flexed at the top in Exhibit 17?

A. Not a whole lot, but they flex.

Q. Well, it is microscopic, isn't it?

A. Well, I don't know why you insist on that because I have said that there are a number of things that contribute to that compensation for expansion, and I can't say what percentage this element contributes and what percentage another element contributes, but I have said that the webs flexed, and I have said that the skirt flexes.

Q. But you don't want to say whether it is microscopic or appreciable?

A. Oh, I think it is not microscopic.

Q. Now, Doctor, the flexure of the skirt should be the greatest at the top, shouldn't it?

A. Flexure—not necessarily. The compensation for excessive expansion must be greatest at the top, but the flexure need not be greatest at the top.

Q. Well, it is more desirable to have a flexure at the top than at the bottom, isn't that right?

A. If you depend entirely on flexure for the compensation for excessive expansion, that is true, but only in that case.

* * * * * * *

[fol. 128] Q. Now, in this piston like Exhibit 17, for instance, as the piston heats up, the whole structure, particularly in the region of the wrist pin bosses, tends to expand along the lines of the wrist pin bosses, doesn't it?

A. Yes, it expands in all directions, but it expands more in the direction of the wrist pin bosses than in other directions, that is the slotted skirt type.

Q. And the effect of that is to throw these bearing faces against the cylinder, press them out against the cylinder, isn't that right?

A. On the slotted side, that is true.

Q. And on the unslotted side also?

A. No, on the unslotted side it tends to reduce the effective diameter of the piston.

Q. Pulls it in?

A. Yes.

Q. Why is it, then, that this relief, this Keystone relief is put on the unslotted side?

A. To provide some place for the highly expanded metal to go in the cylinder barrel. If there were no relief there would be no place for that extra expansion to go.

Q. But on the slotted side the relief is put in there in order to take care of the pulling out at the top of the structure?

A. It serves the same general purpose as the relief does on the main thrust faces.

Q. The relief on the non-thrust, the split side, is for the same purpose then as on the other side?

A. That is it serves that purpose. A piston at any given instant can be regarded as a rigid structure. Now, at another instant the shape of it may be a little different due to flexing, but insofar as it is at any instant a fairly rigid structure, the same rules apply on one face as on the other face.

Q. The Keystone is really the reverse in the Jardine patent?

A. Yes, it is.

Q. Why is that?

A. Why, I don't know just why, excepts that perhaps the particular web construction there in the Jardine requires a fairly wide distance between the webs where they [fols. 129-130] join onto the head flange, for economical manufacture, and for ease of removal of the core sections inside, and the width need not be so great at the bottom. And that perhaps is responsible for the structure shown there.

Q. Do you know Mr. Jardine?

A. Yes.

Q. He is an engineer?

A. Yes.

Q. And he would have some definite purpose for a thing like that, wouldn't he, a construction like that?

A. Oh, possibly. The main purpose would be that such a piston would work in a motor.

Q. The Chrysler Company has used pistons like Exhibits 1 and 17, haven't they?

A. Yes, like Exhibit 17.

Q. Do you know who furnished them?

A. The Aluminum Company of America has furnished them, and I think the other suppliers have also provided the same piston.

* * * * * * *

[fol. 131] Q. The Maynard patent states, at page 1, line 12: "To avoid sticking or freezing of this skirt, due to expansion, certain constructions of pistons have provided the skirt with a longitudinal slot therein to compensate for expansion, but there is one serious difficulty with all such constructions, viz., the tendency for the lubricating oil to work up beyond the skirt and rings and into the explosion chamber." Is it correct that at the time that Maynard applied for his patent that was the practice?

A. At the time he applied there wasn't much practice on it, by the time he applied; but at that time I feel quite certain that he had the Jardine piston in front of him.

Q. You say he had the Jardine piston in front of him?

A. I should think so.

Q. You know that, or is that just opinion?

A. Well, the Jardine piston had been tested out in motors and was about ready to be adopted, I think, when this Maynard development came along.

Q. Was that Jardine piston sent over to Maxwell where Mr. Maynard was at that time?

A. Well I don't know about that, but the piston was in the Aluminum Company laboratory, I think, at the time this application was filed.

Q. You have reason to believe Mr. Maynard saw that Jardine piston?

A. Well, I believe it was. I was in the laboratory a good deal about that time and this was really a situation which gave us a considerable amount of concern, that is, the proper utilization of aluminum pistons in motors, and I recall the tests made on Jardine pistons and that it was thought that the Jardine piston would probably be adopted in the Maxwell production, and then the Maynard piston was forthcoming and the Maynard piston was the one that was adopted in the car.

Q. Was the Jardine piston tested out in the Maxwell car?

A. It was tested out, I think in the Maxwell engine in our plant, whether it was tested in Maxwell cars or not, I am not sure.

Q. Maynard was chief engineer of Maxwell?

A. He was an engineer there, according to the best of my knowledge; whether he was chief engineer or not I don't know.

Q. At the time the Jardine piston was being tested out?

A. Yes, I think so.

Q. But did you have a Maxwell at the Aluminum Company plant to try out this Jardine piston in?

[fols. 132-134] A. I don't recall we had a car, I think we had a Maxwell motor.

Q. And that particular Jardine piston was of the construction shown in the Jardine patent?

A. As I recall it, substantially.

Q. Well, it had what you might say a slot across the top below the ring land and a vertical slot connecting with it to form a T?

A. Yes.

Q. Then instead of taking the Jardine piston, the Maynard type piston was put into the Maxwell cars?

A. Yes.

* * * * * * *

[fol. 135] Q. Now, before the recess we were talking about pistons——

A. May I complete my statement?

Q. Oh, yes, certainly.

A. You asked for a sample of the Willys-Overland piston showing the skirt portion at the top with the straight up and down section as opposed to the Keystone type of section. I was able to locate a rough casting of the Willys-Overland piston and also a rough casting of the Oakland pistons with that construction. These are not completed pistons but when completed they have the horizontal slotting and one face has the vertical slot. I produce the Oakland rough piston casting and the Willys-Overland rough piston casting.

Mr. Bruninga: The castings are marked for identification, the Willys-Overland as Defendants' Exhibit 3-M, and the Oakland as Defendants' Exhibit 3-N.

Q. And these do not show the Keystone relief?

A. No.

Q. Do you know, however, how they looked when they were finished, finally finished up?

A. I don't recall that I have seen either of those in the finished shape, at least to examine them carefully.

* * * * * * *

[fol. 136] Q. Now, in your direct examination you explained the utility of the Maynard piston in preventing oil pumping. I don't think I got a clear picture of that. Can you elaborate that a little bit, how oil pumping is prevented with this Maynard patent construction?

A. Yes, I would compare it with the construction shown in Jardine, Figs. 6 and 7. When the oil is sprayed or splashed or thrown against the cylinder walls in the Jardine construction, it is not spread evenly over the wall of the

cylinder, especially in the parts not traversed by the rings, and that causes an uneven distribution of the oil in the cylinder which makes it easier for the oil to by-pass the rings and get up into the combustion chamber. One function of the large bearing at the bottom of the skirt in May-
[fol. 137] nard is to spread that oil evenly on the cylinder wall, which makes the accumulation of oil at the ring groove sections more even and thus militates against the oil passing the ring section up into the combustion chamber.

* * * * * * *

[fol. 138] Q. Now, in this Jardine patent the statement is made, last paragraph on page 2 of the specification: "While I have shown my invention applied to the slipper type of piston as distinguished from the skirt type it is to be understood that the invention is essentially applicable to other forms of construction, the scope of the invention being indicated by the appended claims." Is it your understanding from that that this feature may be applied to the ordinary skirt piston the same all the way around, the Jardine patent feature?

A. Well, I think certainly the Jardine features can be so applied, yes.

Q. And that would mean continuing the circumference of the slippers in Fig. 8, for instance, so as to make a skirt?

A. No, at least unless relief were provided in that region, it would not embody the Jardine disclosures, as I read them.

Q. Now, in the Jardine construction both slippers are slotted, are they not?

A. They are so shown, yes, in the drawings.

Q. In fact the specification states distinctly, page 1, line 75: "The segments of each pair are separated from one another by a longitudinally extending slot 12, said slot preferably being inclined or spirally arranged as shown"?

A. That is correct.

Q. He don't point out any particular virtue of only splitting one of the slippers?

A. I think not.

Q. In fact, Jardine describes in his specification that the larger slipper 30, Fig. 8, for instance, is on the thrust side?

A. I think so, on the side of maximum thrust.

[fol. 139] Q. And that side is split?

A. Yes.

Q. As well as the non-thrust side?

A. Yes.

Q. Now, Mr. Jardine in his patent refers to a proportioning of web thicknesses, page 2, line 34, in order to permit flexing of those webs. There has to be some proportioning, as he describes, in order to secure that flexing, isn't that right?

A. Yes.

Q. The proportioning of thickness cannot be ignored at all if you desire a flexible web?

A. No.

Q. And Mr. Jardine also described the webs as being definitely separated from the head by slots 29 and 29a in Fig. 6, and that is also necessary in order to really get a springing of those webs, flexing of those webs?

A. At the top, yes.

Q. Now, there are two constructions illustrated in the Jardine patent. In one construction, as shown in Fig. 2, for instance, these webs extend directly from the head, isn't that right?

A. Yes.

Q. Somewhat comparable in that respect with the direct connection in the Spillman & Mooers patent? Oh, I don't mean as to details but I mean just as to that feature?

A. Yes, more particularly, however, in the Gulick.

Q. Well, I expected you to say that. Now, in the construction shown in Fig. 7 the webs are connected with the ring flange?

A. Yes.

Q. He really describes those as equivalent constructions, doesn't he?

A. I am not sure that he does. I think he describes them as two separate constructions. He describes Figs. 6 to 9 as a modified form of piston.

Q. Now, in both constructions there is a cross web or rib, whatever you may call it, 27, Fig. 7, or 9, Fig. 1, which connects up with that web?

A. Yes.

Q. Now, the Jardine patent says at page 2, line 76: "It will be seen that this last form of construction is based upon the same principles as the first form and further detailed description is therefore unnecessary. The main difference between the last form of construction and that first de-

scribed resides in the webs 35 which support the wrist pin bosses and the guide portions, said walls being joined to the head structure at the lower edge of the ring flange 23 rather than springing from the head disc as in the first form of construction." Now, when he says it is based upon the same principle, isn't it your understanding, then, he considers those two constructions equivalent, whether he [fol. 140] brings the webs right from the head with the cross rib or brings them from the ring flange with the cross rib?

A. Well, I don't think that is a justifiable conclusion necessarily. At any rate certain of the features would operate substantially the same in the two constructions. The main advantage over 6 and 7, as I see it, is that there is a truly single-walled construction in which the various parts cooperate to make for both the strength portions and the bearing portions and the flexible portions of the piston, and that piston can be manufactured in permanent molds, readily, whereas the other one cannot be readily manufactured in a permanent mold.

Q. Another point is that Fig. 7 looks somewhat more like the Maynard patent construction, while the other figure, Fig. 1, looks somewhat more like the Spillman & Mooers, as far as whether the attachment is from the ring flange or from the head itself?

A. Well, I think it may be assumed that having gone to the trouble of showing the two forms, that it was considered that they were sufficiently different to warrant making the drawing and description.

Q. And also that they were sufficiently similar to include in the same patent?

A. I think so.

Q. I believe you called attention to the ease of casting and particularly this nice little rounded fillet in the neighborhood of 28 and 28a, Fig. 8. That is made rounded like that rather than overhanging in order to get the mold half away from the piston?

A. Yes, it is.

Q. You don't consider that that required a lot of ingenuity, do you?

A. I don't think that that is my province. A lot of these things that seem simple, seem to have escaped the imagination or the efforts of the best brains of the world for many

years. So it isn't for me to say just what required ingenuity and what didn't, after the thing is twelve years or more old.

* * * * * * *

[fol. 141] Q. You would say then from what I previously read from the patent and what you understand this patent is, it contemplated a continuous skirt if properly relieved?

A. Well, I didn't say that it contemplated that necessarily; but it may include it, I don't know. It includes some features of it, at any rate. Apparently this Jardine disclosure is the first real construction which showed how to produce a single walled piston made of aluminum alloy which could be given a sufficiently small clearance at the upper end of the skirt to eliminate slap and yet have sufficient clearance to operate when the motor is hot. That is a very broad statement and that is what I conceive to be the Jardine disclosure.

Q. By a "single wall" do you mean something you could readily get the cores and molds away from?

A. No, I mean a single wall, and I mean just that. The Gulick construction is shown as a double wall, and this Spillman & Mooers is a double wall construction, and the Ray Day is a double wall construction. It was shown how to get the flexibility in a double-walled construction, but I don't think it was shown how to get it in a single-walled construction, prior to Jardine. I know it was a great relief to us, at any rate, when the Jardine piston was developed and it functioned as it did.

Q. Ray Day is a double-wall construction?

A. In part, yes.

Q. But you still say it embodied the improvements of the Jardine patent?

A. It embodies one of the elements, at any rate, of the Jardine patent.

Q. Then, as a matter of fact, the distinguishing feature of the Jardine patent cannot be that it is a single walled structure?

A. Not of the Jardine patent as a whole; but the Jardine disclosure as shown in Figs. 6 and 7 I think can be.

Q. And you would say then Figs. 6 and 7 illustrate the improvements embodied in the Ray Day piston, Exhibits 8 and 9?

A. Possibly one combination, that is the skirt which is both flexible and is relieved upon the bosses or the portions which receive the heat directly from the piston head.

[fol. 142] Q. In a case of this kind, the old maxim applied that things which are equal to the same thing cannot be equal to each other?

A. You can philosophize on that, if you please.

Q. Now, in your discussion of the Jardine patent, I believe you made this statement that the Jardine patent was simply the Gulick patent with the walls cut away, which I understand to be those walls outside of the webs.

A. No, I didn't at least mean to imply that it was simply that.

Q. Well, that is just about what Jardine amounts to, isn't that right?

A. Jardine amounts to more than that.

Q. What more, would you say?

A. In the double duty functions of the various parts of the piston which cooperate with one another to perform the many required functions of a piston and the utilization of a different mode of operation, or an added mode of operation from that of Gulick, as well as a rather marked simplification of structure and the lightening of the piston body.

Q. Well, Doctor, what is the difference, for instance, between the construction shown in sheet 1 of the Jardine patent, in which the webs are suspended directly from the head, and the Gulick patent construction as shown, for instance, in Figs. 1 and 2?

A. (After examining same) With the exception of the web shape they would be to quite an extent similar.

Q. In other words, you cut out the outside skirt part outside of the web?

A. Yes, that is true.

Q. If they are in the way, just cut them out; isn't that the proposition?

A. If they are in the way? I don't know as that is the assumption, that they are in the way.

Q. They are in the way of casting with permanent molds?

A. Well, perhaps the webs are in the way. That is what was previously thought, at any rate. Therefore take out the webs.

Q. There would only be two alternatives: take out the webs, or take out the skirt part?

A. No, there were thousands of alternatives. After a thing like this is once developed and then you see the final results, you may bring them down to a few alternatives; but when people are trying to get these results and grapple in the dark, then there are thousands of alternatives.

Q. How do you know Jardine was trying to get these results?

A. Because I had been connected with him in the same organization for several years prior to his achievement here.

[fol. 143] Q. And he was struggling along on the solution of this problem?

A. Yes, he was, as were many other people.

Q. But Jardine particularly was struggling?

A. Yes, he was working hard on it.

Q. What caused the struggle to begin—was it Ricardo that Mr. Richey in his opening statement, or rather in his reply to my opening statement, referred to?

A. No; the struggle began when the problem came with the excessive expansion of aluminum alloy pistons when operated in cast iron cylinders, and one only had to be connected with the piston business a few weeks to learn of that difficulty.

Q. The same difficulty today?

A. It is still a difficulty, but it has been so successfully solved that millions of these pistons are in use and they are standard equipment on many cars on the street. They also are used on replacement in cars which are put out with cast iron pistons.

Q. Didn't you use the same language before Judge Faris and Judge Kerrigan in the mold cases?

Mr. Richey: I object to that as immaterial.

The Master: He may answer.

A. You were the one that contended, Mr. Bruninga, in those cases that it was the slotting of the skirt that solved the aluminum piston problem and made it a practical thing. I didn't so contend, although I never minimized the advantages of the slotted piston. The position there was very clear, that large numbers of pistons were made and sold and used without slits and slots and that those pistons were regarded as successful at the time. There was not the care taken in the removal of noises in those days that there has been during the last few years, but in so far as the position

taken in the various cases, I think if you will read your opening statements and also your brief carefully, you will see that you were the one that claimed that it was the slotting of the skirt that made the aluminum piston successful.

Q. The expedient of slotting the skirt was the beginning of the automobile piston industry?

A. It was the beginning.

Q. Isn't that what I said: that the beginning of the use of the expedient of slotting the skirt was the beginning of the automobile piston business as far as aluminum pistons are concerned?

A. You mean you didn't use the word "invention." I [fol. 144] don't believe you used the word "invention," but you gave slotting of the skirt credit for making the aluminum piston industry.

Q. Did I say that all the credit was due to that or did I say that it was not until 1920 or 1921 that the piston really came to its own?

A. No; you said that it was the slotting of the skirt that made the aluminum piston business successful.

Q. But you were very forceful in saying it was the permanent molding that made it successful; isn't that a fact?

A. Yes, and it is. These ninety million pistons referred to by Mr. Whitney, and millions more, have been cast in permanent molds. That is essentially the aluminum piston industry and has been in the United States, that is, the permanent mold casting.

Q. And you were representing the Aluminum Company of America, one of the licensees in these suits, weren't you?

A. Yes.

Q. When you stressed the permanent molding as being the solution of the problem?

A. Yes.

Q. And you further stated that the same processes and molds were in use to-day and without any substantial changes?

A. That is correct.

Q. And you didn't tell either Judge Faris or Judge Kerrigan that the splitting was the thing that made it successful?

A. No, I did not, and it wasn't. Millions of pistons were made and sold before the splitting came in. I don't know how long the business would have lasted without the flexibility or how much it would be to-day. We certainly would

have the aircraft business, probably, and a good deal of truck and bus business where noises aren't so important; but those are things I can't answer.

Q. Now, Mr. Richey mentioned a Mr. Ricardo in the reply to my opening statement, and he stated that the Aluminum Company of America had experimented with the Ricardo piston and found it a failure.

A. That is correct.

• • • • • • •

[fol. 145] Q. Now, Mr. Jardine's efforts on the slipper piston, cumulating in the Jardine patent in suit, were the continuation of the experiments with the Ricardo piston, isn't that right?

A. No, not necessarily. The Ricardo piston had been tested and had been found wanting; that is true; but I know for a fact that Mr. Jardine was working on all kinds of pistons at the time.

Q. Well, how many Jardine pistons have been sold; I mean the slipper type?

A. I suspect none.

Q. And how many of Ricardo's did the Aluminum Company of America sell?

A. None, as far as I know.

Q. Then the Jardine piston has never been on the market?

A. I think not. It was proved in, however, and was about ready to be placed on the market when the Maynard piston was brought forth, and the Maynard piston was the one that went into large commercial use.

Q. But the Ricardo piston wasn't on the market?

A. No.

Q. Never was on the market in this country?

A. Not that I know of.

Q. Hupp didn't use it?

A. Not that I know of.

Q. What was the matter with the Ricardo piston?

A. It slapped when it was fitted loose enough so that it would not stick or seize. It seized when it was fitted close enough that it would not slap. And it pumped oil.

Q. And that oil pumping was prevented by the Maynard piston?

A. The oil pumping was greatly improved, yes, by the Maynard construction, that is true.

Q. And you had oil pumping with the Jardine piston?

A. Yes. The Jardine piston was not very satisfactory from the standpoint of oil consumption.

Q. What was the difference between the Jardine piston and the Ricardo piston that you experimented with?

Mr. Richey: I object to that for the same reason.

The Master: Oh, he may answer and you may have your exception. Don't take very much time on this though.

A. The Ricardo piston was really built too rigid. We not only had over in this country a Ricardo representative, a Major Halford, but we had an automotive engineer who [fols. 146-156] was supposed to know a good deal about the Ricardo, about the developments and so forth, and the piston which they supplied the Aluminum Company was one which was built for rigidity, not for flexibility. So that the Ricardo piston as it was known to us was of the head construction more like the Jardine, Figs. 2 and 3, and the webs were thick and fairly massive, the skirt portion or the slipper was also fairly thick, and it was drilled full of holes in order to lighten it; but the Ricardo piston was built essentially for rigidity, to get a rigid structure. While the piston in Jardine flexed in a lateral direction, Ricardo was rigid vertically and laterally. Jardine is rigid vertically but flexible laterally.

Q. The slippers of the Ricardo piston weren't split?

A. No, they were not.

Q. But as far as massiveness and material is concerned, the Ricardo piston was just about a picture of the first sheet of the Jardine patent structure?

A. No; the Ricardo piston had much thicker walls all around, webs as well as skirt section.

Q. I don't mean as far as thickness of metal, but I mean a head with a couple of webs extending down, and wrist pin bosses carried by the webs, and slippers on the webs—that was the Ricardo piston?

A. That is correct.

Q. And Jardine proceeded to split the slippers?

A. Well, he did more than that.

Q. Well, he did that, didn't he?

A. He did that, yes.

Q. And Gulick also did that, split the skirt?

A. Yes.

Q. Between two webs?
A. Yes; Gulick did that.
Q. And Jardine made the second split; is that right?
A. Yes.
Q. But he made it on both sides?
A. Yes.

• • • • • • •

[fol. 157] Q. The Jardine patent goes quite a length, doesn't it, on page 2, in stating that the webs should be properly proportioned to permit that flexing?
A. Yes.
[fol. 158] Q. And the Gulick patent doesn't say one word about it, does it?
A. He states that the structure should flex in response to cylinder wall pressure.
Q. He does in the patent as it stands now to some extent; but in the absence of any statement of that kind that the webs do flex, what have you to say then? Do you think the disclosure is sufficient just from the drawing to delineate that which Mr. Jardine found necessary to state quite in detail?
A. It is not a treatise telling one how to design any particular piston, as I see it; but the principle of the compensation for excessive expansion by flexing by means of horizontal and vertical slots is clearly covered in the Gulick disclosure.
Q. Well, I am asking now about the drawings. You can read drawings, and to your mind they give you a complete picture, don't they?
A. Fairly complete, yes.
Q. And those drawings, with the simple statement that the piston is made to take care of expansion, that would be enough to give you the idea that the webs should be properly proportioned to flex?
A. I think so.
Q. Due to the inherent structure?
A. Yes.

• • • • • • •

[fols. 159-168] Q. What have you? No. 1 or 17?
A. I have Plaintiffs' Exhibit 17.
Q. Well, take Exhibit 1, because that is what we particularly referred to.

A. In Plaintiffs' Exhibit 1 when the slot is completed, it involves as one of the elements of the combination the flexing as the result of a horizontal and a longitudinal slot at both top and bottom of the skirt and at all points between.

Q. Well, Exhibit 1 really flexes only at the bottom, doesn't it?

A. No, I showed you this morning that it flexes at the top as well, and furthermore I stated that unless the slot is completed at the top of the skirt, that is, unless the vertical slot joins the horizontal slot, the piston is not successful for use.

Q. Well, you showed me by applying a pressure many times that encountered in an automobile engine.

A. Yes, but I showed you many times the deflection that is required to compensate for the excessive expansion also.

• • • • • • •

[fol. 169] Q. Would you say that the yield of the web in the Gulick structure is the same as in the Jardine structure, I am talking about webs now as they are illustrated in Figs. 1 to 4 of the Gulick patent and 6 to 9 of the Jardine patent?

A. I should say that the yield of the web perhaps is somewhat greater in the Gulick construction as shown than in the Jardine construction.

Q. Would you say that both of the vertical flexure and lateral flexure of the web?

A. Oh, neither of them has any vertical flexure to speak of.

Q. In other words, there is no flexure in the Jardine which permits the bottom of the skirt to tip in?

A. No, I think not, at least not to any great extent.

Q. Will you refer to the Jardine patent, Fig. 1, in connection with the descriptive matter beginning line 34 of page 2, and going down to line 53, the end of the paragraph, and tell me whether there is any vertical flexing contemplated there, particularly with reference to the line 13-13, Fig. 1?

Mr. Richey: I object to the question as immaterial. The one part of the disclosure has got to be taken in connection with the other part. What if one part don't say anything

about vertical flexing, it is immaterial whether it does or not, unless you consider it with the entire disclosure.

The Master: Same ruling.

A. I can't see anything in there that refers to vertical bend, vertical flexing. The statement is that the web 6 will bend along a line extending vertically down from the ends of slots 11a, that is, the bending will be a horizontal bending, but it will be a horizontal bending along a vertical line as the axis of bend.

Q. That is the way you construe that language?

A. Yes.

Q. Now, that line on Fig. 1 will correspond about to the line running from the inner end of the slot 29a on Fig. 6 of the Jardine patent, isn't that right?

A. That is correct.

[fol. 170] Q. And in Fig. 6 the slot is not shown as far in as Fig. 1?

A. No.

Q. That shows a variation in the flexibility of that skirt; in other words the flexibility of the web 6 in Fig. 1 will be greater than in the webs 25 in Fig. 6?

A. Well, I don't know what the flexibility requirements might be, what the size of the piston might be.

Q. Well, as far as those particular constructions are concerned, if the slot extends in further there will be greater flexibility of the web; you gather that from the sentence beginning line 40, page 2, don't you?

A. Well, the means are described for helping the web to flex. In the first place the horizontal slots are put in at the top of the skirt, and then mention is made of proportioning the web thickness and also the skirt thickness to facilitate the flexing. I don't conceive that there is meant to be a particular difference between the one and the other in the function and mode of operation.

Q. Well, you said in answer to a previous question that there is no vertical flexing of the skirt slipper contemplated because of the slot 29a in Fig. 6 or the slot 11a in Fig. 1, but there is a lateral flexing contemplated of the web?

A. Yes.

Q. Well, now, as a matter of fact with the same thickness of web, the closer that slot is placed to the center of the piston, I mean the slot 29a, Fig. 6, or the slot 11a, Fig. 1, the greater will be the flexibility of that web; is that right?

A. That is true with a given height of web.

Q. I am assuming all the other dimensions to be the same?

A. That is correct.

Q. So as a matter of fact it is true that taking the two structures, Figs. 1 and 6, that with the thickness of the web and the depth of the web the same, and with the diameter of the piston the same, the webs of Fig. 1 will have greater flexibility than those of Fig. 6?

A. They might have, yes.

Q. Well, isn't it a fact they do have, Doctor?

A. Well, I don't know whether there is any point to that. All these pistons are supposed to describe pistons that flex and also pistons that have certain other characteristics.

Q. Well, regardless of whether there is any point to that, Doctor, as a matter of fact isn't it so that my question should be answered in the affirmative?

A. I don't know that it is. I would like to make a little study of it, if you think there is any point to it.

[fol. 171] Q. What do you think, then, is meant by the statement here: "If said slots are terminated closer to the guide segments 10, 10a the region of bending will be moved outward correspondingly"?

A. He means just what he says. He gives you a means for controlling the degree of flexibility so as to get greater flexibility if you need it or less flexibility if you don't have to have it.

Q. And he says he does that by the position of the end of the slot with reference to the surface?

A. That is one means.

Q. That is the means that is mentioned right there?

A. He also mentioned web thickness and he mentioned skirt thickness.

Q. I am coming to that. I am just assuming all the other conditions to be the same. That is the fact, then, isn't it, that if you vary the extent of the slot through the center of the piston, you vary the flexibility of that skirt?

A. That is correct.

Q. Now, we will come to the thickness of the web. Now, Mr. Jardine describes here specifically in the next sentence, and also in the preceding paragraph, the feature that these webs 25 of Fig. 9, or 6 of Fig. 4, decrease in thickness from the cylinder wall to the boss, is that right?

A. That is correct, as shown in the drawings.

Q. And the greater that decrease in thickness, all the other conditions being the same, the greater will be the flexibility of the web?

A. That is correct. And also the less the absolute thickness.

Q. You don't find any specific description of that kind in the Gulick patent, do you, I mean of the tapering or the decrease in thickness of the web?

A. No.

Q. You don't find anything of that either in Plaintiffs' Exhibit 1, the Sterling type piston?

A. No, I think not.

Q. You don't find any cutting in of the web towards the center of the piston in that Exhibit 1, do you?

A. No.

Q. How much of a cutting in do you find there, in inches, from the cylindrical wall of the skirt towards the center of the piston? Oh, about—it is not over an eighth of an inch, is it?

A. (After measuring same.) Exhibit 1 is 3/8 of an inch, approximately, in from the web. Of course what counts for flexibility is the distance to the outer diameter of the skirt.

[fol. 172] Q. Where did you measure from; did you measure from this inside part to the part on the relief?

A. I measured from half-way between the angular cut.

Q. Half-way to the relief?

A. Yes.

Q. But you didn't measure from the half-way where the web turns in, where the web turns circumferentially?

A. No.

Q. Those two points are just about on a line, are they not?

A. That is something more than a quarter of an inch.

Q. And I suppose on an extreme relief, then, you would measure from the top of the keystone to the point of origin?

A. What is the idea about where I would measure from?

Q. Well, I just want to know.

A. Aren't we after flexibility in these skirts, webs and so forth?

Q. It is immaterial what you think. I want to know where you measured from in order to get that.

A. That is according to what I want to find out.

Q. Well, if you want to get the length?

A. No, if I want to get the flexibility——

Q. No, I want the actual length of the web. We will talk about flexibility later. The actual length of the web from where it is attached to the head to where the web ends. You said that is about a quarter of an inch; is that right?

A. This particular web ends in the skirt, insofar as the structure of Plaintiffs' Exhibit 1 is concerned, as affects the flexibility.

Q. And I suppose if Mr. Jardine had a relief right out to the center, then you would measure from the point where the slot ends right out to the center of the relief?

A. I would make the measurements which would be of importance in determining flexibility. When he makes a design to gain flexibility, then I should think it is flexibility we would be interested in.

Q. But the actual length of the web, now, where the web connects with the skirt, with the circumferential part of the skirt, is about a quarter of an inch in that Exhibit 1?

A. From the inside of the piston, that is, from the point where the web is cut entirely through to the point where the relief ends, is something more than a quarter of an inch. Of course there is considerable flexibility, or some flexibility at any rate, in the web at the upper part where it comes down to the knife edge by virtue of the slotting operation which cuts the horizontal slots in the piston.

[fol. 173] Q. Now, the Jardine patent structure, the thickness of the slipper from the center, that is where the split is, to where it joins the web, increases, does it not—the thickness increases from the center to where it joins the web?

A. It does, as shown in the drawing.

Q. And you don't find that in Plaintiffs' Exhibit 1, do you, talking now from the part of the skirt from the split to where it joins what you call the web?

A. It is difficult to say without a section, but I would assume that there is no taper there on the skirt.

* * * * * * *

Q. Now, you explained on your direct examination some peculiar action of flexing in the Jardine structure that I didn't quite understand. I understand the flexing of the webs, all right, but I believe there was some peculiar struc-

ture that you described as the peculiar mode of operation from the head down, that is, when the head heated up, that there was a certain action took place. Can you elaborate on that a little bit, in other words, is there anything peculiar in the connection to the head that imparts particular virtue to that Jardine construction?

A. Well, I mentioned two or three other things besides [fol. 174] flexibility which help to compensate for the extra expansion of the aluminum over the cast iron. One of those was the relief around the bosses permitting the piston to adjust itself to the cylinder wall by virtue of distortion. If the cylinder is round in cross section and the piston is round in cross section, then the expansion of the piston against the cylinder wall produces pressure at all points of the circumference and such pressure tends to make the piston rub too hard and eventually it may seize. If the piston is relieved on part of its circumference, then the pressure against the remaining part of the piston is available to help relieve the total pressure by distortion of the piston, the relieved portions having an outward movement. Now, that is helped also by the fact that you have the horizontal slots, that makes the distortion of the piston easier. Then there is also the factor of the excess expansion of the piston head causing the top of the skirt to expand more than usual as a result of its own temperature, and that I term mechanical expansion. In the Jardine construction that mechanical expansion would be one which normally should spread the slots farther apart. That would be resisted by the junction of the skirt or guide sections with the side walls of the cylinder, and the effect of it is to produce distortion in the piston, if there are no slots. If there is only one slot it also produces distortion and draws the bearing face inward, thus assisting with the clearance on that particular side. Now, if there are two slots it perhaps calls in a greater demand for the action of the flexible features of the skirt.

Q. As I understand, then, the characteristic features of such a construction in order to secure that result, are first reliefs opposite the wrist pin bosses?

A. Yes.

Q. Second, some sort of a horizontal slot?

A. Yes.

Q. Third, some sort of a vertical division or slot between the wrist pin bosses?

A. Well, to get the maximum effect, yes, the vertical slot must be there. That is, in order to get the maximum compensation for excess expansion, the vertical slot must be there.

Q. And it is your position it don't make much difference whether it is a structure like Plaintiffs' Exhibit 1 in which there is a large relief, or whether it is a structure like Defendants' Exhibit BBB, of course slotted entirely through, in which there is the relief cut into the piston wall?

[fols. 175-177] Mr. Richey: You are assuming Exhibit 1 is cut entirely through?

Mr. Bruninga: Yes, I am assuming they are cut all the way through.

A. Those two structures function substantially the same.

Q. And it don't make any particular difference whether the slot is on one side or both sides, the horizontal slot, one side or both sides of the piston?

A. Well, it makes a difference, yes. There are other things that have to be taken into consideration if the slot, the horizontal slot is restricted.

Q. You say you would still have the advantageous features?

A. Yes, you have a much more difficult problem in making an integral single-walled piston and making the structural changes necessary to compensate for the excess expansion, than you do in the double-walled piston. Many of the detail changes in the single-walled piston produce the same general effect but in somewhat different way.

Q. And it don't make much difference whether the vertical slot is exactly in the center of the skirt or not, exactly between the two wrist pin bosses in the center of the slipper, or exactly in the center between the two wrist pin bosses?

A. Whether it is exactly in the center or not I think makes much less difference than it does whether it may be opposite the wrist pin bosses; that is, the slot should be between the wrist pin bosses.

Q. That is what is essential?

A. Yes, in these constructions.

Q. That is your position when you consider this Jardine patent and what it teaches, taken in general and not in details like we are talking about?

A. Yes, it teaches a broad principle. The Jardine patent, I think, teaches for the first time the means for getting a single-walled piston which by combining several features so as to compensate for the excess expansion especially at the top of the skirt, produces a result not theretofore produced.

* * * * * * *

[fols. 178-180] Q. You know of course a patent describing that structure was included in the Simmons case, don't you?

A. Yes, certainly.

Q. You also know, or rather counsel has admitted, this particular piston here was alleged to be an infringement of that patent?

A. I don't know that.

Q. Counsel has admitted that. You disagree, then, that this piston don't have any of the characteristic features of that piston (referring to Defendants' Exhibit 3-Q and Plaintiffs' Exhibit 1)?

A. Did I say that?

Q. Well, I am asking you.

A. I don't know.

Q. It does not have the flexible feature, does it?

A. No.

The Master: The 3-Q, what do you call that?

Mr. Bruninga: Call it the ribbed piston.

Mr. Richey: You know what you call it.

Mr. Bruninga: It is known as the Franquist piston?

The Witness: Yes.

Q. Wasn't that piston used in the Pierce-Arrow car—I am not asking you about the date?

A. I don't know. That would mean nothing. A trunk piston was used in a Pierce-Arrow car, too.

Mr. Richey: You claim it is made after the Franquist patent 1,153,902, in the prior art?

Mr. Bruninga: Yes.

* * * * * * *

[fols. 181-184] Q. And by the strut piston you mean this piston, Exhibit AAA?

A. Yes, that is one of the Strut patents.

* * * * * * *

[fol. 185] Redirect examination.

By Mr. Richey:

Q. You have spoken of the difficulties with the trunk type aluminum piston. Do you know what if any efforts the United States Aluminum Company or its predecessor or associated companies made to try to find a solution for that situation?

A. Yes.

Q. Will you just tell us what those efforts were, and when they began and what were the results of them?

A. The efforts were continuous from the time that I became connected with the Aluminum Castings Company in 1915. Not only were they continuous but they were strenuous. We heard of various designs of pistons in various ways to take care of the excessive expansion, and a number of such things were tried out and a number dismissed as seeming impractical, and that was a problem that was continuously before the Aluminum Castings Company between 1915 and the end of the war. The war activities minimized the international exchange of ideas, as everyone knows, but shortly after the war was over, namely, early in 1919, or approximately late in 1918, I recall the beginning of interchange of international ideas on the subject. After a survey of what was available abroad and the information that had been gained over there, it seemed to us that the Ricardo piston perhaps represented the best that they had to offer from abroad. There were three engineers in the United States from England shortly after the war, all of them interested in exploiting the Ricardo piston in the United States. One of those is an internationally famous automotive engineer, Lawrence Pomeroy. Another man who appeared to have the business negotiations as his responsibility, was Major Halford, but he also represented himself as an engineer. Another engineer by the name of Parnell, as I recall his name, was in this country for the purpose of handling the details of testing and installation of the Ricardo pistons. The Aluminum Castings Company

was in contact with these gentlemen and tried out the Ricardo pistons early in 1919. The laboratories at Harvard Avenue were almost turned over to the piston problem in the Spring of 1919. It seemed that there was little time in the dynamics laboratory, at any rate, for anything else but piston tests. These Ricardo pistons were made under the supervision of the Ricardo representatives and tested partly under their supervision and partly under our supervision. The tests were exhaustive. There was considerable impatience on the part of the Ricardo representatives with reference to the delay in approval by the Aluminum Castings [fol. 186] Company or its successor. I just don't remember the date of the incorporation of the Aluminum Manufacturers, Incorporated, but that makes no difference, because my relations at any rate did not change over there, neither did those of a number of other people in the laboratory. The Ricardo pistons, however, were unsuccessful. If fitted closely enough to avoid noise, they seized. If fitted loosely enough to avoid seizure, they made noise; and there was also trouble from oil consumption. As I recall it, every expedient for making the pistons work was tried out and still the pistons were not successful. The solution appeared to be at hand with the Jardine piston, and after that the direction of work in the Aluminum laboratories has been largely along refinement, perfection and change of the flexing method, and also in the direction of the utilization of the Invar Strut.

Q. By reference to the Jardine piston, you mean the piston of the Jardine patent in suit here?

A. Yes.

Q. Now, who was Harry R. Ricardo?

A. He is quite a noted English automotive engineer.

Q. And was he prior to the time his patent was taken out?

A. Yes.

Q. Now, who was trying these expedients to make this Ricardo patent work?

A. Both Mr. Parnell, representing him, and Mr. Jehle, who was in charge of the tests.

Q. That is Mr. Ferdinand Jehle, now an engineer with the White Motor Company?

A. Yes.

Q. And he was a well known engineer at that time, too, was he?

A. Yes.

Q. Anybody else there working on the problem, observing the tests?

A. Yes, Mr. Wesley, Mr. Carpenter, Mr. Allyne and Mr. Blank, who is also an automotive engineer with the White Motor Company, Mr. Jardine, as well as myself.

Q. Mr. Welty there also?

A. I think he was not there at that particular time.

Q. And those people you have named are automotive engineers, aren't they?

A. Not all automotive engineers, no.

Q. Well, many of them were, weren't they?

A. Yes.

Q. Mr. Pomeroy also?

A. Oh, Mr. Pomeroy, yes.

Q. Mr. Parnell?

A. Mr. Pomeroy was actively interested in the tests and also Mr. Parnell.

[fol. 187] Q. What kind of tests were made on the Ricardo piston?

A. Engine tests, the tests that I have named were made in the laboratory, but pistons were also fitted to motors in cars.

Q. That is the usual indoor and outdoor tests?

A. Yes.

Q. Over what period of time were these tests made?

A. The tests were going on rather actively in, I should say, it was a period of four or five months at any rate.

Q. Now, you were asked about the commercial use of the piston of the Jardine patent. Will you state what was done towards developing that piston for commercial use after it was first invented by Mr. Jardine?

A. There was an attempt to commercialize the Jardine piston in the slipper form and tests were under way in a number of places, both laboratory and road tests, and the piston was receiving favorable consideration. I don't recall the exact date but I do recall an instance of tests in the Templar car here in Cleveland, which were quite satisfactory. But by the time the Jardine piston was found to be satisfactory from the standpoint of taking care of clearance, as mentioned yesterday, the Maynard piston became available and it was a preferable construction.

Q. And it was elected to push the piston shown in the Maynard patent instead of that in the Jardine patent?

A. That is correct.

Q. How far had these tests on the Jardine piston gone with respect to the commercial utility?

A. So far as I recall, the effect on the organization, on the inside, was that we felt the problem had been solved and it was only a question then of the proving in in the field, and that proving in had gained considerable headway by the time the Maynard piston came along and proved in still better.

Q. Will you compare this piston shown in this Ricardo patent 1,294,833, in structure, mode of operation and results, with the pistons of each of the patents in suit?

A. Considering first the Gulick patent, the construction shown in the Ricardo patent is not the same as that shown in Gulick, although it does have some similarity in that the web are depending from the head portion proper in which the wrist pin bosses are mounted. The skirt construction is quite different from that shown in Gulick, and the method of operation is different, in that Gulick shows flexibility of the skirt and Ricardo does not. The result is different [fol. 188] because Gulick gets compensation for extra expansion and Ricardo does not.

In so far as the Jardine construction is concerned, that shown in Figs. 1 and 2 is quite similar to that of Ricardo. The web sections of Ricardo are considerably thicker than those of Jardine. The Ricardo piston apparently is made for rigidity and stiffness, where the Jardine construction is made for rigidity only in the vertical direction, but is made for flexibility in the lateral direction. In so far as mode of operation is concerned, the mode of operation is different in the Jardine patent from what it is in the Ricardo construction, because Jardine is designed to operate by utilization of the flexible webs and skirt and Ricardo is not. In so far as result is concerned, the Jardine attains the result which the Ricardo does not. The Ricardo cannot be fitted closer than the trunk type of piston, for example, whereas the Jardine construction can be fitted in the cylinder much more closely. The construction, even in the Jardine Figs. 6 and 7 is different from that shown in the Ricardo patent. This is a matter of history on that point, I might mention that the construction shown in Figs. 6 and 7 of the Jardine construction was capable of being manufactured in a permanent mold. Now, the Ricardo construction is not, or at least was not at the time, with the molding art available, but nevertheless the Aluminum Cast-

ings Company had in mind that they could not put an aluminum alloy piston on the market and make it successful unless it were cast in a permanent mold. The Ricardo people insisted, however, on this type of construction as shown in the Ricardo patent, as having peculiar advantages and insisted that unless we utilize that construction we did not have a Ricardo piston. So that the construction shown in Figs. 6 and 7 of Jardine is different from that of Ricardo by virtue of the direct connection of the webs to the bottom of the ring flange rather than the connection of the webs to the head of the piston. The Ricardo construction is, then, in part a two-walled structure, whereas the Jardine construction shown in Figs. 6 and 7 is a single walled construction.

In so far as the Maynard patent is concerned, the construction is different from Ricardo, the mode of operation is different and the result is different.

* * * * * * *

[fol. 189] Q. You were asked yesterday to produce specimens of pistons made under the patents in suit in which the edge of the relief was straight instead of inclined, and produced the two unfinished castings, Exhibits 3-M and 3-N. Will you state why you did not produce finished castings?

A. The finished castings were not available, I couldn't locate them.

Q. Have you produced drawings which show the piston which is finished from these two castings?

A. These two drawings have just come in and I have not had an opportunity to compare them with the pistons as yet. Drawing D-2376 X——

Mr. Richey: Marked for identification Plaintiffs' Exhibit 21.

A. —appears to be the drawing of the finished piston, of which Defendants' Exhibit 3-N is an example. The drawing and the piston both have the same number, namely, 481,678.

Mr. Richey: The next drawing I mark for identification Plaintiffs' Exhibit 22.

[fols. 190-191] A. (Continued) This drawing is also one for the finished piston of Defendants' Exhibit 3-M, both

the drawing and the piston have the number 323,135. The number of the drawing is D-2460-X.

Q. Were the pistons illustrated in the drawings marked Exhibits 21 and 22 made and sold?

A. To the best of my knowledge, yes.

Q. In substantial quantities?

A. Yes.

Q. Now, those, each drawing shows this line vertical, does it not?

A. Yes.

Mr. Richey: I offer these drawings in evidence as Plaintiffs' Exhibits 21 and 22.

Q. The line to which I referred in the next preceding question as being vertical, was the line showing the boundary between the web and the thrust faces, which I mark XX in each of the pistons. That is the same line you referred to in your answer to that question?

A. Yes.

* * * * * * *

[fols. 192-195] Q. Is there anything in the pistons of the Jardine patent in suit which back up the thrust on the thrust faces, particularly the faces on which the maximum thrusts come?

A. Yes, the webs are located in such a position as to support the piston during the side thrust and also one of the slippers is made larger than the other, and it is the intention that the slipper with the largest face shall be used in the position of maximum thrust in the motor.

* * * * * * *

[fol. 196] With reference to the Jardine patent, there is very little in common even in construction with the Spillman & Mooers construction. In one of the Jardine constructions, as shown in Figs. 1 and 2, the head is attached to the guide section by means of webs directly attached to the head, but such webs more nearly correspond to the Gulick webs than to the Spillman & Mooers webs. In so far [fols. 197-198] as the constructions shown in Figs. 6 and 7 of the Jardine patent are concerned, there is little in common between Jardine and Spillman & Mooers. The Jardine construction is designed to compensate for extra expansion

at the top of the skirt by utilizing several methods of compensation, including flexibility of the skirt and web. The mode of operation of the Jardine construction is therefore different from that of the Spillman & Mooers. In so far as result is concerned, the Jardine construction gives a different result from that of Spillman & Mooers, and when aluminum is used for the piston material it gives a superior result in so far as fitting is concerned.

* * * * * * *

[fol. 199] Q. Now, will you proceed with the other patents in suit?

A. The structure of Defendants' Exhibit CCC is not [fol. 200] specifically that shown in Jardine. It does, however, operate in a manner similar to that of Jardine, especially at the top portion of the skirt. There are the horizontal separation slots between the head and the skirt in Defendants' Exhibit CCC as well as in the Jardine construction. There is relief around the bosses in Defendants' Exhibit CCC the same as in the Jardine construction, considering for comparison purposes Figs. 6 and 7 of the Jardine patent. The skirt portion adjacent the bosses may be considered broadly the equivalent of the Jardine web construction in so far as mode of operation is concerned. The same analysis of the methods of compensating for the extra expansion at the top of the skirt in Exhibit CCC as applied to Jardine, with one of the bearing faces slotted only, can be made. That is the compensation for extra expansion at the top of the skirt in Defendants' Exhibit CCC is made partly by flexibility of the skirt as the result of the cooperation of the horizontal and vertical slots, it is made partly by the distortion of the skirt as a result of the extra expansion across the bosses, and it is made partly by the mechanical distortion of the skirt as the result of cylinder wall pressure. These factors are aided by the rather extensive relief around the boss portions at the top of the skirt. In so far as mode of operation is concerned, therefore, Exhibit CCC functions approximately the same as Jardine when one bearing face only of Jardine is slotted with a vertical slot. In so far as the bottom of the skirt is concerned, Defendants' Exhibit CCC functions the same as Jardine from the standpoint of flexibility, provided only one of the Jardine bearing faces is cut through; but in so far as oil distribu-

tion is concerned, it doesn't function the same as the bottom of the Jardine skirt. In so far as result is concerned, I would expect a similar result to Jardine with somewhat better oil-pumping characteristics; that is, lower oil consumption.

* * * * * * *

[fols. 201-202] Q. When you and your associates were trying to make the Ricardo piston operate successfully, as you have testified, did you or any of your associates in that work as far as you know, know of the Gulick patent or the Gulick piston?

A. I knew nothing about it and I never heard any of them mention it.

Q. Do you know of any metal of which internal combustion engine pistons are made or have been made which, employed in the construction of the piston illustrated in the drawings of the Gulick patent, would have webs that weren't flexible?

A. No.

Q. State whether or not it would be possible in your opinion to make a piston out of any metal employed for making internal combustion engine pistons and conforming to the drawings of the Gulick patent, without having flexible webs?

A. No, it would not be.

* * * * * * *

[fol. 203] Will you now take up the Franquist patent with the next patent in suit, if you have finished with the Gulick?

A. The Franquist construction is not like the Jardine construction and is not designed to function like the Jardine construction. The vertical ribs and grooves in the Franquist construction are not the equivalent of the vertical slots of the Jardine construction. In so far as mode of operation is concerned, there is a similarity, assuming something which is not shown in the Franquist assembly, that is, assuming that the wrist pin is mounted freely, the Franquist construction at the top of the skirt will operate in so far as mechanical distortion, somewhat similar to Jardine. The allowance, however, in the Franquist is not sufficient to take care of the expansion at the top of the skirt when aluminum alloy is used. He calls in his specification

for close fitting of the piston when the motor is cold, with the exception that there is .005 relief over the bosses extending to the top of the skirt and to a point somewhat below the bosses on the sections 14 in the Franquist drawing. [fol. 204-205] Assuming that those sections 14 occupied approximately half of the circumference, that would be equivalent to about .005 clearance at the top of the skirt. That clearance could only be made available after cylinder wall pressure had expanded the two bosses to a certain extent; so that from that standpoint the Franquist construction apparently would only function up to a total compensation for clearance of .005" on the average diameter of the piston, assuming a tight or snug fit when the motor is cold. That would not be sufficient in aluminum alloy, whereas the Jardine construction shows adequate compensation in that regard. But the piston would have no clearance at the bottom of the skirt, that is, the Franquist piston; therefore all of the expansion must be taken care of by the circumferential flexing, by the flexing of the ribs or grooves in the Franquist piston. To my mind that would not be possible with this construction, and hence the Franquist construction would fail to operate properly in a motor at all. So far as the result is concerned, Jardine obtains a result and Franquist does not.

* * * * * * *

[fols. 206-214] Q. You said that the engineers of the Aluminum Castings Company, including yourself and certain British engineers, were struggling to solve the problems solved by the patents in suit. Do you know whether anyone else was struggling with this problem during the time prior to the final solution of it by the patents in suit?

A. Yes.

Q. Will you name in a general way such as you know, were known to you to be working on this problem during that time?

A. This problem of taking care of the excess expansion of aluminum pistons was acute even in 1916 at the time I was working actively with the Aluminum Castings Company. Beginning in 1916 I personally had meetings and conferences with a good many automotive engineers in the United States who were working toward a solution of this problem. The problem was recognized throughout the

automotive industry. I recall meetings that I had with Col. Vincent, chief automotive engineer of Packard Motor Car Company, D. McCall White, chief automotive engineer of Cadillac, Mr. Ferguson, chief automotive engineer of Pierce-Arrow, and several others, during the period 1916 to 1919. From my own knowledge I can say that the automotive industry was alive to this problem and that the clearance problem was the one which needed solution most in order to make practical the utilization of aluminum alloy pistons in pleasure cars.

Q. Who was this Mr. Ferguson to whom you referred?

A. He was chief engineer of the Pierce-Arrow Motor Car Company.

Q. Now, you were asked during your cross-examination whether or not you knew the piston of the Franquist patent had been used commercially. Do you know whether or not any of the licensees of the Cleveland Trust Company have ever manufactured a piston like that shown in the Franquist patent?

A. Not that I know of.

Q. Has anyone to your knowledge manufactured it since the Franquist patent expired?

A. Not that I know of.

Q. You have stated that in your opinion the piston of the Franquist patent and that of the patents in suit operate differently. Is this opinion based upon any tests or observations you have made of the pistons themselves?

A. Yes, it is.

* * * * * * *

[fol. 215] Q. Now, those pistons that you heard of or that you tried out or that you dismissed, did they include the Stephen D. Hartog piston?

A. I don't know. I don't recall that piston.

Q. You don't recall it, then, by name?

A. No.

Q. Do you recall the piston shown in the United States patent 1,842,022?

A. I recall the drawing, is all. I don't recall having seen a piston like that.

Q. That isn't, then, one of the pistons that was tried out?

A. I have no knowledge that it was tried out, or that it wasn't.

* * * * * * *

[fol. 216] Q. It was not until 1920 that anything was produced of sufficient importance to enable its use successfully in a motor car, pleasure car?

A. It was about that time, according to my personal recollection that the Jardine solution was made, and that as I said before, was because it has proven worthy with reference to this particular phase of the aluminum piston problem.

Q. You are referring now to the efforts made by your company and not perhaps others?

A. No, I had in mind the efforts made by others as well. If a real solution of this problem had been found abroad, or outside of the Aluminum Castings Company, the chances are very great that we would have known about it in connection with our work and our activities. That is, what I may call a practical solution of the problem.

Q. Well, you know, don't you, or had reason to believe, that the Long piston was in use in the Franklin cars in 1919?

A. Well, I don't happen to recollect that, but if it is a fact I would still say the same as I just did; that is, the Long piston was really no solution of this problem.

Q. And you are familiar with the Long piston?

A. I am familiar with one type of what is known as the Long piston, yes.

Q. And that is the type that is in evidence here that is marked for identification as Defendants' Exhibit FFF?

A. Yes.

Mr. Richey: We make the same objections.

The Master: Same ruling.

Q. And you personally consider that that is not a solution of the problem?

A. That is correct.

Q. Why?

A. Well, in the first place the piston is in part double-walled; it is relatively heavy; it is expensive to cast and it requires a greater clearance on the thrust faces than the pistons now, the single-walled pistons that have solved this difficulty.

Q. Well, you know, don't you, that suit was filed against Mr. Long's company in Detroit on account of infringement of some of the patents in suit?

[fol. 217] Mr. Richey: I object to that. The record is the best evidence of that.

The Master: He may answer.

A. No, I have no knowledge on that.

Q. Your main objection really it is a double-walled construction?

A. Well, I don't think it is a practical solution of the problem, no.

Q. Have you ever met Mr. Long?

A. No, not that I recall, at least.

Q. Now, with reference to the Ricardo piston about which you have testified on cross-examination and on re-direct, have you any samples of that piston?

A. Not here. I think I could find a sample.

Q. You mean a sample of just one Ricardo construction, I mean as to details?

A. I don't know what samples might be available. There may be more than one.

Q. Well, you tried out various constructions, didn't you?

A. Tried out pistons for different motors.

Q. Were they all constructed the same as to details? I don't mean as to thickness but as to arrangement of webs?

A. No, I think not. I think there is a horizontal web in the drawing of the Ricardo patent that was left out, yes, C-3, in Ricardo United States patent 1,294,833, that was left out at least on one of the constructions as I recall it.

Q. Well, the webs C weren't made as heavy as shown in the patent in all of the constructions, were they, I mean relatively?

A. In the pistons made up under the direction of Mr. Parnell and Mr. Pomeroy and Mr. Halford, I think the sections were quite comparable to those shown in the Ricardo patent. There were some pistons made up later with thinner webs and also the Jardine construction was made, which has considerably thinner webs than those shown in the Ricardo patent. The web and head construction, however, was different in the Jardine pistons which were made in the permanent molds.

Q. A structure without the web C which you have referred to, is that illustrated in Fig. 2 of "The Automobile Engineer" of October, 1918, isn't that right?

Mr. Richey: I make the same objection. Is that alleged in the answer?

Mr. Bruninga: No, it is not set up in the answer. I am [fol. 218] trying to find out what this company did with the Ricardo pistons, about which he has testified so at length.

Mr. Richey: I object further on the ground that the publication is not set up in the answer.

The Master: Same ruling.

A. Yes, that is the type of construction to which I had reference.

Q. How about the construction shown in Fig. 4? Did you try that out also, Fig. 4 on the same page, page 274?

A. (After examining same.) No, I don't recall that that was tried out. That is for a very large bore piston, seven inches in diameter. We didn't test out anything as large as that.

Q. You didn't test out anything in which the webs weren't parallel but at an angle, as shown in Fig. 4?

A. Oh, I think we very likely tested structures where the webs were at an angle, but I didn't recall testing anything just as that construction. If it is the angularity of the webs you have in mind, I think perhaps we did test pistons with angular webs.

Mr. Bruninga: The magazine shown to the witness is marked for identification as Defendants' Exhibit 3-S.

Q. You say none of those pistons ever went into use?

A. In the United States?

Q. Yes.

A. Well, so far as I know they didn't.

Q. Did they go into use in Europe at all?

A. That is my understanding, that they did to a small extent.

Q. They are still used today in Europe, are they not?

A. Not according to my information.

Q. But they actually did go into commercial use, then, whether here or in Europe?

A. It was so reported, but I don't know of my own knowledge.

Q. Well, you met Mr. Harry F. Ricardo, didn't you?

A. No.

Q. Well, you know he is an eminent engineer, don't you?

A. Yes.

Q. You won't dispute his statement if he said it did go into wide use?

A. I don't know.

Mr. Richey: I object to that as immaterial, ask for hearsay, and further object to these questions regarding this piston as immaterial.

The Master: He has already answered.

A. (Continued.) I may say in that regard trunk type pistons went into use also. I have also testified that this [fol. 219] Ricardo type piston behaved in a motor a good deal like a trunk type piston. So that the fact that it may be used, is, I think, one which I would not dispute, at any rate it is a question as to how successfully it can be used.

Q. The double-walled type that you referred to just a little while ago as having been made by your company or brought out by your company, was that split in any way?

A. No, not in a vertical direction. The head, however, was separated from the skirt proper around the entire periphery of the piston.

Q. Where did that piston get too hot, at the top or at the bottom?

A. Which one?

Q. The piston that you have just talked about, the double-walled type?

A. Well, it got too hot particularly at the top of the skirt, but I presume that that whole piston was too hot for proper operation in the cast iron cylinder barrel.

Q. Now, you referred to Mr. Lawrence Pomeroy as one of the engineers that was sent over here. He was sent over here, or rather, he actually did something else but stand around; he worked on this thing, the Ricardo piston here, didn't he?

A. Yes, his advice was given to the Ricardo representative and also to the Aluminum Manufactures, Incorporated, or the Aluminum Castings Company.

Q. He contributed something to the Ricardo piston, didn't he?

A. Well, I don't know that he contributed anything; he worked on it. He tried out these Ricardo pistons in a motor that he was developing, and discarded them, and then he had a scheme of his own for compensating for the excessive expansion, as I remember it.

Q. What was his scheme?

A. He sought to make the webs flexible in the direction of the thrust, by a series of slots in the webs themselves.

Q. Like that shown in Pomeroy patent 1,499,073?

A. Yes.

Q. Was that tried out?

A. Yes, that was tried.

Q. And that was also a failure?

A. It was. Yes, it was not a satisfactory solution of the problem, at any rate.

Q. Didn't that take care of the expansion to some extent?

A. Yes, but it produced, as I recall it, a permanent set too easily in the flexed portion.

Q. Were those pistons that you tried out, Ricardo and Pomeroy pistons, made in permanent molds?

[fol. 220] A. Some were made in permanent molds and some were made in sand.

Q. The sand casting was no good whatsoever, was it?

A. Well, it didn't have the wearing qualities that we desired, but it was sufficient to test the expansion characteristics. The expansion of the sand casting is the same as that of a permanent mold casting when the two are heated to the same temperature, but you wouldn't expect even a half decent device in the sand mold.

Q. Because of your theory of the utility of casting in permanent molds?

A. Well, I wouldn't expect a salable device, I wouldn't have at that time, at any rate.

Q. And a construction like that shown in the Ricardo patent, 1,294,833, and as shown in the Pomeroy patent 1,499,073, was actually cast in permanent molds, then?

A. Yes, those were cast in permanent molds, that is, pistons of such construction.

Q. Didn't the overhanging slipper edges prevent you from withdrawing the outside mold part?

A. Yes, in that particular construction that is true. And also there was a problem at the head section, but that was taken care of by a couple of separate inserts which were taken out after the piston was removed.

Q. But both of those were actually cast in permanent molds?

A. Yes.

Q. Even when they had the overhang?

A. Well, the overhangs were eliminated in the permanent mold castings, but the direct connection of the head and webs was made possible by the use of inserts in the mold, as previously mentioned.

Q. Who suggested the elimination of the overhangs?

A. I have no idea.

Q. Do you know whether any of the British engineers suggested it?

A. I haven't any knowledge on that subject at all.

Q. Now, you said a number of expedients were tried out to make the Ricardo piston satisfactory. What expedients were they?

A. Well, I can't say from my own recollection now as to just all the things that were tried, but I do recall very clearly that the men whose names I have previously mentioned were trying in every way that they could to make this piston successful, and that I know involved the changes in actual clearance, that is, various means of fitting pistons, and I also know that the pistons when they came out of the motors, especially when the fitting was close or close enough [fol. 221] to avoid noise, had scoring on the bearing faces opposite the ends of the webs, and change of clearance in these portions, as I recall it, was tried to get away from that difficulty; but nothing that could be suggested by the British engineers or our own engineers was sufficient, or offered sufficient improvement to warrant the approval of the Ricardo piston.

Q. You mentioned Mr. Pomeroy as having suggested an expedient. What other than as shown in his patent did he suggest?

A. Well, Mr. Pomeroy's attempted solution of this problem with the Ricardo piston, as I recall it, came quite a bit later. That is, I think that the piston was put into discard, so to speak, before this suggestion of Mr. Pomeroy's, although I can't say positively as to that.

Q. Did Mr. Pomeroy suggest any other than that?

A. Well, not specifically as I recall it.

Q. Do you know of any expedient that Mr. Parnell suggested?

A. Not specific, no. I can't name the suggestions that any particular individual offered in this case.

Q. And that is true of Messrs. Blank, Wesley, Carpenter and Allyne?

A. Yes.

Q. How about yourself; you know what you suggested?

A. Yes, I know that I had nothing to suggest after hearing what the others had tried.

(Short recess taken.)

Q. I understood you to say, Dr. Jeffries, that these Ricardo pistons scored opposite the webs, is that right?

A. Yes.

Q. That is about on a line with the webs?

A. That is correct.

Q. Is that one of the purposes of Pomeroy's arrangement, to prevent that scoring?

A. Well, it was that and also to stop slapping. In other words, to try to make a Ricardo piston function in the motor so that it wouldn't stick or it wouldn't slap.

Q. Do you know who owns the Ricardo patent now?

A. Why, I don't know, but I suppose it belongs to the Cleveland Trust Company, in this trust.

Q. How about the Pomeroy patent?

Mr. Richey: We state that the Cleveland Trust Company doesn't own the Ricardo patent.

Mr. Bruninga: The Pomeroy patent is owned by the Cleveland Trust Company?

[fol. 222] Mr. McCoy: Yes, now. The Pomeroy patent 1,499,073.

Mr. Bruninga: Is that also true of the Hartog 1,842,022, previously referred to?

Mr. McCoy: Yes, that is owned by the Cleveland Trust Company.

Q. Can you explain why that scoring took place in the Ricardo patent and does not take place in the Jardine patent opposite the web; that is, I understand the surfaces of the slippers directly in line with the webs were the ones which were scored?

A. Yes, in general, or briefly, the Ricardo construction is a strong, rigid, nonflexible box-type structure, and when the webs heat up from the combustion of gases in the motor, they expand, and there is no place for the metal to go readily, except to materially increase the length of those webs, so as the length increases pressure against the cylinder barrel increases, eventually scoring results. Whereas in Jardine you have the structure made so that it will be flexible and you have slots so as to permit flexing.

Q. In other words in the Ricardo construction where there is no slot here, the outward pressure due to the expansion of the web, will cause the surface of the slipper to move right against the slipper and cause scoring; is that right?

A. Yes.

Q. And that is not true in the Jardine patent structure because these webs can flex down?

A. That is correct; that is, it is not so of the Jardine construction.

Q. That is the reason there is no scoring in Jardine and there is scoring in the Ricardo, because these webs can flex and move down?

A. Yes.

Q. And it is your opinion, then, in the Maynard patent that also takes place, that these webs can flex, and the part corresponding to the web 25 of Jardine being able to flex, the surface can move downwardly?

A. Yes.

The Master: Move inwardly?

The Witness: Move inwardly in Maynard's.

Q. And it is your opinion that is true even though the web may be a quarter of an inch long or as shown as, for instance shown in the Maynard patent, and as shown in Exhibits 1 and 17?

A. Yes, it is true of the construction of the Maynard patent. I mentioned, I think, the several factors contributing to the compensation for the excessive expansion in Maynard, of which flexibility is one, and a most important one.

[fol. 223] Q. And if the keystone relief on Exhibit 1, for instance, were filled in so as to fill the web, flexing would take place of that short little web now together, the same as in the Jardine patent?

A. Well, if there were no flexing in the web, there would be flexing in the skirt.

Q. But the flexing of the skirt itself would take care of any direct pressure due to elongation of the web irrespective of whether the web was flexible or not?

A. It might not.

Q. As a matter of fact it is necessary, therefore, to cut that relief in the pistons like Exhibits 1 and 17 to take care of that very condition?

A. Well, it is found desirable to do that.

Q. Well, it is done in every piston that is made like Exhibits 1 and 17 today?

A. I think so. I think that is the practice in most of the pistons today, at any rate.

Q. And the relief must be the greatest at the top and can decrease to practically zero at the bottom; isn't that right?

A. Well, the relief need not be greater at the top than at the bottom of the relief portion, but it is desirable to have as much bearing area as possible, and to gain any bearing area the wedge or keystone shape, as you have termed it, is desirable, with that web construction shown in Maynard.

Q. And it is your opinion, then, that Figs. 1 and 2 of the Maynard patent show this relief as in Exhibits 1 and 17?

A. They do not show the relief in just the same way as it is in Exhibits 1 and 17 but they do show the relief extending past the ends of the horizontal slots.

Q. As a matter of fact there is no relief, that is a depression, on the surface of the skirt at all in the Maynard patent as illustrated?

A. Not on the portion that is touching the cylinder wall, but there is relief of the general area around the boss.

* * * * * * *

[fol. 224] Q. Referring to the drawings that you produced, or, rather, the blueprints, Exhibits 21 and 22, and particularly 22, there is a distinct relief shown where appears the lettering "1/8 to 5/32" followed by "H" in a circle?

A. Yes.

[fol. 225] Q. And that is about the relief that you have on Exhibits 1 and 17, isn't that right?

A. Yes, that corresponds pretty closely to that relief. I think the relief is the same, however, from top to bottom of the relieved portion.

* * * * * * *

Q. You said that the Jardine piston was used or tried out, I don't know which, in the Templar car in Cleveland?

A. Yes.

Q. The aluminum Jardine piston?

A. Yes.

Q. Did it ever get into production?

A. I think not.

Q. The specific Jardine construction was then dropped after the Maynard construction came out, is that right?

A. Yes, to the best of my knowledge.

Q. Have you any Jardine structures, or structure, as shown in the patent, that you can produce?

[fol. 226] A. I think so, not here, but I think I can produce such a piston.

Q. Could you produce the Ricardo structure and the Jardine structure tomorrow afternoon?

A. Jardine and Ricardo.

Q. Those that were actually tried out, or something so we can see something in metal, see what it looks like?

A. I will try to.

Q. Now, one of the distinctions you made between the Jardine and the Ricardo piston was that the webs were thicker in the Ricardo piston and therefore gave a rigid structure as distinguished from a flexible structure; is that right?

A. Yes, I said that Ricardo was designed for rigidity whereas the Jardine construction aimed at flexibility.

Q. Even when the webs 3 of the patent which bridge the main webs corresponding to 25 of the Jardine patent are omitted?

A. Yes, that is still true.

Q. Now, those webs did not seriously interfere with rigidity, did they?

A. The Ricardo webs?

Q. Those webs C-3 referred to?

A. No, they wouldn't interfere with the rigidity. They would make the structure even more rigid.

Q. They wouldn't interfere with flexibility, if it was split, such a Ricardo piston was split as shown for instance at 30-30 on Fig. 8 of the Jardine patent?

A. Oh, they would militate against flexibility, yes.

Q. They wouldn't prevent flexibility?

A. They wouldn't prevent there being some flexibility.

Q. Wouldn't a structure, if it had those webs, be flexible enough for use?

A. I think not, not with the Ricardo sections.

Q. Well, if the webs themselves corresponding to 25-25 of the Jardine piston were made flexible enough, they wouldn't militate against flexibility?

A. Yes, if the Ricardo piston is made to the Jardine piston, and the slots put in, of course there would be the flexibility of the Jardine piston.

Q. In Plaintiffs' Exhibit 8 Ray-Day piston there are two good sized ribs on the inside, and those two together give

greater stiffness than any single web or rib C-3 of the Ricardo piston, it that right?

A. Well, I don't conceive that they would, because the Ray-Day piston has the skirt separated from the head around the whole circumference, and the skirt portion of the Ray-Day is in itself inherently quite flexible.

[fol. 227-228] Q. Isn't the skirt or around the slippers of Ricardo separated from the head all around?

A. Not in the sense that they are in the Ray-Day construction. But the Ricardo construction, if made even without the web, would be comparatively stiff, rigid, but even so it would have flexibility.

Q. You believe then that if the structure as shown in Fig. 2, page 274, of The Automobile Engineer, Exhibit 3-S, were split, that is split between the web, and with the parts of those dimensions, that there wouldn't be sufficient flexibility to do any good?

A. I wouldn't say that. I think the drawings shown there in Fig. 2, show somewhat smaller sections than are shown in the Ricardo patent, for one thing, and I suppose nothing short of a trial would demonstrate whether there is enough flexibility there or not.

Q. Well, you have given your opinions freely—I think you are capable of giving your opinions—you would say, wouldn't you, there would be inherent flexibility in those webs enough that if the slipper were split between the webs, those webs would flex sufficiently to have the slot close somewhat?

A. I think the construction shown in Fig. 2 of the publication which you have in your hand would show considerable flexibility if the vertical slots were put in the thrust faces.

Q. Those webs are also thin enough to flex, aren't they, as shown in that publication?

A. I think so.

Q. In other words, there is inherent flexibility in a structure like the Ricardo structure, as shown in that magazine, isn't there?

A. Yes, there was inherent flexibility in the old trunk type piston skirt, so there is inherent flexibility in the Ricardo construction with certain web thicknesses and certain skirt thicknesses.

Q. But Mr. Jardine particularly describes that the webs decrease in thickness toward the wrist pin bosses, isn't that right?

A. Yes, he did describe that as his construction.

Q. And that lends to greater flexibility?

A. Yes.

Q. Your conclusion, therefore, that the mode of operation was different and that the result was different as between Jardine and Ricardo is based upon the fact that there are no slots in the Ricardo piston?

A. Yes, if you take the case of what might be called a modified Ricardo, that is the essential difference in mode of operation.

* * * * * * *

[fol. 229] Q. And I believe you said—correct me if you haven't said so—that the length of the slot, 29*a*, of the Jardine patent, is a matter of degree?

A. Yes.

[fol. 230] Q. How much of a slot will you need in order to still perform the function?

A. Well, I must go back to say 1919 or 1920, according to my own recollection, and say at that time that no one could say how much of a slot would be needed, and I may say to-day that the proportioning of the slots and the sections and the reliefs are the result of a great deal of effort and a great amount of experience, and that different degrees of flexibility are required for different constructions, and different degrees of flexibility are required in different sizes of cylinders, and different degrees are required in the different specific designs of pistons.

Q. Would you say that a slot extending inwardly or a slot like 29*a* on the Jardine patent Fig. 4 extending inwardly, about as much as shown in Fig. 2, page 274 of Exhibit 3-S, is such a slot as contemplated by the Jardine patent?

A. Well, in view of the somewhat thicker sections of metal in these webs, in view of the cross-rib between the webs and on the inside of the piston head, and in view of the shortness of the horizontal slot to which you referred, I should say that that particular structure would lack the flexibility.

Q. You don't think that the web by which you probably mean the parts shown at X, which I will mark "X," can materially affect the flexibility, do you?

A. Yes, I think it does, especially at the top of the skirt. It would not materially affect the flexibility at the bottom of the skirt.

Q. You think it affects it more than like, for instance, the webs 27 and 27*a* of Jardine, Fig. 7. and the webs shown at the top of the piston in Fig. 2 of the Gulick patent?

A. Yes, I think the webs in the drawing to which you referred, ties the inside walls of the vertical webs together in the manner desired for a rigid structure.

Q. Isn't it a fact that as far as the Gulick view, for instance, is concerned, the parts above the wrist pin bosses are supposed to be rather stiff?

A. That is true to an extent of Figs. 1 and 2, but the construction shown in Figs. 5 and 6 is more flexible.

Q. Fig. 1 of Exhibit 3-S corresponds in general to the drawings of the Ricardo patent 1,294,833, does it not?

A. Yes, they correspond fairly closely.

Q. Would you say that the objects and advantages and purposes of the Jardine patent are secured if the slots 29 [fol. 231] were shortened to terminate about the inside part of the ring flange 23?

A. It would be quite difficult to secure successful operation under those conditions.

The Master: We will recess now until 1:30 tomorrow afternoon.

* * * * * * *

[fols. 232-243] Q. It is your position, then, that a structure like CCC, in which you have two horizontal slots below the ring lands and a relief opposite each wrist pin boss, causes this structure to embody the improvements of the Mooers patent, leaving out now the vertical slot?

A. Yes.

Q. It is also your position that as long as the vertical slot is provided, it incorporates the features of the Gulick patent?

A. Yes.

Q. And also of the Jardine patent?

A. Yes.

Q. You would consider the skirt part opposite the wrist pin bosses the equivalent of the webs in the Gulick structure?

A. In so far as the flexing function is concerned it is the equivalent. It is not as effective as the structure shown in Gulick, but it is the equivalent of it at least in part.

Q. And you also consider that those relieved parts, that is, the metal left by those relieved parts in CCC are the equivalent of the webs of the Jardine patent?

A. In function, yes.

Q. But not in structure at all?

A. Not exactly in structure, no.

* * * * * * *

[fol. 244] Q. Now, with reference to the Mooers patent, one of your distinctions over the Spillman & Mooers patent was that the Mooers patent structure was a single-walled body, as distinguished from a double-walled body. That is also the distinction between Jardine and Gulick as to that—that is one of the distinctions between Jardine and Gulick; isn't that right?

A. That is one distinction, yes, and especially one of the structures shown in Jardine.

Q. Now you also said another distinction between the Spillman & Mooers and the Mooers patent was that in the [fol. 245] Spillman & Mooers patent structure the relief was between the connections on which the wrist pin bosses are mounted and the skirt. That is also a distinction between Gulick and Jardine?

A. I think I said the relief in the Spillman & Mooers was hardly a relief. The hole is present there for the purpose of putting the wrist pin in place. It is not described, as I recall it, as a relief. But, even so, it would have in my opinion no function as a relief, the way it is constructed.

* * * * * * *

[fols. 246-255] Q. And it is your opinion, even if the Franquist patent is made out of cast iron, it will have no flexibility at all?

A. It will have insufficient flexibility to cause the piston to function substantially different from that of the trunk type piston, in my opinion.

Q. Is that due to the fact that the relief opposite the wrist pin bosses is insufficient?

A. No, that is only one of the factors. The other factor is the rigidity of the vertical groove sections, and still another is the horizontal separation being put in a ring groove so that the ring has an opportunity to transmit heat across the gap formed by the horizontal slot.

Q. You think, then, that is the wrong place to put the horizontal groove in the ring groove?

A. Not necessarily, it is according to what is desired of the horizontal groove.

Q. You wouldn't think that would be an impairment of function to put it in the ring groove rather than some place below?

A. It would if the function desired is the Mooers' function, that is, one of heat insulation; but it might not if the function is one of gaining flexibility, such as Gulick, Jardine and Maynard constructions.

Q. The Franquist patent states as to these grooves or slots, "Circumferential slots 17-17 are cut in the outer surface of the sleeve in the sections 15-15 respectively, while slots extend to and join the longitudinal slots of 13, separating the longitudinal sections 15 from the head of the piston." That don't specifically state the horizontal slot has to be at the bottom of the ring groove, and in fact we do not find anything in the patent that states they should be placed there except the illustration in the drawing?

A. (After examining patent.) No, I see no other reference to its construction in the specification.

• • • • • • •

[fols. 256-258] Q. Now, have you read the Ricardo article in this Exhibit 3-S, concerning which you were asked yesterday?

A. Yes.

Q. Now, as a result of your testing the Ricardo piston, what would you say as to the language of that article in general?

A. I would say that the article makes statements which are wrong and particularly extravagant with reference to the claims of the Ricardo piston, and perhaps misleading as to the value of the so-called crosshead type of piston referred to in the lat-er part of the article.

Q. Take the statement appearing down near the bottom of the third column of page 274, which is as follows: "Experience has shown that with these divided slippers the clearance necessary can be reduced to about one-half of that required for the ordinary type, and to little, if any, more than is required for a cast iron piston." Did you find from your test with this Ricardo piston that the statements made therein are correct or not?

A. They are wrong.

Q. Were the British engineers representing Mr. Ricardo present at the tests where you found that was wrong?

A. Yes.

Q. Were they able to make those Ricardo pistons operate, as stated there?

A. No.

Q. Have you now named all of the schemes that were tried out at the Aluminum Castings Company prior to the invention of the Jardine patent in suit in an effort to solve the problem that was solved by Jardine?

A. No.

* * * * * * *

[fol. 259] Q. Now, you were asked about this Hartog patent, 1,842,022. State whether or not that piston has ever been used commercially to your knowledge.

A. No, it has not, in my opinion.

Q. Is it, in your opinion, a commercially practical piston?

A. No, I think it is not.

Q. Will you give your reasons for so saying?

A. I think this Hartog piston is, among other things, entirely too flexible. It is designed to be put into a cylinder of smaller diameter than the skirt diameter itself, and the wrist pin supports in my opinion would be inadequate because the piston would be thrown from one side of the cylinder to the other by virtue of the high flexibility of the skirt. The piston has no rings and consequently it would not function properly from the standpoint of oil consumption, in my opinion.

Q. You were asked about this Exhibit 22, and particularly about the inclined relief shown at H. Can you tell from the drawing when that inclined relief was placed on the drawing?

A. Yes, it was put on, according to the data on the drawing itself, on the 21st of February, 1925, and the item refers to "Their wire 2-19-25."

Q. And when was the drawing dated?

A. The drawing is dated 9-1-23.

Q. Now, you testified that the pistons of Ricardo and Pomeroy patents were made in permanent molds with certain special inserts. Will you state whether or not that particular scheme you employed was commercial or whether you used it just for making experimental pistons?

A. We used it at the insistence of the Ricardo representatives that the piston construction should be as nearly as possible that described by Ricardo, especially with respect to the location of the boss-supporting webs. The pistons so made up were merely samples and were never put in production.

Q. During your cross-examination you were asked to and made a comparison of the Jardine and Ricardo pistons, in which you mentioned only the flexing of the skirt. Will you make a full comparison of these pistons in structure, [fol. 260] mode of operation, and results?

A. The Ricardo construction shown in the Ricardo patent 1,294,833 is intended to be operated as a non-flexing device, both as regards the skirt and the webs. The proportioning of the web sections and skirt sections, and the location of such sections in Jardine, co-operate with the horizontal and vertical slots to produce flexibility and compensation for excessive expansion both by flexing of the webs and flexing of the skirt. When the Jardine construction is heated, the boss portion will be expanded more than the portion at right angles to the bosses. Such expansion will tend to bring the edges of the skirt sections outward and would produce scoring if it were not for the flexibility of the webs and the vertical slots making possible the flexing of the webs to relieve this excess pressure. There is no possibility of such compensation in the Ricardo construction because of the rigidity of said construction and because of the absence of the vertical slots. The Ricardo construction is therefore not made to compensate for this extra clearance, whereas the Jardine construction is. In other words, the proportion of the sections in Jardine and the proper location of the sections co-operating with the horizontal and vertical slots, puts flexing life into the piston of Jardine which is absent in Ricardo. The modes of operation are therefore different, and the results are different.

Mr. Richey: That is all.

Recross-examination.

By Mr. Bruninga:

* * * * * * *

[fol. 261] Q. Even though it is connected along an entire chord; is that your idea?

A. Yes, I consider that that is a flexing structure, and a flexing feature on Exhibit 1 and also on the side of the Maynard piston, taking the maximum thrust, that is, opposite the side where the vertical slot is placed there is compensation for extra expansion by means of the Mooers principle.

Q. But the length of the webs, the length of these webs C of Ricardo, is about comparable to the length of the web in Exhibit 1 or 17?

A. I should say the length is somewhat more in the Ricardo construction, because the webs are disposed in the [fol. 262] Ricardo construction in such a manner as to hold the entire wrist pin very substantially within the outer diameter of the piston.

Q. Well, you say the connection of the webs C' to the piston is comparable with the length of the connection in Exhibits 1 and 17?

A. I should say the Ricardo web was somewhat longer.

Q. It is considerably shorter compared with the diameter of the piston, isn't it?

A. The web?

Q. Yes.

A. I think not.

Q. The connection of the webs at these points where they join the piston?

A. I should say at that point they are fairly comparable.

* * * * * * *

[fol. 263] Q. You said the Hartog patent is entirely too flexible. You then can make the webs and the skirt too flexible, can you?

A. Yes.

Q. You make it a particular point that Hartog has no piston rings at the top and therefore that is one of the disadvantages of the piston?

A. Oh, I should think the piston would be inoperable from that standpoint alone, if from no other.

Q. Now, Exhibit 22, as you read, bears the notation "Their wire." Do you know what that wire refers to?

A. Why, I imagine it refers to a wire from Willys-Overland Company to change the blue-print in a certain manner.

* * * * * * *

[fol. 264] Thereupon the Plaintiff called as a witness A. J. PERFLER, who, being first duly sworn, testified as follows:

Direct examination.

By Mr. Barton.

My name is A. J. Perfler, and I am Assistant Trust Officer of The Cleveland Trust Company, in Cleveland, Ohio. As Assistant Trust Officer of The Cleveland Trust Company my duties have to do with the administration of corporate trust estates, particularly patent estates. I am familiar with all the trusteeships of patents that are administered by The Cleveland Trust Company. There is but one trusteeship relating to automobile pistons held by The Cleveland Trust Company; it is called the L. P. Mooers piston patent estate and was created on March 7, 1922.

I am familiar with the relation of The Cleveland Trust Company to the patents in suit, identified as follows: Gulick patent 1,815,733; Jardine patent 1,763,523; Maynard patent 1,655,968; Schmiedeknecht patent 1,256,265; Mooers patent 1,402,309. These patents are included in the Mooers patent trusteeship administered by The Cleveland Trust Company. The Cleveland Trust Company has no other relation to the patents in suit except through its ownership of them under this trusteeship.

Plaintiff's Exhibit 26 is the original signed Conveyance, Declaration of Trust and Agreement between L. P. Mooers and George Pitts, and The Cleveland Trust Company, dated [fols. 265-270] March 7, 1922. That instrument, dated March 7, 1922, is now in effect and it sets forth the entire terms of the trusteeship under which The Cleveland Trust Company holds title to these patents in suit.

* * * * * * *

[fols. 271-273] Recross examination.

By Mr. Bruninga.

* * * * * * *

I will just list the names of the beneficiaries of the estate:

Bohn Aluminum & Brass Company, 1100 shares;
Aluminum Company of America, 1100 shares;

Packard Motor Car Company, 600 shares;
E. R. Alexander, 350 shares;
H. J. Hater, 50 shares;
Adolph Nelson, 712½ shares;
L. P. Mooers, 600 shares.

I understand Mr. Nelson owns patents on strut pistons; I couldn't identify the patent or piston. Mr. Mooers is the Mooers of the patent in suit 1,402,309. Mr. Alexander is one of the directors of The Cleveland Trust Company. Mr. Hater is treasurer of Aluminum Industries, Incorporated, which company is a piston manufacturer and a sub-licensee under the patents in suit.

Mr. Bruninga: That is all.

* * * * * * *

[fols. 274-288] Recross examination.

By Mr. Bruninga:

* * * * * * *

If you wish, you can say that the licensees, such as Bohn Company and Aluminum Company of America, get back some of the royalties they have paid; it is not a return to them as a licensee; it is a return to them as a beneficiary.

* * * * * * *

[fol. 289] Mr. Bruninga: That is all.

As I understand, counsel is willing to admit the authenticity of a copy of the bill of complaint in Equity 535, entitled The Cleveland Trust Company v. E. C. Long Piston Company and E. C. Long, filed in the United States District Court in and for the Eastern District of Michigan, and marked for identification Defendants' Exhibit 4-Z.

[fols. 290-342] Mr. McCoy: Are you willing to couple that up with the fact that the suit was dismissed because infringement ceased?

Mr. Bruninga: I am willing to couple it up with a stipulation that the suit was dismissed, but I don't happen to know why the suit was dismissed.

(Further remarks made by counsel, with no agreement reached.)

I will examine the witness on it if you don't want to admit the authenticity.

Mr. McCoy: Very well.

(Narrative continued, in answer to further questioning by Mr. Bruninga) That is my signature on the last page of Exhibit 4-Z. I knew that at that time suit was about to be filed against the E. C. Long Piston Company and E. C. Long, and I know that such a suit was filed. I executed that bill of complaint in that case. That bill of complaint included the Spillman & Mooers patent 1,092,870, the Vincent patent 1,279,184, the Church patent 1,327,147, and the Mooers patent 1,402,309. (Witness read bill to verify.) I have no reason to believe that is not a copy of the bill of complaint as filed.

Mr. Bruninga: I offer in evidence Defendants' Exhibit 4-Z.

(Narrative continued) I do not know what particular device Mr. Long and the Defendant, E. C. Long Piston Company, were making at that time which was alleged to be an infringement of the patent. I do not recognize Defendants' Exhibit FFF.

Mr. Bruninga: As I understand it, the plaintiff's counsel know that that statement is correct, that Long discontinued the use of pistons because he proceeded to purchase castings from licensees under the patent.

Mr. McCoy: No; that is not correct. I understood that the E. C. Long Company originally made piston castings for themselves, in addition to those they purchased from licensed sources, and when they ceased to make the castings for themselves and bought the castings from licensed sources, the bill of complaint was dismissed.

* * * * * * *

[fol. 343] DEFENDANTS' TESTIMONY

Mr. Bruninga: I offer in evidence the depositions of William M. Venner, Charles L. Chadwick, James V. Saxton, Charles F. Gilbert, Sidney D. Royalty, and Louis M. Stellman, as Defendants' Exhibit 3-Y. The exhibits attached have been offered in evidence. These depositions read as follows:

WILLIAM M. VENNER, a witness of lawful age, being duly produced, sworn and examined, testified in behalf of defendants, as follows:

Direct examination.

By Mr. Bruninga:

My name is William M. Venner. I am forty years old, and reside at 5631 Pershing Avenue, St. Louis, Missouri. I am employed as salesman by the Furnace Oil Corporation, selling Kendall motor oil.

I went through grammar school; had two years in high school and two years in the Syracuse Technical School, of Syracuse, New York, at night. After I left school I went to work for the H. H. Franklin Manufacturing Company, Syracuse, New York, in October, 1907. I was with the Franklin Company until December 30th, 1915. After I left them, I went to South Bend, Indiana, and with some other parties opened a Franklin agency on January 1st, 1916. I was in South Bend, Indiana, until May, 1920, when I came to St. Louis and took over the Franklin agency, with two other partners. I had the Franklin agency here a little over ten years, and after that we were still in the automobile business, up to December of last year, handling other makes of cars.

At the Franklin Company I started as a stock room boy and helper in the engine assembly. Then I got to be helper, assembling motors; then I got to be a full-fledged motor assembler, and then I worked in the repair shop part of [fol. 344] the time; worked in the test shed part of the time, testing, in the experimental room; had charge of the motor noise department; charge of the experimental laboratory, for a time, and then I was on the road, approximately, for three years, for the service, engineering the sales department.

I know Elmer C. Long, and first met him at the Franklin Factory, Syracuse, New York, the latter part of March, 1916. I was married on April 8th, 1916, and it was shortly before I was married that I saw him there. I came back from South Bend, Indiana, where I was located at that time, and was in Syracuse either two or three weeks before I was married. I met Mr. Long when I was going into the door, leading to the experimental room, and he was coming

out with Mr. Stellman. Mr. Stellman, I believe, had the title at that time of Assistant Chief Engineer of the Franklin factory. His first name is Louis; Louis M. Stellman, and that was at the Franklin factory, in Syracuse. I remember what happened at the first meeting with Mr. Long. He showed me a piston that Mr. Long had gotten up.

Mr. Richey: I object to the part of the answer that says "Mr. Long had gotten up," as being hearsay.

Mr. Bruninga: He showed you a piston, did he?

(Narrative continued) Yes, and I remember what kind of a piston it was. It was an aluminum piston, with six vertical slots in it. The two sections on the opposite sides from the wrist-pins were separated entirely from the head, and were supported from the wrist-pin bosses by two struts. I was familiar with the standard trunk pistons at that time and would describe it briefly as being about the only type of piston I had ever seen up to that time, that was any different than the regular piston which was in use; the skirt was an integral part of the head, without any slots or separation of any kind. This was not the Long piston, but pistons I had seen prior to the time I saw this Long piston.

You (Mr. Bruninga) asked me to prepare a drawing of the piston that I saw and you gave me a drawing of a standard trunk piston and asked me to show in what way the Long piston that I saw differentiated from the standard trunk piston. I have made such a drawing and here it is.

[fol. 345] Mr. Bruninga: The drawing is marked for identification "Defendants' Exhibit A."

The figures No. 1 and No. 2 of this drawing show the standard trunk piston, without any alteration. The figures Nos. 3, 4, 5, and 6 show the Long piston, that I said I saw in March, 1916.

Briefly describing that Long piston, and placing reference numerals on the drawing, designating the various parts, the letter a represents the head of the piston; the parts b represent the ring lands, ring grooves; the parts c represent the wrist-pin bosses; parts d represent four side skirts that are separated entirely from the head; parts e represent the struts holding those sides to the wrist-pin bosses. These struts, e, are not shown in Fig. 5 because

the boss is in the way there; they are in back of the boss. They could have been shown by a dotted line.

(Witness places dotted lines on drawing, as requested.)

The part, g, is a truss that was commonly used on lots of trunk pistons and standard trunk pistons at that time. The struts, e, were attached to the wrist-pin bosses as an integral part of the casting, and were attached to the part, d, in the same way. There were two struts in that piston; that is, there were two running from one side of the piston to the other. You might call it four, if you figure from the wrist-pin bosses.

The parts, h, on the drawing represent the slots. They went all the way through the skirt. Part i, represents a slot, and part j, also represents a slot, both of which go all the way through the skirt. The shaded part, k, represents an under-cut portion on the wrist-pin hole sides of the part that was fastened to the head of the piston. An under-cut part like this was found in a great many of the standard trunk pistons.

The standard trunk piston didn't require any bearing surfaces on that K side, and it was merely put there as a relief against expansion. The skirt in the Long piston was connected with the head on the wrist-pin sides, the wrist-pin hole sides.

I examined that Long piston in March 1916.

Q. State whether or not the piston that Mr. Long showed you, and that you saw in March, 1916, was constructed in the manner that you have described, with reference to "Defendants' Exhibit A."

[fol. 346] Mr. Richey: I object to that as leading.

A. Yes, sir.

(Narrative continued) When I first came to South Bend, Indiana, the piston then used in the Franklin automobile was made of aluminum, or of aluminum alloy, like Figs. 1 and 2, Exhibit A, but it had four slots in the skirt, extending up about three-quarters from the bottom, three-quarters away from the bottom, to the bottom of the ring land, and it had an oil groove cut all the way around from the top of the skirt to the bottom, about one-quarter of an inch apart; the lands being about a quarter of an inch apart. This pis-

ton was like the one shown me, which is marked "Defendants' Exhibit B." It had those slots, as shown in Exhibit B. The purpose of that hole just to one side of the slot was to enable you to put the cotter-pin in the wrist-pin lock screw and to remove it, also. At the time it was first installed the piston used was just like Exhibit B. Later, my men and myself, who were servicing these cars, used to saw the slots up closer to the ring land, groove the lower inside edge of the skirt, and put a steel expansion ring in there. The steel ring came from the factory. We put the steel rings in, in the latter part of 1916, or the early part of 1920—sometime between those dates. A piston of the character of Exhibit B, with a steel ring was used until the latter part of 1920. After that the Long type piston described in Figs. 3, 4, 5 and 6 (indicating) in Exhibit A was used. The Long type piston was furnished by the Service Department about April, 1920, and they were put in regular production about November, 1920. I can fix that date of April, 1920, when the Service Department put them in, because I got up the service bulletins we had with the exact dates on them. I recognize Service Department bulletin, sheet No. 262, composed of two sheets. It is a bulletin containing information of interest to dealers, and contains an article referring to the Long type piston.

Mr. Richey: I object to any interpretation of contents of this document, by the witness, as hearsay. As to anything it says, the document itself is the best evidence, if it is relied upon as a disclosure.

By Mr. Bruninga:

The two pages of Service Department Bulletin, sheet No. 262, are marked for identification as "Defendants' Exhibit C."

[fol. 347] The second page of this sheet bears the date of April 8, 1920. That sheet was received and read by me at that time.

Q. The second page of that sheet bears this notation: "Long Type Pistons. After April 15 the Service Department will be able to furnish Long Type Pistons in standard size. These are straight pistons with two or three thousandths clearance. Their weight is approximately the same as the standard pistons." Do you know whether the Serv-

ice Department furnished those pistons after that date; after that date of April 8, 1920?

By Mr. Richey: That question is objected to as leading.

A. Yes, sir, (continuing narrative) immediately after; as soon as you could get your order into the factory they were available. We obtained some because we were very hungry for pistons of that type, and ordered them immediately, because we had so much trouble with the one that was in production at that time—Exhibit B. The make-up of those Long pistons that we were furnished then were the same as this Exhibit A here, in 3, 4, 5 and 6.

Exhibit C, which you obtained from me is one of my possessions. I kept a binder full of those bulletins, and I took that from my original binder. It was one of the originals that I received.

These two sheets of paper Service Department Bulletin, sheet No. 289, marked as Defendants' Exhibit D were obtained from me, and have been in my possession ever since I received it.

Q. This sheet, Exhibit D, bears the date of November 11, 1920: Did you receive this sheet before or after that date?

By Mr. Richey: I object to that as leading, and as asking the witness to testify to the contents of a document, which, if its date is material, is the best evidence of itself.

A. I received it a day or two after that date, probably.

By Mr. Bruninga:

Q. This sheet contains the following sentence: "All motors going through production at this time are being fitted [fol. 348] with this new piston known as the Long Piston and a more quiet motor with slightly increased ability is the result." Can you tell me from your own recollection whether at that time, or thereafter, Franklin automobiles were received by you having a Long piston?

By Mr. Richey: I object to counsel testifying as to the contents of an alleged bulletin, and object to the question as leading and improper; that the recollection of the witness

has not been exhausted, and there is no occasion for producing the bulletin.

A. They were received by me about November, 1920.

By Mr. Bruninga:

Q. Can you fix the date at all, by the date of this Exhibit D, when the first pistons were received in Franklin automobiles, the Long pistons?

A. Yes, sir. May I look at this (indicating Exhibit D)?

By Mr. Richey: Let the record show that the witness examines the paper, marked for identification as "Defendants' Exhibit D."

A. They were in production at that time, at the time that bulletin was printed.

By Mr. Richey: I object to the answer, as it has not been shown that he was in a position to know when the pistons were put in production.

By Mr. Bruninga:

Q. How were you in a position to know when the pistons were put in production at that time?

A. Because we always received notification from the factory when the changes were made, and we could also tell by listening to the motor run, whether it had them in or not.

By Mr. Richey: The first part of the answer, based upon notification, is objected to as hearsay.

By Mr. Bruninga:

Q. Did you have occasion to tear down, or take down, any motor to examine whether they had Long pistons, at that time?

(Narrative continued) Yes, sir. Within a very few weeks after we received that bulletin we had one Long piston score, and had to remove it and replace it with another one. [fol. 349] That Franklin automobile had a Long type piston in it. There are so many things that we have to cause it, that is hard to say what caused the scoring. The other pistons were all right. This happened while I was in St. Louis. The construction of those Long pistons in the auto-

mobile we had to tear down, was the same as Exhibit A, Figs. 3, 4, 5 and 6.

(Mr. Bruninga places before witness three pistons, marked for identification as "Defendants' Exhibits E, F and G.")

I recognize all of these pistons. F is the same type of piston that Mr. Long showed me in 1916.

Q. Can you tell me whether or not it is the same construction?

By Mr. Richey: That is objected to as leading.

A. Well, that is what my answer to the previous question was intended to be, that it was of the same construction that he showed me at that time.

By Mr. Bruninga:

Q. Do you know whether it had the groove underneath the lowest ring land all the way around?

(Narrative continued) I don't think that it did. I think the groove merely extended to the portion that is fastened to the head, like that shown in Exhibit A, Figs. 3, 4, 5 and 6. I used some Long pistons in automobiles before April, 1920, which, as I said, is the date I received Exhibit C. I think I received some of them from Mr. E. C. Long, and I am positive the major portion of them from M. K. Weems of Quincy, Illinois. I am quite certain I received some from Long, himself, in 1918; no, that is wrong—it was in 1917, because it was while the Franklin were using the pistons marked Exhibit B, here. Exhibit B was used in Franklin cars up to 1920. We received the first cars, with Exhibit B pistons in them, approximately in November, 1916, and shortly after that time, due to the amount of trouble we had with them, I started buying the Long pistons. I knew where to get them because I had already seen them at the factory, in 1916, and I don't know how the information came to me. Mr. Long was a Franklin dealer at that time, and I presume that is how I knew where to get them. I knew he was a [fol. 350] Franklin dealer, at that time, because, being on the road for the Company, I had a list of all the dealers.

The construction of the first Long pistons, that were furnished by Mr. Long, was practically identical with Exhibit F (indicating piston). It differentiated from it in that the little groove didn't extend into the portion fastening the wrist-pin bosses in the head. This is the groove in Exhibit F, which is just below the ring land, and it ran like in Exhibit A, Figs. 3, 4, 5 and 6. The first pistons were sand cast and had one rib on the inside of the head. I bought several dozen pistons from Long, before the Service Department began to furnish the Long piston. I bought some while I was still in South Bend, and they were constructed like "Defendants' Exhibit F." After I came to St. Louis I bought some pistons, and they were like Exhibit G, die cast. These were bought from the Franklin factory and from M. K. Weems, of Quincy. The Franklin factory was putting out pistons like Exhibit E, then. Exhibit D is also a piston the Franklin factory furnished.

(Here ensued colloquy among counsel concerning the identification of pistons indicated by the witness.)

(Witness' narrative continued) The proper answer to those questions is that Exhibit G was purchased from the Franklin factory, and Exhibit E from M. K. Weems, of Quincy.

By Mr. Richey (to the witness): You do not mean those identical pistons; you mean pistons like those?

By the Witness: The same construction.

By Mr. Bruninga:

Q. Did the first pistons that you bought from the Franklin factory have the oil holes and the groove just above the number 32313, in Exhibit G?

By Mr. Richey: That is objected to as leading.

A. No, sir.

By Mr. Bruninga:

Q. Do you know whether those grooves and oil holes were ever in the Franklin pistons?

A. They were in the later ones.

[fol. 351] By Mr. Richey (to the witness): He asked whether you know. You can say yes or no. I object to the answer as volunteering something.

(Narrative continued) I do not know the number of pistons, of the construction of Exhibit E, that were purchased from Weems, but there were dozens of them, during 1920, 1921, 1922. I bought a considerable number from Weems, while I was in St. Louis, and started buying from Weems immediately after I came to St. Louis, pistons like Exhibit E. I stopped handling the Franklin, in St. Louis, during the year 1929; I don't recall the month. In 1930 we ceased to handle the Franklin, and I gave up the agency. The Franklin automobile as furnished to dealers, particularly myself, continued to use the Long piston from about November, 1920, until about the early part of 1928. Then they used the Invar strut piston. I don't know what company furnished the Invar strut piston. During the time I used them, the Long pistons gave excellent service; much better than anything we ever had before. With the pistons, B, there was probably slapping when you received the automobile from the factory. With the Long piston, you seldom got a slap in that until you had from thirty to thirty-five thousand miles. This I know from experience, and it was true with the first Long pistons I obtained. Back in 1917, 1918, 1919 and 1920, I knew of no other piston that would give that service.

No piston was ever offered to me by the Aluminum Company of America, that would give that service, during those years. I never tested any pistons bought from the Aluminum Company of America, during the years 1917, 1918, 1919, 1920 and 1921.

No pistons were offered me by the Cleveland Trust Company of Cleveland, during the years 1917, 1918, 1919, 1920 and 1921. I have never heard of Edward J. Gulick, of Elkhart, Indiana. Elkhart is eighteen miles from South Bend. Mr. Gulick never offered me any pistons.

During the years 1917, 1918, 1919, 1920, 1921 and 1922, there was a great demand for a piston that would perform the service that the Long piston did, but I did not find anybody except Long that furnished it.

This bulletin, Franklin Service Bulletin No. 348, which is marked for identification as "Defendants' Exhibit H," which I previously gave you, was received by me in the mail,

from the Franklin factory. It has been in my possession since April, 1922.

[fol. 352] This bulletin, Franklin Service Bulletin No. 369, dated February 20, 1923, two sheets, marked for identification as "Defendants' Exhibit I," which I also previously gave you, has been in my possession since February, 1923. The Franklin Company was furnishing pistons of the construction shown in the first page of bulletin, Exhibit I, at the time I received this bulletin.

Mr. Bruninga: I offer in evidence "Defendants' Exhibits A, B, C, D, E, F, G, H and I."

By Mr. Richey: We object to the alleged bulletins, Exhibits C, D, H, and I, as incompetent and immaterial; and object to the statements therein as hearsay.

(Narrative continued) I am acquainted with George J. Oitsch, Patent Attorney, of South Bend, Indiana, and had business with him in April, 1920, while I was still in South Bend. He applied for a patent for me, on a split skirt piston.

Q. I hand you a certified copy of petition, specification, oath and drawing, as originally filed, in the matter of a forfeited and abandoned application of William M. Venner, filed April 12, 1920, Serial Number 373,340, marked for identification as "Defendants' Exhibit J"; Will you examine it and state if you are the Venner named in that application?

By Mr. Richey: That is objected to as immaterial and as not related to any defense in the answer. I do not think it has been set up in the answer.

By Mr. Bruninga: Mr. Richey, you will find a defense in the answer, as far as that matter is concerned.

By Mr. Richey: Which one of the defenses is it?

By Mr. Bruninga: Two of the defenses are enumerated in paragraphs 40 and 41 of the answer.

(Last previous question read to the witness.)

(Narrative continued) Yes, I am the Venner named, and I filed the application. I recognize the sheet you have handed me, containing three views, in pencil, and containing on the back the word "piston" (marked for identification as "Defendants' Exhibit K"), as a drawing of the

piston that I filed the application for a patent on. The sketch was one I made on February 16, 1920, the date noted thereon. I made some pistons constructed as illustrated in Exhibits J and K before February 16, 1920, the date [fol. 353] noted on the sketch, Exhibit K. The patterns were made by the Peerless Pattern Company, of South Bend, Indiana, and the castings were made in Cleveland, by the Aluminum Company of America, before the date of Exhibit K. When I received the castings I machined up about fifteen of them and put some of them in Franklin automobiles, at South Bend. After they were machined up, their construction was just like Exhibits J and K, and they were given a trial for several thousand miles of use. Their operation was fairly satisfactory. I didn't have any particular trouble with them, but in the first ones the webs extending from the head hole to the skirt portion were too light. I did nothing to remedy that, and in some of them the webs would collapse slightly. The web was between three-sixteenths and a quarter of an inch in thickness, made of lynite, an aluminum alloy.

That was the material that the Aluminum Company of America made the pistons out of. I specified in my order that they would be made out of Lynite, an aluminum alloy. The pistons were made in Cleveland, Ohio. I did not go any further with the piston because at the time I got it up I thought it would be better than the Long type, but it was not any better, so I just quit. I thought the Long was really better than what I had. The purpose of splitting the skirt of Exhibit B was to allow for the inherent expansion of the aluminum. This was not necessary with cast iron pistons, but it is necessary to split the skirt in an aluminum piston because the aluminum expands approximately three times as much as cast iron does, under heat. I knew this in 1916, and I also knew when that splitting would accomplish that, in the aluminum skirt. From my experience in this art, if I had any particular piston out of cast iron, and I wanted to make it out of aluminum, I would slot the skirt in order to have it function in a cylinder without sticking. I would say it was an obvious thing to do. I was familiar with piston rings in 1916, and they were split at that time. If I were given a piston of aluminum I would split it immediately under the head and down the sides, if it were possible to do it with the particular casting, and between the wrist-pin bearing.

"Defendants' Exhibit L," dated September 22, 1920, is a copy of a letter I received from George J. Oltsch, and I have a distinct recollection of receiving the original of that letter. I do not know where the original is now. I was in St. Louis when I received it.

[fol. 354] By Mr. Bruninga: I offer in evidence "Defendants' Exhibits J, K and L."

By Mr. Richey: I object to all of them as not relating to any defense set up in the answer, and as immaterial as far as the Gulick patent is concerned, because they were subsequent to his filing date.

I object to the letter as incompetent, and to the statements in the letter as hearsay, and not sworn to, and the author is not produced for cross examination; further, the letter is not properly identified.

Cross-examination.

By Mr. Richey:

Aluminum or aluminum alloy is also lighter than iron—a couple of times lighter; it is also a better conductor of heat than iron, and conducts heat away from the explosion chamber faster than iron. I knew, a good many years prior to 1920, that aluminum possessed these properties, and that aluminum expanded about three times as fast as iron.

The Franklin car has always been an air-cooled car, and though I can't give you the exact date, since the Holmes car ceased to be in existence it has been the only air-cooled car in the country, and that has been a great many years. By "air-cooled" I mean the motor is air-cooled as distinguished from water-cooled.

Cast iron pistons had been used in the Franklin car before they adopted aluminum pistons. The main reason they changed from cast iron to aluminum pistons was because it cooled the motor better; the motor cooled better with the aluminum pistons; also, for the extreme light weight of them. It was desirable because an air-cooled motor naturally ran much hotter than the water-cooled. It was desirable to conduct the heat away more rapidly because we had trouble at times with the iron pistons scoring from the heat. That scoring did not take place until after the en-

gine had been heated, because, with the iron piston they became so hot that it was impossible to lubricate them at high temperatures. It was possible to lubricate the aluminum pistons at the higher temperature because the motor ran much cooler with them in there. It did not reach the high temperature as it did with the iron. We didn't have any great amount of this trouble. The aluminum piston was not put in there entirely on account of heat. The Franklin Company had been having this trouble with the iron pistons before they adopted the aluminum piston, for about two or three years.

[fol. 355] Another reason for adopting the aluminum piston in place of the iron piston was to obtain lightness of reciprocating parts; to reduce vibration and quicken acceleration. There were no other reasons that I know of for substituting the aluminum piston for the iron piston. This Exhibit B was the first aluminum piston that was adopted by the Franklin Company, to my knowledge.

I don't know from actual experience whether or not some of the other companies tried to use trunk type aluminum pistons.

I did not see a trunk type aluminum piston as far back as at the time I saw the Long piston. I never saw any in the Marmon cars in the early days.

This Exhibit B piston succeeded the cast iron piston in the Franklin car, but I don't think the first few of them had those four slots in. I think they were in the solid skirt. They used this "trunk type" piston, with the solid skirt, only a very short time, then they went to this Exhibit B. They made this change so that they could fit the skirt a little closer, and it would not stick. They didn't have any trouble with the trunk type aluminum piston sticking in the cylinder, but they had trouble with them slapping.

When the first Exhibit B pistons were used, they did not have this ring on the inside, that I spoke of. They were used without that ring for a few months. The ones with the slot still slapped and we put the ring in to squeeze them out, so they would have more flexibility. They were used just a few months with the rings in, then they changed to the Long type. That change was made because the Long type piston was so constructed that they could be fitted very close and they wouldn't seize when they were hot.

We had no trouble with Exhibit B because of the ring seizing, but we had trouble with them slapping.

I believe other automobile manufacturers besides Franklin Company used pistons like Exhibits E, F, and G after 1920, but I don't recall who they were. I don't know of my own knowledge.

The Invar strut piston was substituted for the Long piston in about 1928. That Invar strut piston was a piston that had a slot extending from the bottom ring land to the bottom edge of the skirt of the piston, on one side of it, and there are two steel struts mounted in practically the same position as the Long piston, extending from side to side. [fol. 356] That is all I remember about it, with the exception that there was a skirt slotted underneath the bottom ring groove, on both sides, underneath the head. There was only one slot running the full length of the skirt. I have seen a large number of those pistons between 1928 and the present time.

I saw more pistons like Exhibits F and G, between 1920 and 1928, than I have seen of the Invar strut.

I have attended sales conventions, at Syracuse, where the Franklin dealers assembled. I don't recall of attending any sales conventions at Syracuse while I was in South Bend; I did some, at Chicago, that they would have at show time there, and I attended some at Syracuse during the time I have been in St. Louis. I don't think I ever attended any other kind of conventions or meetings at Syracuse, while I was at South Bend. I attended probably five or six while I was at St. Louis. I think the date of the earliest one was about 1923.

I frequently went to Syracuse on visits, sometimes twice a month, and sometimes two or three months apart, while I was at South Bend and also while I was at St. Louis. When we were in South Bend we used to drive back most of our cars, and I went to the plant at Syracuse a lot for that purpose; and, it was my home and my folks' home, so I visited there while I was there. I don't believe I was ever in Syracuse that I didn't go up to the Franklin plant. These visits to the Franklin plant have extended from 1916 to date. I was there just a few weeks ago.

I was at the Franklin plant in Syracuse last September and Mr. Caster was just packing his tools up to leave; he had been laid off; in fact, they closed the whole drafting room. I don't know whether he is back again, or not. There was considerable activity there in the drafting room

two weeks ago, when I was there. I didn't go in; I just stuck my nose in the door. I knew Mr. Caster there over a period of years. I also knew Mr. Marks; he is still there. I have known him ever since he went there to work, whenever that was. I don't know just how long ago that was; a good many years ago.

The first actual work I did when I went to the Franklin factory was drilling holes in little quarter-inch cap screws —I beg your pardon— that was not the first work I did; I helped to assemble motors very shortly after I went there. I would say that was around 1909, or the early part of 1909. I helped to assemble motors, I think, not over six months; [fol. 357] then I was head assembler, with a helper of my own. I worked at that a couple of years; that carried me up to about 1911; I don't remember the exact month. I am pretty certain that it was around 1911, because I left there for six months and went to work for the Fiat Company, in 1911, and went back. I left the Franklin Company in March or April to go to the Fiat Company, and it was somewhere between four or six months later than I came back. I was several months with the Fiat Company in Poughkeepsie, N. Y.

I assembled motors after I came back to the Franklin plant, and I continued in that work for the remainder of the year. I next was inspector, for a few months, of the engine assembly. Then I took charge of the motor noise test department; that was about the first part of 1912; and I continued in that department until somewhere along in August of 1912. Then I went to work for the engineering department, in the experimental laboratory. I stayed there until the early part of 1913. I don't remember what month of 1913; I could tell from records I have. My next job was to go on the road for the Service Department in the early part of 1913. I was mixed up with that job—I did a little work for the engineering department and the sales department for practically the next three years, returning to the factory occasionally, for possibly a month or two.

Mr. Stellman was present when I had that conversation with Mr. Long about this piston. No one else was present. Mr. Stellman was then employed at the Franklin plant. I usually saw him on these trips that I made to the Franklin plant. He had been my superior there. I always considered him a good friend, and always went to see him every time I was there.

I made this drawing, Exhibit A, this morning. I made it in the next room to Mr. Bruninga's office—in his library at his request.

I started about ten o'clock this morning to make Exhibit A, and completed it twenty or thirty minutes later. I used no drawing instruments and my only equipment was a pen I found laying in the desk, about two inches long, and I used my own pencil and a ruler I found laying there. I brought no equipment with me for making it. At the time I made it I assumed that it might be used in connection with my testimony. I had seen similar pistons like Exhibits E, F and G, elsewhere, prior to the time when Mr. Bruninga asked me to make this drawing. The first time I saw these [fol. 358] pistons, E, F and G was when he laid them on the desk there, this afternoon.

The drawing, Exhibit A, is very similar to the drawing of this piston, Exhibit F—practically the same. Except that it is a sand cast instead of a die cast, this Exhibit F was the standard piston of the Franklin Company for a good many years, and I saw it from year to year, between 1920 and 1928.

The conversation with Mr. Long, when Mr. Stellman was present, took place at the Franklin factory, right outside of the door leading into the experimental room, inside the yard. I had a conversation with Mr. Bruninga about my testimony here, several months ago. I didn't know that I would be called as a witness at that time. Mr. Bruninga told me a couple of days ago that I would be called as a witness, and I had a discussion with him at that time, but not about what I was going to testify to. He asked me a lot of questions and I believe he wrote down the answers. I believe it was this morning that he mentioned that I might be interviewed by Mr. McCoy or by you, (Richey) or by somebody representing the other side. He told me to tell you that I would be glad to answer any question for you, on the witness-stand, if one of you interviewed me. He did not tell me not to answer any questions that you might ask me prior to the time I got on the witness-stand—he said just what I said before—that if you asked any questions, to tell you I would give the answers when I got on the witness-stand. Neither Mr. Long nor Mr. Fletcher ever asked me to testify in any other causes regarding this Long piston. I don't know for how long a period Mr. Long was a Franklin dealer—he was a Franklin dealer a good many

years ago. I believe I first knew that Long was a Franklin dealer when I went on the road for the Company, because I had the list of all the dealers, and still have it. I do not know how long he continued to be a Franklin dealer. I did not know him prior to 1916, and never saw him in Quincy—in fact, I never did travel that particular town. Nobody ever asked me to testify in any other cause regarding these pistons, except in this one. I was never told that any other causes existed regarding these pistons, excepting this one.

The bulletins I have been asked about were kept among my personal records. There were a whole stack of them, several inches high. I brought only a few of that whole stack here—four of them. I produced only four because [fol. 359] I picked out the ones that I could find, that referred to this particular piston here. I picked out those four because Mr. Bruninga asked me—I mentioned the fact that it was mentioned in service bulletins, and he asked me if I had any, and I said I would try and find them, which I did.

On November 11, 1920, it was well known that aluminum alloy had distinct advantages as a material for pistons, because it was light in weight and its great ability to throw off heat over cast iron. It was also known at that time that one of the disadvantages to the use of aluminum alloy for pistons was the clearance which was necessary between the pistons and the walls of the cylinders. And at that time it was known that that was due to the fact that the aluminum expands more rapidly than the cast iron. The excessive clearance that was necessary, particularly with the cold motor, had a tendency to make it noisy, to say nothing of affording an opportunity for the escape of gasoline past the rings and into the base, and also allowing an excess amount of oil to work up past the rings; that is correct. That was all known in November, 1920, and prior thereto. This Long type of piston, like those I have been talking about, according to their bulletin there had not proven satisfactory in production, by the Franklin Automobile Company, on April 8th, 1920. To my own knowledge, I don't know anything about it.

There was a time that the Franklin Automobile Company used an oval type piston. That was around 1922, I believe. They used only a very few of them, and to the best of my recollection, it was ground so that the skirt was much smaller in diameter on the wrist-pin hole sides. There was

a very small bearing on the opposite side of the wrist pin hole, and it had a sawed slot underneath the bottom ring land, on both sides. I saw some of those pistons, but I don't believe I saw over two or three dozen of them. I believe around April, 1922, they went through production, in small quantities. The results they obtained were so bad that they went back to Long. I dispute the statement in Bulletin H, April 18, 1922, Exhibit H, reading: "A piston which is ground oval in shape and for this reason known as the oval type piston has been going through production in small quantities since last summer. The results being obtained with this piston are so successful that it may be adopted for standard productions." They may have been [fol. 360] of the opinion at the time that it was true, but it didn't work out that way. According to my experience, it is not a true statement. I don't see why the experience of the people who prepared this bulletin, Exhibit H, would be any different than ours. It may have been a true opinion on their part, but I don't think it was a correct one. I know from the experience that we had with them in cars, that they were not satisfactory. I don't know whether the statement is true or not. I don't know why they were experimenting with this oval type piston down at the Franklin factory.

Piston slap is a noise caused by the striking of the piston wall against the cylinder wall, and a ping is the detonation of the gasoline in the combustion chamber.

The instructions contained in this Exhibit I, Franklin Service Bulletin, dated February 20, 1923, which shows cuts, relate to the piston illustrated on the initial page and at the top of the second page.

I will bring with me tomorrow the balance of these bulletins, from which I selected these four that have been offered in evidence here.

When one of the first Long pistons that we used scored, we substituted another one for it, in St. Louis. It had been in the cylinder a very short time—a few weeks— before we made the substitution. We found, upon removing the first piston, that there was a tearing of the metal and on the two faces that bore on the cylinder wall, on the thrust faces, which was due to its rubbing against the iron cylinder. That piston came in the first Franklin car that was received by us equipped with Long pistons. That car ran seven or eight hundred miles before it scored. That was in the early

part of December, 1920, I believe. I don't remember where the substitute piston came from, because we probably had pistons from Franklin and from Weems in stock at that time.

We first dealt with E. C. Long for the Long pistons, and then I think it was M. K. Weems. I don't think we had any correspondence with them, other than sending them an order and receiving a bill for it. In fact, I think they were sent C.O.D. at that time. I think the only think I did was to write them a letter and tell them to send me so and so. I don't remember whether they sent a bill, or sent it C.O.D.

We bought several dozen pistons from Weems. That would probably be a dozen shipments or more. I don't [fol. 361] remember whether they were sent C.O.D., or were the regular transaction. We would probably have records of the transaction at that time. Those records are destroyed. The company has been out of business a good many years. I kept these bulletins because they were of value to me and the other records were not. I kept the bulletins but I didn't keep the other records. I cannot say whether any one of these shipments were C.O.D. or on a regular transaction. I don't remember exactly how many shipments there were. I don't remember when the last shipment was received; that was a good many years ago. I ordered them so many different places; sometimes from the factory, and sometimes from Weems, and I don't remember which was which. I don't remember when we ordered or received the last shipment from Weems; that is not too far back to remember, but I just don't remember; I had no occasion to try to remember it.

The Franklin Company did not, to my knowledge, try out any other pistons than the oval type pistons and the Invar strut piston, between the time the so-called Long piston was adopted by them, and the time it was abandoned.

I was in South Bend, Indiana when I made this sketch, Exhibit K; I don't remember whether I made it at the office or at home. I had a model before me when I made that drawing, because the one I made previous to that I had the patterns made from. I made that one for the patent attorney to apply for the patent with. I turned it over to my patent attorney the early part of April, 1920, or it might have been a little sooner than that. I don't recall the exact date. To be more exact, I imagine it was probably the early part of March when I took it up to him. It must have been

some time between the time I made it and the time he filed those papers. I have no recollection, independent of these dates on the sketch and the application, when I did deliver it to him. I not only fix it by those dates, but I can also fix it by the fact that it was shortly prior to the time I came to St. Louis.

I said those castings were made by the Aluminum Company of America, but it might have been the Aluminum Castings Company; it was the company that made Lynite, the people who have the trade name Lynite. I don't remember the name. It was not the Aluminum Manufacturers, Inc., and it was not the U. S. Aluminum Company.

[fol. 362] We had correspondence with the company that made our castings, about those castings. I don't think they made blueprints or drawings of the castings—I sent them the molds which we had made by The Peerless Pattern Company, South Bend, Indiana; I should not have said the molds, I meant the patterns. I presume the company in Cleveland, that made the pistons, made the molds.

I don't recall exactly how much we paid them for the castings, but I believe it was around $2.95 apiece, and that included the molds; they were charging for the finished product that they turned over to me. I think I bought about two dozen castings from them, two or two and one-half dozen. I imagine I paid them from seventy-two dollars to one hundred dollars. My recollection of the price is not accurate. I don't remember how much I paid them; it seems to me that it was sixty or seventy dollars, although I don't recall.

The purpose of my piston was not to accomplish the same thing as the Long piston; I thought I had an improvement on his, but I found out I didn't. I was undertaking to improve upon the Long piston. I thought that by suspending those independent skirts from the head, that the expansion would take place downward, but I found out I was mistaken about it. I wanted the expansion to take place downward so as to obtain less expansion than there was in Long, so that I could fit them much closer. I read over this application, Exhibit J, between the time my attorney prepared it and the time I filed it.

It is true that, as stated in this abandoned application of mine, Exhibit J, one of my objects was as follows: "The invention relates to pistons and has for its object to provide a piston especially adapted for use in air-cooled

internal combustion engines, and to provide a piston so constructed, that the use of aluminum and other light metals may be accomplished, thereby giving lightness of reciprocating parts, which metals have a greater relative degree of expansibility than the cylinder casings under the same temperature." That is what I understood the Long piston did. When this application was filed, I was stating to the Patent Office that the purpose of my invention was to do what I understood the Long piston already did, but a little bit better. This statement does not say "a little bit better," but it may further down; I don't know.

[fol. 363] Q. This says, "The invention relates to pistons and has for its object to provide" this thing that you knew at that time the Long piston was doing?

A. Yes, sir.

Q. Still you were representing to the Patent Office that that was the object of your invention?

A. Yes.

Q. The same thing that you say you already knew the Long piston did?

A. Yes, sir.

(Narrative continued) I don't know who, on behalf of the Cleveland Company, corresponded with me with respect to these castings, which I said I had made. I don't remember the names of anybody. They wrote me one letter telling me that they would like to hear the results that I obtained, and also mentioned the fact that if it proved out satisfactory, that they might be interested in it; to send them some information about it, or something to that effect. I did not write to them afterwards; I never answered that letter, and never got any more pistons.

(Thereupon, the further taking of the deposition was adjourned until April 28, 1932, at ten o'clock A.M.)

(Met pursuant to adjournment as above, on April 28, 1932, at ten o'clock A.M.)

Cross-examination.

By Mr. Richey (Continued):

XQ. 249. Referring to "Defendants' Exhibit J," your forfeited and abandoned application for your patent, page 3, beginning at line 15, reads as follows: "Pistons of this

character in the past, on account of their greater expansibility than the cylinders in which they are used have been found, when subjected to extreme temperature, to bind or seize the bore of the cylinders, and where sufficient clearance has been allowed in the skirt of the piston, under low temperatures, the piston slaps." That was a true statement at the time it was made, was it not?

A. I didn't write those myself, but I guess I signed it on the end, didn't I?

XQ. 250. You said yesterday that you read it over and signed it?

A. Yes, sir.

XQ. 251. The statement I read in the first question this morning, was true?

A. It was the true opinion at that time.

XQ. 252. Was it not true in fact?

A. I don't know whether it was or not.

[fol. 364] XQ. 253. It is not a statement of opinion; it is a statement of fact. In the question I read, that was a true statement of fact at that time, was it not?

A. It was my opinion that it was, yes.

XQ. 254. It was your experience, too, that it was true, wasn't it?

A. Yes, to some extent.

XQ. 255. Well, how do you want to modify it, if it is incorrect?

A. The Long piston, when you allowed three to three and one-half thousandths clearance didn't do the things it said in there; however, with smaller clearance, it did.

(Narrative continued) This statement I made applied to the Long piston, under certain conditions. When that statement was made, I knew about the Long piston.

XQ. 258. And still you did not modify the statement to except the Long piston?

A. It doesn't say, in that, all pistons; it says pistons of this character, doesn't it?

XQ. 259. Yes, but by "pistons of this character" you meant of the character shown in the application, did you not?

A. Aluminum pistons as a whole, I presume.

(Narrative continued) The Long piston was an aluminum piston. When I made that statement there, I claimed

to have had the Long piston and the others that were used, in mind, and to have known about it. I did not except the Long piston, in the statement, because I thought that one would run with much closer clearance than Long. I intended to include the Long piston in that statement at the time I made it.

The clearance allowed for the Long piston was from three to three and one-half thousandths.

The advantage of having a narrow clearance between the cylinder and the piston, is that there is apt to be less oil pumping; it allows the ring face to stay flat against the cylinder wall. It will give greater ring life and longer life between replacements. The disadvantage of the oil pumping is that it uses oil and fouls spark plugs and causes frequent valve grinding, and carbon accumulation. It pumps oil into the combustion chamber. The disadvantage of the effect on the piston rings of the large clearance, is that it allows them to rock and become sort of circular on the face, instead of flat. It would probably wear the edges of the piston ring grooves faster and, in addition to that, cause a slap.

Referring to the Invar strut piston, which I spoke of yesterday, the clearance on that, as I recall, is three and [fol. 365] one-quarter to four thousandths. The clearance there was about the same as the Long piston. The Invar strut piston was used in other engines besides the Franklin engines; in a great many other automobiles. I do not know that it was fitted to less clearance with other automobiles, than three and one-half to four thousandths.

XQ. 277. There was also an aluminum piston known as the split skirt piston, that had no Invar strut in it, that was used quite generally prior to the Invar strut, was there not?

A. Well, the only one that I saw, the split didn't extend clear to the top of the skirt. There was a little hole drilled in, and it extended almost to the top. I believe the piston was made by the Aluminum Company of America.

(Narrative continued) I am familiar with the split skirt piston that had a recess at the boss and webs across—that is the one I am referring to. Those pistons were quite generally used, beginning about 1924 or 1925, and I believe they are still in use, though I am not sure.

I was married on April 8th, 1916, and left Syracuse on a wedding trip right after the wedding. I spent the first night

in Buffalo; the second night in Williamsport, Pennsylvania; the third and fourth nights in Chicago, and the next day in South Bend—about five days in all. I was in Syracuse two weeks, I believe, or a little over two weeks before I was married. That is, I went down and stayed two weeks before I was married, and then spent five days on my wedding trip.

I said I made this drawing, Exhibit A, yesterday, here in this office. I drew those red lines in there, not the whole thing, just the red ones. Yesterday, when you asked me if I made this drawing, I didn't intend to say that I made the whole drawing—I didn't make the whole drawing. It is not a drawing; it is a photostatic copy. Mr. Bruninga gave that photostat to me; everything in black, except these reference numerals, was on here when I started on it, and when he handed it to me. I put the letters and shaded portion on there, and the little dotted section of the web, shown on Fig. 5; that is all I did. Yesterday, when you asked me about it, I did not make that distinction. It would be quite obvious to you that I didn't make the photostat.

I don't know how much there was to that application, Exhibit J.

After I got here in St. Louis I decided not to proceed with this application; in fact, I believe it was just about [fol. 366] the time I left South Bend, in May, 1920. At that time I learned that the Long piston was a good piston.

I never instructed my attorney not to proceed with the application; I just ignored his letters.

Mr. Richey: I should like it to appear that there was an amendment filed in this application, by the attorney, November 26, 1920, which was responsive to the Office action of September 20, 1920, and that that is the one that was referred to in Exhibit L; and further, that there was an interference letter of February 15, 1921, sent to the attorney, and under the practice, one would also have been sent to Mr. Venner.

(Narrative continued) I would say that I received those first Long pistons from M. K. Weems, Quincy, Illinois, during the middle of 1920; however, I am not certain about it. It was not many months after the Series 9-A came out.

The pistons illustrated in my application, Exhibit J, were not any better than Long's. It is correct that the tests were

made before the date of this sketch, Exhibit K, which is February 16, 1920.

XQ. 311. Then, why did you file your application on April 12, 1920, if the tests had already shown you that the pistons were not as good as Long's?

A. The tests were not completed at that time; they were in cars, running, but I didn't discover it until there was some considerable mileage on it.

(Narrative continued) It is correct that I did not complete these tests until after the application was filed. I did have them in cars before February 16, 1920. The first one I put in just one, just one piston. It was very satisfactory. Then I put in, I believe, a couple of sets more, or a full set, I don't recall which, and those were in the car at the time the application was filed. I did say yesterday that I made some of the tests before February 16, 1920; they were partially made. One of the tests was completed before that date, but the other was not. The first test was of but one piston.

I believe this Series 9-A car came out in November of 1916.

There was an advertising campaign about the first part of 1920, trying to stimulate a demand for cast iron pistons. I believe the use of such pistons in Franklin cars was dis- [fol. 367] couraged by the Franklin Company. The purpose of these special design pistons was to reduce the weight of an iron piston.

Redirect examination.

By Mr. Bruninga:

RD. 1. Referring to "Defendants' Exhibit A": What do Figs. 1 and 2 illustrate?

Mr. Richey: We object to that; he has already testified about that.

A. It illustrates the old style plain trunk piston.

By Mr. Bruninga:

RD. 2. Yesterday, Mr. Richey intimated that these figures might have been made from a Franklin piston; do you know whether they were?

A. This drawing, Exhibit A?

RD. 3. Yes; the drawing that was handed to you.

A. No. That piston, a piston like that, was never used in a Franklin.

Mr. Richey: That is, like shown in Exhibit A?

Mr. Bruninga: That is, like shown in Exhibit A.

The Witness: In all the details, yes.

RD. 4. What do you mean, Figs. 1 and 2, or the rest?

A. One and two.

(Narrative continued) My attention has been called to page 149 of The Gasoline Automobile, its Design and Construction, Volume 1, The Gasoline Motor, by P. M. Heldt, Editor of the Horseless Age Co., 250 West 54th Street, New York, 1915. Comparing that piston, illustrated on page 149, with Figs. 1 and 2, so far as general structure is concerned, I would say it was identical, with the exception that the one on page 149 has four ring grooves, and Figs. 1 and 2, on Exhibit A, have three ring grooves. Figures 3, 4, 5 and 6, as I have drawn them, are distinguished from that particular piston on page 149, of the book, in that the piston on page 149 is a solid skirt piston, the skirt being an integral part of the head. Figs. 3, 4, 5 and 6 show the skirt as being in six sections, four of which are supported by webs from the wrist-pin boss, and being otherwise entirely independent of the head. In other words, Exhibit A was furnished me as a photostat without any red lines or lettering on it, and I added those red lines and also the shading at k, to that piston; also the dotted section, e, on Fig. 5.

[fol. 368] R. D. 9. And is that the way the Long piston 1916 differentiated from an ordinary trunk piston?

Mr. Richey: I object to the question as not being justified by the record.

A. Yes, sir.

Mr. Bruninga: It is stipulated that the book, "Gasoline Automobile, Volume 1," examined by the witness, was published in 1915, and that a photostat of the drawing on that page may be introduced in evidence with the same force and effect as if the original book were produced.

I offer in evidence the photostat, as "Defendants' Exhibit M."

Mr. Richey: I object to it as immaterial.

Mr. Bruninga:

R. D. 10. Mr. Richey asked you with reference to cast iron pistons used by Franklin, during the first part of 1920: Do you remember how those pistons were constructed?

A. They didn't use any cast iron, in 1920.

R. D. 11. In what year did they use cast iron?

A. 1916, was the last year.

Mr. Bruninga: Mr. Richey referred to a digest of the proceedings in the Venner Application, Serial No. 373,340, which I handed to him, this digest being of official actions and proceedings following the filing of the application. I offer in evidence that digest, as "Defendants' Exhibit J-1," together with the original of the official letter of February 15, 1921, and the notice of allowance, dated January 16, 1922.

Mr. Richey: In view of the offer, I withdraw the statement I made about the character of these papers, and suggest that this exhibit be attached to Exhibit J, since they both constitute a part of the same proceedings.

(Narrative continued) Greater expansion takes place in the pistons of an air-cooled motor, as distinguished from those which are water-cooled, up to recent series Franklin, which are much better cooled. By "recent series" I mean from 1930 on.

R. D. 14. Would you say that a piston which operated satisfactorily in a Franklin air-cooled engine, had a good test?

[fol. 369] Mr. Richey: I object to that as incompetent, being merely the opinion of the witness.

A. Yes, sir.

(Narrative continued) From experience with both air-cooled and water-cooled engines, I would say that the test of a piston in an air-cooled engine is much more rigid.

There was a piston used prior to this Exhibit B here, without the slots in the skirt. It was fitted thirteen thousandths under the bottom ring land; eight thousandths

at the bottom of the skirt. Piston B was fitted, I believe, eleven thousandths under the bottom ring land, and five thousandths at the bottom of the skirt. The piston used prior to this Exhibit B was a straight trunk aluminum piston, without the split skirt.

The Long pistons were fitted about three thousandths in 1920, the full length of the skirt.

As to the manner in which you and I got in contact, Mr. Sutherland of your (indicating Mr. Bruninga) office, called on me last year sometime, and said that he had been down to the Franklin dealer, and that the man in the stock room told him that I could probably give him some information about it, as he knew that I was familiar with pistons as used in Franklin trades. Sometime later you called me and asked me to come down to your office, which I did. You asked me if I knew anything about the Long piston that the Franklin used, and I said yes, that I had met Mr. Long the first time he ever came to the Franklin factory with this split skirt piston——

Mr. Richey: I object to this conversation as incompetent.

Mr. Bruninga:

RD. 24. Did I ask you for facts, or did I tell you what I wanted you to testify to?

A. You asked for facts, and intimated that I didn't know what I was talking about.

RD. 25. Did I give you just a cursory examination or a rigid examination?

Mr. Richey: I object to this whole line of testimony as incompetent and immaterial.

A. A rather rigid examination.

RD. 26. Were you coached at all by me, what to testify to?

A. No, sir.

[fol. 370] (Narrative continued) The cause of the scoring of pistons is not always the piston construction. Lack of oil and extreme heat can cause it.

In the 1920 Franklin automobiles, the oil was furnished by a pressure system—the pressure feed in the main bearing, through the crank-shaft, and connecting rods, and then thrown up on the cylinder wall. It fed to each in-

dividual main bearing, then to each connecting rod, and the throw-off of the connecting rod bearings lubricated the piston and cylinder. In other words, there were separate pipes to each bearing. These pipes lead from a distributor type oil pump, in the bottom of the oil tank case, and was distributed to the various conduits. There was liability of clogging of these conduits, which happened occasionally.

The castings which I testified were made of my pistons, in accordance with the application Serial No. 373,340, were sand cast.

I don't know whether I discussed the Long piston or not with Mr. Oltsch before I filed my application.

RD. 38. At the time that you filed this application, had you found the Long piston not practical?

Mr. Richey: I object to that question as incompetent.

A. No.

RD. 39. Have you ever seen a perfect aluminum piston?

A. No, sir.

RD. 40. Referring to the statement on page 2, of "Defendants' Exhibit J," reading as follows: "Pistons of aluminum and alloys on account of their relative greater degrees of expansibility than the cylinder casings, tend to seize the cylinders under high temperature, unless considerable clearance is provided and too much clearance is impracticable." Does that refer only to the Long piston?

Mr. Richey: The question is objected to as leading.

A. No, sir; that referred to the pistons that didn't have a slotted skirt.

RD. 41. Did you so understand it, as referring to that?

A. Yes, sir.

Mr. Bruninga: That is all.

[fol. 371] Recross-examination.

By Mr. Richey:

The Franklin piston known as the straight skirt piston was the Long type. The 9-B series was the succeeding model, of the 9-A, and was started about 1918. It was used until 1922.

Regarding the journal called "Manual for Trouble Shooters Franklin Automobile Company": The article on

pages 8 and 9, on piston slap, dated November 1, 1923, Series 9 and 10 cars is correct, with the exception that they didn't fit that straight skirt piston with as much clearance as they state there. It was nearer three and a half to four thousandths, than it was five. It is stated here to be five. May I ask when the book was published? November 1, 1923? Then I withdraw the statement I made regarding the clearance—that was correct at that particular time.

They commenced fitting these Long pistons with five thousandths clearance when they increased the compression ratio to such an extent that there was a great deal more heat generated, in 1922. They continued to fit them with five thousandths clearance for about a year, then they dropped back to a lower clearance, because they put in a different cooling system.

This same article gives the clearance at the bottom of the skirt of an oval piston, as three thousandths. I believe that was correct for the clearance for those pistons, at that time.

Mr. Bruninga: The book produced by Mr. Richey is marked for identification as "Defendants' Exhibit N."

(Narrative continued) The clearances given here, for the three types of pistons—tapered, straight and oval—were correct at that time. The article deals with piston slap and contains instructions how to detect it and how to cure it. Its statement, "Slaps are due to the clearance allowed between the piston and the cylinder walls," is correct. The statement "Aluminum pistons expand more than cast iron or steel ones, and since this extra expansion requires more clearance, they are more apt to slap," is not, generally speaking, correct. The piston marked "straight," on page 9 of this book referred to, was a Long type piston, like Exhibits E, F and G.

Mr. Richey: That is all.

Mr. Bruninga: Deposition closed.

[fol. 372] Mr. Bruninga: I want to offer in evidence "Defendants' Exhibit N."

Mr. Richey: That is objected to, as it is all immaterial, except the part on pages 8 and 9, that are entitled "Piston Slap." The balance of the book refers to other features, steering, position, and things of that kind, not involved in this case.

CHARLES L. CHADWICK, a witness of lawful age, being duly produced, sworn and examined, testified in behalf of defendants, as follows:

Direct examination.

By Mr. Bruninga:

My name is Charles L. Chadwick, and I reside in Quincy, Illinois. I am in the machinery business, operating now under the name of Tri-Point Corporation. Formerly we operated under the name The Weems Machine Company, and later, Weems-Chadwick Industries.

I am a tool maker by trade and have made lots of patterns. I also have had experience in automobile repairing. I started to work at the machinist trade for my father, at the age of fourteen, and was with my father for a number of years; and from there, to H. M. Sheer Company of Quincy, where I worked for some four or five years. I was foreman of their shop, and devoted most of my time to tool making. The Sheer Company's line of business was incubator supplies.

Then I left there and worked for the Wabash Railroad Company for several months; then went back with the H. M. Sheer Company; left the H. M. Sheer Company and came to St. Louis and worked for the A. Wister Company; then back to Quincy, in business for myself, for a little while—the machine business; and then went with the H. M. Sheer Company again; and from there to Mr. E. C. Long, in December, 1918.

When I was in the machine business myself, we did a good deal of automobile repair work, in connection with our machine shop. We serviced cars, and placed in new pistons. At that time, most of the pistons that we replaced in cars, we had to make ourselves. That was back between the years of 1910 and 1912. I, myself, made a number of pistons, but most of those were cast iron pistons. I had had very little experience with aluminum pistons before I came to Mr. Long, in December, 1918. Somewhere around the time of 1914, there was an aluminum in- [fol. 373] stalled—I think, in a Haynes car. That was the first aluminum piston that I had seen in an automobile. I made an aluminum piston myself in experimenting, but owing to the poor casting, I never even put it

into a car. That was a piston near the standard solid type piston, only it had a little bead on the inside of the skirt, I cut a slot through that bead, or ridge, to take up the expansion. That piston never was installed in a car; I never kept any record or anything of it. That was around '14; somewhere around there. I couldn't tell you any date, but it was before I went back with the H. M. Sheer Company. It was while I was in business myself. We had our shop on Main—or, on Seventh, between Main and Jersey, in Quincy, Illinois.

I have no way of fixing the date that I came to Mr. Long, further than memory. There was a little misunderstanding in regards to salaries, when I went with Mr. Sheer, and so I notified him on the first of December that my resignation would take place the first of January. Mr. Sheer was a man that was easy to upset, and he told me I could quit whenever I got ready. I was working for him on Armistice Day.

Just before the Armistice, Mr. Sheer and I came to an agreement as to an increase in salary, which he was to pay me outside of my regular weekly check, and after the Armistice was signed, I did not receive this extra amount. That was the reason that I left his employ when I did. After Armistice Day, he said that he thought he could be able to get someone to take my place, as the War was over and the boys would all be coming home. I stayed on about two weeks, as near as I remember, in order to finish up some things that I had started, before I left. I went to Mr. Long in the latter part of December; I couldn't mention the date, but I am positive it was before Christmas.

Mr. Long's place was located on Eleventh and Main Streets, Quincy, Illinois. I had had some previous negotiation with him about a job. He came to me sometime in August, and wanted me to go to work for him, but I didn't leave Mr. Sheer at the time. Before I left Mr. Sheer I talked to Mr. Long, and he told me any time I wanted to leave there, why, just to come out and go to work. I quit H. M. Sheer Company on Saturday night and Monday morning I went to work for Mr. Long.

I started as foreman of Mr. Long's shop, and was employed from December, 1918, until November the first, 1919, [fol. 374] when Mr. Long sold his business to Mr. M. K. Weems. Mr. Weems died in July, 1930. I stayed in that

shop, after Long sold out, and am there yet, in the same shop. After Mr. Weems died, I purchased the business from the Weems estate, personally. It is operated now as a company, as the Tri-Point Corporation. It is a corporation now. The Company owns the business now, but I bought it personally from Mr. M. K. Weems. Then, in March, 1931, I consolidated with the Tri-Point Corporation. It is operated under the Tri-Point Corporation, now.

There were pistons being manufactured by Mr. Long at the time Weems took over the business—a piston with a slotted skirt; aluminum type, aluminum piston. It originated from an ordinary trunk piston, by putting a rib across from the wrist-pin boss to the side wall of the piston. By putting the ribs across from the wrist-pin boss to the side wall of the piston, it could be slotted with six slots. That was the kind of piston that was being manufactured by Long when Weems took it over, on November 1, 1919.

Mr Long was making some of those pistons when I went to work for him, in December, 1918. And, as I previously testified, that they were distinguished or differentiated from an ordinary trunk piston by the fact that they had webs and slots in them.

Q. 54. I gave you yesterday a photostat of an ordinary trunk piston and asked you to change it or add to it, in order to produce a piston that you saw when you first came to Mr. Long; can you produce that drawing? Have you made such a drawing?

A. Yes, sir (producing drawing). I have this drawing here, which is nothing but an ordinary trunk piston (referring to Figs. 1 and 2).

(Narrative continued) No. 1 shows the one with the wrist-pin. No. 2 shows the piston turned in an opposite way, looking through the wrist-pin hole. No. 3 shows the piston by having slots, two slots, on the side, looking through the wrist-pin hole. No. 4 shows the piston on the opposite side. The line shows three slots. No. 5 shows the interior of the piston, and the red line indicates the rib that is added to the wrist-pin boss and connected with the side wall of the piston. That is to hold those two walls in position after the piston is slotted. No. 6 shows the rib across the other way.

[fol. 375] Mr. Bruninga: The drawing produced by the witness is marked for identification, "Defendants' Exhibit O."

(Narrative continued) I put the red lines on the drawing, Exhibit O. Figs. 1 and 2 are views of a standard trunk piston. To my knowledge, such trunk pistons have been in existence ever since I knew of a gasoline engine—back in 1909. It had the cross-web, a, in it at that time. Of course, all iron pistons do not have that. Some pistons are heavy enough to carry that strain, without putting that in. In order to lighten the piston you put a rib on the top of the piston. And those trunk pistons had the wrist-pin bosses, b, and had the ring groove, c,—some had two and some had three grooves.

On Figs. 5 and 6, the parts, d, is an added rib, extending from the inside of the piston wall to the wrist-pin boss. Those were in the Long piston I saw when I came to Mr. Long. They were cast pistons. The side walls and this rib was practically one piece after the casting was made. The part e, in Figs. 3, 4 and 5, indicates the small groove that was cut around under the lower ring land to separate this side wall of the piston from the head. It went clear through the skirt, all the way around. Not opposite the wrist-pin bosses—there is a little reinforcement there to take care of that over the wrist-pin boss; otherwise, the piston will fall through—. The parts, f, in Figs. 4 and 5 was a slot extending from the lower end of the piston to this groove that was cut all the way around the piston. That went all the way through the skirt. There were six of those slots in the piston.

The parts, g, are slots that were cut between the rib that was cast on the inside of the piston, and the wrist-pin boss, and went all the way through the skirt. There were four of those slots like the g, and two like the f, making six slots. In Fig. 6, which is a cross-section showing the same general view as Fig. 3, I have a slot marked "Y": that is in Fig. 6, but it is not in Fig. 3; that should not be in there. That was a mistake on my part.

Figs. 3, 4, 5 and 6, illustrate the piston that I saw at Mr. Long's when I came there in December, 1918. I would say that piston was being made at that time, by Mr. Long, out of aluminum alloy. They were made from sand cast-

ings. Some of the castings came from Walker M. Levett Company, New York City, when I came with Long, in [fol. 376] December, 1918. Others were made in St. Louis, Gilbert Foundry Company. A wooden pattern, wooden core box, was being used for making that kind of piston. The pattern itself did not differentiate from an ordinary trunk piston; the difference was all in the core box. The core box differentiated from those used in ordinary trunk pistons, just by putting in the small piece, that made this rib from the side wall of the piston to the wrist-pin boss. I could produce a core box of the kind that was being used at that time.

(Witness produces core box which is marked for identification as "Defendants' Exhibit P.")

This core box was among the patterns that Mr. Weems bought from Mr. Long. I had seen it before Mr. Weems bought it from Mr. Long. The entire core box is as it was originally—there has nothing been added. The two pieces you indicate were lost out of it, and we just made them in St. Louis yesterday, under my directions, and put them back.

Taking that core box, Exhibit P, as it stands, without those recesses on the side, which receive the lugs on the two pieces, the core box is just the same as an ordinary core box for an ordinary trunk piston.

Mr. Bruninga: I will mark the two pieces as P-1 and P-2.

(Narrative continued) P-1 and P-2 are the two ribs that extend from the side wall of the piston to the wrist-pin boss. And when in place, they make holes for the ribs.

The procedure followed by the core maker in making a core box like Exhibit P, using the two pieces in place, is as follows: The core maker prepares his sand; he removes these two ribs, P-1 and P-2, and fills this box with sand up to the position where these ribs set in. He puts those into their position, and when he is finished, fills this box with sand. Then it is swept off at the top and makes a perfect tray, in which he lays an iron plate. He turns the complete core box over with the plate, leaving the sand on the plate. Then he gently pulls this rib, P-1 and P-2, outside the box, which leaves an opening for the metal to go in where it enters the hole. Yes, after the core has been made, with the pieces, P-1 and P-2, in place,

the core box is turned upside down with the metal plate, and these pieces come out of the core box with the core. [fol. 377] That leaves an opening in the core for the metal to run in, and become a part of the wrist-pin boss.

The core maker uses different things to make the sand stick—such as alloy, paste, molasses; a mixture. This particular core box will make only half a core, and in order to make an entire core, the core maker takes two of these halves and places them together in a perfect circle. After it is made, the core is put in an oven and baked, then the two baked parts are glued together, and that makes the complete core.

Q. 113. I understand you to say that you saw such a core box as Exhibit P, at Mr. Long's place of business when you came there?

Mr. Richey: That is objected to as leading.

A. Yes, sir.

(Narrative continued) I have had no actual experience as a molder or core maker, further than my pattern making and machinery and tool designing would go.

The thickened part in the core, between the wrist-pin boss and the top of the head, and the two thickened parts on each side of the web are reinforcement there to strengthen that where the skirt is cut clear off from the head. The core boxes like Exhibit P, that I saw at Mr. Long's when I came there in December, 1918, had pieces very similar to P-1 and P-2. That was the first time I had seen that box. As near as I can guess, the two pieces we have here were no different from the ones in the old core box—it is just the same as this is. The groove on the side of the core box, below the part that takes these lugs of the piece P-2, is merely to hold the ribs P-1 and P-2 in position.

The reason the core box has the name "Levett Co." on it is because Mr. Levett put his name on all of the—in all of our core boxes that we shipped to them—just to identify his own castings. Walker M. Levett Company was a foundry, in New York City, and we shipped patterns to that Company. We shipped those patterns to him and he made the castings according to the patterns that we shipped him.

(Pistons Exhibits B, E, F and G are placed before the witness.)

This Exhibit B here: I recognize that as the piston used by the Franklin Company, before they used the piston Ex-
[fol. 378] hibit F, which was made and patented by Mr. Long, known as Series 9.

This Exhibit E is a Series 9 Franklin piston, made from dies owned by Mr. M. K. Weems, and these castings were also made by Walker & Levett Company.

Exhibit G is a Franklin piston, also known as the Series 10. This casting evidently came from the Franklin factory, or from Mr. Long.

Mr. Richey: The last part of the answer is objected to as argumentative and incompetent.

Mr. Bruninga:

Q. 125. Is Exhibit G a piston made by Weems?
A. We make the same identical piston as this Exhibit G.

(Narrative continued) Weems makes Series 10 pistons of the same dimensions, practically the same design, only the slots opposite the wrist-pin boss run at an angle, like those in Exhibit E.

Referring to the kind of a mold that the piston Exhibit F was made in, it was made in a wood pattern and in a wood core box. The designation F.1.B., inside, was a factory mark that we put in our pistons to identify it further than the Franklin piston; to be used for factory convenience only. It was a Series 9, Franklin piston.

Q. 131. Is that particular piston, Exhibit F, any different from the one that you saw at Mr. Long's in December, 1918?

Mr. Richey: I object to that as leading.
Mr. Bruninga: Do you want me to ask him whether it is the same?
Mr. Richey: No, you should have asked him in the beginning to compare it with the piston, but now you have led him, and of course you will get the answer that you want.

(Narrative continued) There is practically no difference between the pistons.

Q. 132. Were any pistons being made at Mr. Long's place, when you came there in December, 1918, like Exhibit F?

Mr. Richey: That is objected to as leading.

(Narrative continued) Yes, sir, they were being made and put in some cars, and there was a number of them sent out for trial, to different places. I couldn't recall [fol. 379] just where they went to. I wouldn't say I know of any of these pistons, like Exhibit F, being made at the time that I came with Mr. Long in December, 1918. It is pretty hard to go back at that time, to be exact, to the exact design. I started working on pistons right away after I came to Mr. Long. We made an aluminum piston for Franklin cars and some for the Northway Motors. The design was practically the same as Exhibit F. Of course, they were made according to the sizes and lengths and so on, according to the factory's blue-prints.

Regarding the construction of the pistons I worked on, when I came to Mr. Long in 1918, some of them had the two ribs cast with the wrist-pin boss on one side, and not on the other side. That would allow the piston to be slotted on one side, practically the same as this one is, and no slot on the other side.

I don't know how long the wrist-pin bosses have been relieved as in Exhibit F, but it has been done ever since I knew anything about gasoline engines. That relief is put in there to keep the piston from scoring. The piston expands more than the wrist-pin does, in the line of the wrist-pin, than it does the other way. Naturally, if the pistons fit close, they are apt to score the cylinder. That was true of the ordinary trunk piston.

Mr. Richey: You mean iron pistons?
By the witness: Yes, sir.

(Narrative continued) That was done in trunk pistons, before I came to Long. My experience with automobiles and gasoline engines runs back to about 1909, and during that time I have worked on a good many engines and in most cases they were relieved on the side.

In Exhibit F, the groove or slot below the lowest ring land runs all the way around the piston; this was done for the convenience of machining. It was not necessary, so far as the piston structure was concerned, but it was easier to cut this groove all the way around, than it was to saw those side walls loose from the head. The purpose of the saw cut or the cut around the piston is to get the

side walls loose. The practice of making that circumferential cut or slot was accomplished with a cut-off tool, in a lathe; a tool practically the same as you cut your ring groove, only a narrower tool. The reason we did not cut it part way around, just opposite these parts that the webs are connected with in Exhibit F, is that if you cut it part [fol. 380] way around that would answer the purpose, but it increases the cost of making the piston, by a separate operation for cross-slotting.

The change over to pistons like Exhibits E and G was made sometime in 1920, as near as I can remember. We had some metal molds made by the Walker M. Levett Company, about then. I wouldn't say positively on that date. By "we" I mean that was made by Weems; that Mr. Long was entirely out of it at that time. Mr. Long had no interest in Weems' business at all, after he sold out. As far as the making of pistons was concerned, we had to comply with his patents, as near as we could. He was paid a royalty on the tenth of every month, from the time Mr. Weems took his business, until it expired. I know that to my own knowledge. He was paid twenty cents per piston.

The reliefs in Exhibits E and G, opposite each wrist-pin boss, were cast in there. In Exhibit F they were cut at the time the piston was machined. The cut was made with a small tool, with a cam action. This tool would come down and cut a distance, and then turn it over and cut the other side. That was while I was still with Long, that we made the first cam action cut. I can notice evidence of such action on Exhibit F. It is the tool marks. By noticing this closely, you can see the feed of the return of this tool.

In Exhibit E, near the lower ring land, the skirt deflects inwardly, and has some oil holes. That inward deflection was just an offset put in there to give us a position to drill our oil holes. That was the purpose of the same deflection in Exhibit G, also.

In Exhibits E and G there are three ribs across the head, while in Exhibit F there is only one rib across the head: That was done to strengthen the piston on the inside, because we had some trouble with breakage on this Exhibit F.

I can produce a core box that was used between Exhibit F and Exhibit E. (Witness produces core box.)

Mr. Bruninga: The core box produced by the witness is marked for identification, "Defendants' Exhibit Q."

(Narrative continued) This Exhibit Q was a core box for a piston for Series 9 Franklin cars, and was started by Mr. E. C. Long. This core box was finished, after Mr. Weems bought the business this core box was finished. I [fol. 381] obtained it in our own shop, the shop formerly owned by Mr. Weems. It has been in the shop since about 1920; since it was returned from Walker M. Levett. This particular core box, Exhibit Q, was sent to Walker M. Levett. It forms the core for the inside of a piston, and I don't think it was ever used before it was sent to Mr. Levett.

Q. 173. Can you sketch out briefly the procedure that is followed by a core maker, in making a core with this box, Exhibit Q?

Mr. Richey: That is objected to as immaterial.

A. Yes sir.

Mr. Bruninga:

Q. 174. Please do so; just very briefly state how a core maker would make a core with this box.

(Narrative continued) Well, with this box here, it would be all put together, because this makes a complete core. He puts this core box together and fills it with sand; separates it, and the core sets on the end. It is baked in one piece. It makes a Franklin Series 9 piston. The inside is very similar to the one in Exhibit E.

The small piston you have handed me marked on the inside "O. 1. A" is the type piston made for an Oldsmobile car or Northway Motor.

Mr. Bruninga: The piston is marked for identification as "Defendants' Exhibit R."

(Narrative continued) This is a sand cast piston. Mr. Long had one of those, or some of those castings were pistons for the Northway Motors, when I went to work for him—they were in process of machining. I wouldn't say positively whether they were completed or not, but they were in the process of machining at that time, and later there

were some of them shipped to the Northway Motor Company. That was shortly after I came with Mr. Long. I don't remember just exactly, but shortly after. In the course of, I would say, two months. These pistons that we shipped to the Northway Motors were very similar to piston, Exhibit R. Their structure, with the exception of the cross-web to hold the side walls, the same as Exhibit R. It had six vertical slots, very much like Exhibit R.

The designation O. 1. A. is just to identify this particular casting, for our own shop convenience. This particular piston bears the designation "M. K. Weems"; I [fol. 382] couldn't tell you just exactly when that was made, but, of course, this particular piston was not made by Mr. Long. That was only a stamp that was on top of the piston to identify that it was made by Mr. M. K. Weems. That piston was used in Oldsmobile Six. It was made right around war time. I know, at the time I went to Mr. Long there was one or two of these motors at the shop at that time, having some work done on them. I won't say whether they had pistons in them or not, because that I don't know.

The designation "2.774" on top of piston, Exhibit R, signifies the size of the piston; that is the diameter in inches. The designation "5" indicates the cylinder that it fits in.

I can make drawings, and I have made drawings with Mr. Long and Weems.

Mr. Bruninga: I hand you a tracing marked "Oldsmobile Six." I will have this marked for identification as "Defendants' Exhibit S."

(Narrative continued) This is a tracing I made for an Oldsmobile Six piston, the same as in Exhibit R. There is a little difference in the piston R than the drawing S. In the top of the piston, on the inside, the drawing only shows one rib. (After examining piston.) I was under the impression that this piston had the three ribs in the top, that we later put in. When I picked it up I found there was only the one rib in this. This drawing was made for the piston as Exhibit R. After Mr. Weems took the business over some pistons like Exhibit R were made; but before Mr. Weems took it there was an Oldsmobile piston, for a Northway eight motor, which was a little different than this piston, as that bore of that cylinder is two and seven-eighths in diameter, and there was a little difference in the depres-

sion, that is, the distance between the wrist-pin boss and the top of the piston. So far as the slot and the web were concerned, the construction was just the same.

I made the drawing, Exhibit S, after Weems took the business. I couldn't say just how long after. I should judge we sold probably one hundred or one hundred and fifty of those pistons like Exhibit R, after Weems took the business. That runs from 1920 to 1930.

(Witness is handed tracing, marked for identification "Defendants' Exhibit T-1.")

[fol. 383] This is a tracing I made for a Ford, Model T. Weems made some of those pistons, but we never made a great many, because they were too expensive to put in Ford cars. We sold some of them, back as far as 1919. That tracing was made sometime after Mr. Weems had taken the business, around—well, I'd say, in 1920, because most of these drawings were made up shortly after Mr. Weems took the business.

Those Ford pistons were made of aluminum alloy; an aluminum alloy piston was made from this drawing.

(Witness is handed a tracing marked for identification "Defendant's Exhibit T-2.")

I made this drawing near the time the Ford piston was made; in fact, we made up a number of these drawings and had patterns made for them, and made a little stock of pistons for these cars. That was the Essex, Ford. Aluminum was the metal used to make them. We sold some of these pistons in the years ranging from 1920 to 1930, probably. There was pistons in stock like that, a very short time ago. I don't recall how many Essex pistons were sold.

Regarding the other automobiles other than the Olds, Essex, Ford and Franklin, that Weems made aluminum alloy pistons for: we made up about eighty different patterns and core boxes, as far as slotted skirt pistons, same as shown in Exhibit R, in such cars as Hudson Super Six, Stutz, Marmon, McFarland—in fact, all cars that were made at that time. We did have a Chalmers Six, about 1920, and we had a Maxwell, but I don't believe that we have got a Maxwell, a drawing of the Maxwell piston, because that piston and core box was made in Mr. Long's time. Mr. Long made that box and piston himself. It was not necessary for

me to make a drawing of it. I haven't a drawing of the Chalmers; there was some of those pistons that we made later, that I didn't make a drawing of.

Weems made no pistons other than the six slotted, cross-web construction; only a few cast iron pistons, for special jobs, such as tractors and stationary engines. It would be hard to say how many different kinds of pistons of the six slotted, web construction, Weems made in 1920. Some of the cars he made pistons for, in 1920, were Oldsmobile, both six and eight; Franklin cars, Series 9 and Series 8, and in 1920, we made a piston for Dusenberg, four-cylinder racing car.

[fol. 384] (Witness is handed drawing, marked for identification "Defendants' Exhibit T-3.")

I made this drawing in 1920. The piston for the Dusenberg was made from this drawing. I couldn't say how many of those Long, six-slotted pistons with the cross-webs in them, Weems made during 1920. We made quite a lot of them; in fact, our shop at that time—we were very busy on making pistons.

During the first part of 1920 there was only about five men employed in the shop. Or rather, there were three men and two boys. One was an apprentice and the other was just a handy man. That was besides myself; I was still superintendent, in 1920.

Our capacity per day was very small at that time, because we was not hardly fixed to make pistons. But we did manage to turn out quite a—tool up a few with our common engine lathes. Most of the pistons that we sold we sold to Franklin dealers throughout the country. The dealers I remember was the Franklin Motor Company in Chicago; and there was a number of pistons—quite a lot of them—sold to the Franklin dealer in St. Louis; in fact, there was a number of Franklin dealers all over the United States who bought pistons from us at that time. We also had a customer in Wichita Falls, Texas, that bought lots of pistons from us. Their business started early in 1920, and continued along for a number of years.

Q. 244. And those were all of the six-slotted, cross-web type like these exhibits that are before you on the table Exhibits E, F and G?

Mr. Richey: That is objected to as leading.

A. Yes, sir; they were all made of that type, because that was the only pistons we made, was the pistons with the six slots.

(Narrative continued) Mr. Long was being paid a royalty on every one at that time. We have been making Long pistons up to, I will say, the first of the year. Since then our shop has been shut down.

Yes, there were some of those six-slotted, cross-web type pistons, shipped to the Maxwell Company. I can't recall the dates, now. I don't remember whether we shipped any to the Chalmers Company.

I should say Weems made several thousand of those Long pistons in that period before he died. According to the old books, from about January, 1919, to July—I forget just [fol. 385] what year—1924, we made about fifty thousand dollars worth of pistons.

Mr. Richey: I object to the answer as testifying to the contents of records.

(Narrative continued) I made a check-up of the Weems business before I bought it; I knew pretty well what the business was, being with it from its infancy. Weems did some advertising. He advertised in Motor Age, and a few other trade papers; I don't recall just what they were, now.

(Witness' attention is called to the July 7th, 1921, number of Motor Age, page 124, containing an advertisement entitled "The 'Long' Type Non-Expanding Aluminum Alloy Piston. M. K. Weems, Licensed Manufacturer.")

This is an advertisement by the Mr. Weems whom we have been talking about, and I recognize it.

Q. 255. Of what kind of a piston is the advertisement?

Mr. Richey: That is objected to, as the advertisement is the best evidence.

(Narrative continued) Well, that has the appearance of a Franklin piston. That cut was not used in Mr. Weems' other advertisements. As I remember, this cut here was made by the Motor Age, themselves.

Mr. Bruninga: Page 124 of Motor Age, is marked for identification as "Defendent's Exhibit U."

(Narrative continued) I have some books of the Weems Company, which I brought with me. I came in possession

of those books, (which are marked for identification as "Defendent's Exhibits V, V-1, V-2, V-3, V-4, V-5, V-6, V-7") when I bought the business from the Weems estate.

Exhibit V is the book of inventory, stock of machinery and parts and materials, pistons, finished and unfinished, that were in the shop when Mr. Weems took possession. A man by the name of Royalty, made out the inventory. I don't remember his first name. Yes, it was Sidney. He is now located at Jacksonville, Illinois. He was with Weems when Weems took over the business; before that he worked for Mr. Long. I don't know just how long. He was with Mr. Long at the time I was with him.

[fol. 386] I can identify Exhibit V, that particular book. I had nothing to do with the taking of the inventory, however. I recognize Mr. Royalty's handwriting, and to my knowledge, it is Mr. Royalty's handwriting in that book.

Q. 273. Page 28 of that book bears the following notations:

"4 Hup pistons nearly finished. 8 Maxwell pistons 14½ lbs. aluminum. 11 Holmes pistons 19¾ lbs. aluminum. 5 Hup pistons ⅞ finished. 4 Overland 13 casty's 5¾ lbs. aluminum. 4 Hup pistons 5 lbs. aluminum. 16 Northway pistons almost finished. 24 Aluminum pistons Packard twin six 38 lbs. 6 Franklin Series 8 pistons 12½ pounds. 1 Ford aluminum 2."

Page 29 bears the following designations:

"4 Overland finished aluminum complete pistons Fin. goods 20.00.

10½ lbs. finished Franklin pistons .21 Fin. goods.

65 patterns & core box for pistons, etc. 3.00 patterns 195.00."

Have you any recollection, yourself, about those items, as to whether or not they were in the shop at that time?

Mr. Richey: I object to the question as leading.

A. Well, they were in the shop at the time the inventory was taken, and there is some of those patterns there yet.

(Narrative continued) The statement "65 patterns and core boxes for Pistons" refers to such as the Franklin and Maxwell and Oldsmobile, and these various types of pistons

such as Exhibits E and R. There were a few other type pistons, a few patterns there for iron pistons used in stationary engines and tractors. The "4 Overland finished aluminum complete pistons" has reference, I think, to an Overland. That was a piston with the six slots. The "10½ lbs. finished Franklin pistons" refers to the six slot pistons. The "16 Northway piston almost finished" refers to six slot pistons of the same type as Exhibit R.

[fol. 387] The "Aluminum pistons Packard twin six," item 47.50 were pistons made for the six slot type, for test purposes, for the Packard Company. They were shipped out to the Packard Company—if I remember right, I think we just turned those pistons back to Mr. Long and he took care of that shipment himself. Judging from the price, $47.50, I imagine they were partly finished.

The eight Maxwell pistons, shown on page 28, were of the six slot type, too. The Hup piston—I think that was an iron piston that was there. I think all three items referring to Hup pistons were all iron pistons. The one Ford aluminum piston was of the six slot type, the same as Exhibit R.

Defendants' Exhibit V-1 is a cash book; in other words, it is a book that shows what we bought in the way of castings; also what we sold in the way of castings. The book was kept by a Miss Landon. Her first name was Anna. I don't know exactly where she is, but I think she is in Davenport, now. She is married, and I do not know her married name; I have not seen her for at least four or five years. She kept the books from the first of November, 1919, until about 1921—I don't know the exact date that we made the change, but she was with us probably about two years. I am familiar with her handwriting and would say that most of this book is in her handwriting. I think there are some items in the back of the book that was written by one of the other girls that came later—a Miss Erke. I cannot think of her first name, but she is in Denver. I do not know her address. I wouldn't swear to her handwriting, because there was two or three girls that followed her and I couldn't tell just when she did make entries in the book.

I am familiar with this book, Exhibit V-1; I saw Miss Landon keep the book, and make the entries. The item, on page 3, "Walker M. Levett Co. 164.03" refers to some castings of the Long type piston, because that is all we had

made—castings we had made by Levett. Another item on page 3, on November 28, 1919, "Walker M. Levett Co. 316-33"; that was for aluminum alloy pistons. We did no other business with Walker M. Levett Company, except for aluminum alloy pistons. The handwriting on those two items noted, under November 10 and November 28, 1919, is Miss Landon's.

Another item for December 6th, 1919, on page 7 of Exhibit V-1, "Walker M. Levett Co. 243.12," is for castings. Those [fol. 388] other items on page 6, under dates of December 8, December 12,—those are all for aluminum piston castings.

I can remember that those castings were coming through at that time from Walker M. Levett Company and being sold, and shipped out to these different dealers. Those castings were machined in the shop, and the pistons were of the six-slotted type. Walker M. Levett Company made no other castings for us, except for the six-slotted type, until later years; not up until 1925. We got some plain aluminum pistons, such as used in the Reo cars, of the solid type.

On page 7 of Exhibit V-1, under December 6, 1919, is the following entry: "E. C. Long Royalties for sales pistons 27.40"; that item was the royalty that we paid Mr. Long. We paid him that royalty each month; between the first and tenth of every month.

The items on the following pages:

"Page 11, January 6, 1920, E. D. Long, Royalties 24.00;
Page 15, under date of February 7, E. C. Long, Royalty 80.60;
Page 19, March 3, E. C. Long, Royalty 127.80;
Page 25, April 9, E. C. Long, 157.60;
Page 31, May 10, E. C. Long, Royalties 106.40;
Page 37, June 8, 1920, E. C. Long royalties 138.40;
Page 41, July 8, E. C. Long 117.80;
Page 47, August 7, E. C. Long 96.40;
Page 53, September 10, E. C. Long 151.60;
Page 57, October 9, 1920, E. C. Long 87.20;
Page 63, November 10, 1920, E. C. Long 103.40;
Page 69, December 10, 1920, E. C. Long 69.20;
Page 73, January 10, 1921, E. C. Long 71.80."

These were all royalties that were paid Mr. Long at the rate of twenty cents apiece for each piston. The items are

in Miss Landon's handwriting. Mr. Long was paid twenty cents a piston royalty between the first and tenth of each month, on the pistons manufactured. The way we did that, you know, at the last operation that the piston went through, we had that boy keep a record of every piston. That was turned in to the office and that was what Mr. Long collected his royalty on.

On page 18 of Defendants' Exhibit V-1," an item under March 12, 1920, reads, "Franklin Motor Car Co. So. Bend, [fol. 389] Ind. 327.62"; that represents pistons that were shipped to the Franklin Motor Car Company at South Bend. I have no recollection, other than the records on the book, of that shipment; that is all.

Mr. Richey: I object to the testimony as incompetent.

(Narrative continued) On page 24 of "Defendants' Exhibit V-1," under date of April 9, 1920, is the item, "Northway Motor & Mfg. Co., Detroit 35.70": that represents the pistons Mr. Long started there in the shop and we finished them up and shipped them to the Northway Motor Company. I do not know anything about the notation above the 35.70 that looks like L 8. I have a recollection of that transaction, independently of that record, however. I remember of making up those pistons and that we had some trouble in getting wrist-pins for them, and we had the Northway Motor Company send us wrist-pins for them. That is one thing that makes me remember this particular shipment. They were the pistons with the six slots, similar to this Exhibit R.

On the same page, 24, there are two items under date of April 19, 1924, "Franklin Ross Motor St. Louis": I can remember that transaction. We shipped those—we shipped quite a lot of pistons to Franklin Ross at St. Louis. They were Franklin Dealers at that time. They sold the Franklin car, here in St. Louis.

On page 14 of Defendants' Exhibit V-1," under date of February 5, 1920, is an item "Chas. L. Bartlett Jan. Acct. 141.03": according to my recollection of that transaction, we reground the pistons in that car and fit them with a set of these six slot pistons—we reground the cylinders; fitted the cylinders with six slot pistons. The Long six slot pistons. I recall that transaction independently of this record, because I bought the car afterwards. I bought the

car in about 1920—I think it was about in October, if I remember right.

On page 58 of "Defendants' Exhibit V-1," under date of October 21, 1920, there is the entry, "Chas. Bartlett, Local 1420.00": That transaction was the sale of a new car. I remember that transaction myself, independent of this record. The entry on October 22, 1920, of "Chas. Chadwick 750.00" was the cash payment on that Bartlett car, by myself. The pistons in that car were the six slot Long type piston. [fol. 390] "Defendants' Exhibit V-2" is kind of a ledger, is what you would call it, of the M. K. Weems Company. It was kept by Miss Landon.

Under Account No. 31, consisting of five pages, there are entries under the heading "Sales Pistons": Those represent the sales of the pistons, that is, the sales were lumped altogether. It just shows the amount of pistons that were sold each month, and for a period of months. That is Miss Landon's handwriting there, and that is not (indicating on book). This is her handwriting (indicating on exhibit book); but this item does not apply to piston sales, this particular part right here (indicating on exhibit book). The dates are June 30 and July 31, 1921.

The section entitled "31 A," one sheet, entitled "Sales Iron Pistons" relates to iron pistons; some of those are resale pistons, pistons that we bought in a semi-finished state. Account No. 31 all relates to aluminum pistons, of the six slot pistons, Long type. I think that these items were taken from another book, and this J, I imagine, means the journal. I do not have that Journal—that book has been destroyed. We had that book until probably six months ago, and we wanted to use the ledger itself, and we just opened it up and shook all the leaves out in the paper basket, and they were burned. I have investigated and found that is what became of the book.

Under Account 44, in "Defendants' Exhibit V-2," is a series of entries, beginning with November, 1919, to July 31, 1931, entitled "Cost of Pistons Sold": That relates to the Long type pistons entirely, and is in Miss Landon's handwriting.

Exhibit V-3 is a book of purchases, book of entry of purchases, of different things, such as castings and repair parts, and things of that kind. There are a number of entries in this book, "Walker Levett and Co.": Those were all for

piston castings. Those were the only transactions we had with Walker Levett Company, for castings and for molds for piston castings.

"Defendants' Exhibit V-4" is an entry book consisting of sales, costs, factory expense, and such items. The item on page 6 of this book, under date of December 31, 1919, reading, "E. C. Long Chas. Bartlett for 6 pistons @ 9.80; 6 wrist pins @ .80 and 18 rings @ .80" was for pistons we put in that Franklin car that I purchased from Mr. Weems, that he took in trade with Mr. Bartlett, about which I previously testified.

[fol. 391] On page 10, under date of January 23, 1920, is an item under "Advertising E. C. Long, Giving Mr. Long Cost price on pistons etc. used in Mr. Chas. Bartlett's car"; this car was torn down at the time Mr. Weems bought the business, and Mr. Weems made those pistons for Mr. Long at practically cost price.

On the page opposite page 1, of "Defendants' Exhibit V-4," the statement reading, "Started new system piston manufacture Aug. 17, 1920. Had men come to office for a short meeting so as to give them better understanding of our methods," is in Miss Landon's handwriting. She referred to the time when we started on our new tooling process making pistons at that time. We got our automatic tooler up and a new way of boring wrist-pin holes. We felt we were really in production at that time. That was for principally Franklin pistons of the Long type. We made some other—no other type, with the exception of for the various cars; all of the same type pistons, only being made for different cars, under different specifications.

I don't know who put "Did not keep this Up," there. It is not the same handwriting as the other.

I think we had about ten men employed in the shop at that time, working on pistons and other work, too. We had four men working on pistons practically all the time. I don't remember our daily output about that time, August 17, 1920.

The book handed me, marked for identification "Defendants' Exhibit V-5," is a daily time book. It starts out in Miss Landon's handwriting, on page 1. The entry of Charles Chadwick refers to myself. S. D. Royalty is the entry of the man I previously referred to, and "Anna M. Landon"

was the one that kept the books. Louisa Rogers was a stenographer at that time.

The book handed me, marked for identification, "Defendants' Exhibit V-6" is a daily time book, from March, 1921, to August 5, 1922; it is a continuation of "Defendants' Exhibit V-5."

"Defendants' Exhibit V-7, dating from August 5, 1922, to December 22, 1923" is the time book from August 5, 1922 to December 22, 1923. It is a continuation of "Defendants' Exhibit V-6."

My only knowledge of Edward J. Gulick, who at one time resided in Elkhart, Indiana, is only just through the patents of his pistons; that is all. That is the only thing I know about him.

[fol. 392] As far as I know, Edward J. Gulick or the Aluminum Company of America never offered me, or Long or Weems, any piston which would function in automobile engines, nor did the Cleveland Trust Company ever do that, as far as I know. All I know is that Gulick got a patent; that is all. I seen it in the patent records; that is all. I believe I have met the Mr. McCoy who is in the room here, before. I think he came to Quincy one time, and he looked over the piston shop. I don't believe he told me who he was representing. I didn't know then that he was representing the Cleveland Trust Company at that time. I don't recall the name of the man with him. I could describe him; he was tall and slender, and he had dark hair. He was the man who cross-examined me in Detroit, at the time of taking testimony there, in one of Mr. Long's interferences. Mr. Watts; I believe that is the man.

They talked of the construction of the piston, and I believe they brought up the Oldsmobile Eight piston. That is the one we talked of mostly at that time. They did not tell me that they were collecting evidence to be used against Mr. Long; not when they were in Quincy. They did not tell me that they were collecting evidence against me or Mr. Weems, for a possible suit. I showed them around the shop—I don't think there was anything they missed. I think I showed them about everything there was. But neither of them told me that they were attorneys representing somebody else. I just thought maybe they were interested parties, interested in our system of manufacturing pistons. Yes, I had shown a number of other people through the shop; showed them our equipment for turning out pistons,

which we were very proud of at that time, and, naturally, we wanted to show it to every one. Some of them came in to be curious and some would be salesmen from outside.

And thereupon, the further taking of the deposition was adjourned until April 29, 1932, at 9:30 o'clock, A. M.

Met pursuant to adjournment as above, on April 29, 1932, at 9:30 o'clock A. M.

The following proceedings were had:

Mr. Bruninga: I offer in evidence "Defendants' Exhibits O, P, Q, R, S, T-1, T-2, T-3 and U."

[fol. 393] (Narrative continued) The books I have produced here, "Defendants' Exhibits V, V-1, V-2, V-3, V-4, V-5, V-6 and V-7," are all the books that I have been able to find, of the Weems business, so far. I have looked for other books, but they have been destroyed. I uncovered them, or found them, just within the last week. I don't know just really what was lost; they were just put in different places where they would be out of the way, and there was no occasion to move them. They were practically lost for a while, because they were covered up with other—. I have no bills, or checks, or other data, relating to the matters given in these books. As to the procedure, in keeping these books, practically all the entries in those books is as to shipments made, or charges growing out of that, that was given in by myself and Mr. Royalty, at that time. Mr. Royalty had charge of the Service Department, and I had charge of the machine shop.

About the matter relating to these Long shipments, when we shipped out Long pistons; we had what we call a requisition, and we would make out the requisition and turn it in to the office, for pistons and other materials. Of course, those requisitions were destroyed after Miss Landon made the entries in her books. I made out the requisitions, as far as the Long six slot pistons were concerned, and I gave them to Miss Landon. During the latter part of 1919, beginning with the time that Weems took over, to and including the year 1920, and the part of 1921, up to the time that Miss Landon left, I was in close contact with the situation, particularly with reference to Long six slot pistons.

Occasionally I referred to the books, myself. I never had occasion to check them, to see whether the entries were properly made. Of course, at times they would ask me about certain parts, charges, that I had to rearrange my requisision; but I was in close contact with all the office work.

Referring to the transaction about the Bartlett automobile, which I purchased later on, the core box used in making the cores for those pistons, was an old wooden core box. There is no core box before me, that those pistons or cores were made from.

I remember Mr. Long going to Syracuse during the time I was with him, and prior to the time that Weems took over the business. That occasion was in March, 1919, or the early part of 1919. I remembered about it because one thing that impressed me more than anything else was that [fol. 394] Mr. Long was at Syracuse, and he telephoned me to make him up some more pistons and send them for trial. They were the six slot kind of pistons (indicating exhibit) like that Exhibit F.

Yes, I have heard of Mr. Gunn, of the Packard Company —or, I couldn't say whether his name was Mr. Gunn or not, but I remember one of the Packard men being in the shop there, that was around with us for some little time. I remember there was pistons shipped to the Packard Company, but I couldn't relate any dates on that. They were the six slot pistons. That was the R pistons (indicating Exhibit R). I don't remember whether that was before or after Mr. Weems took over the business.

These pistons, Exhibits E, F, G and R, have a relief space in the region of the wrist pin bosses: Those relief spaces were always put on there, on the six slot cross-web Long pistons, while I was with Weems. There is no time that we ever made any pistons that that relief was not put on, either cast in the molds or cut after the pistons were turned.

I remember, very definitely, a Mohrenstecher car; it was a Franklin, Series 9; one of the first Series 9 models. I think it was made in 1916.

Mr. Richey: I object to that part of the answer that says it was made in 1916, as being hearsay.

(Narrative continued) I have been familiar with Franklin automobiles since 1918, in December, was my first experience with any Franklin Service. I had seen Franklin automobiles and driven them before that. I had seen a 1916

Franklin automobile before that time, yes, sir. I saw a 1916 Franklin shortly after it was put on the market.

The Mohrenstecher car was a car that had given a good deal of trouble. I worked for Mr. Mohrenstecher after Mr. Weems had bought Mr. Long's business, and made an agreement with him to take that car out to our place and recondition the cylinders and put in a new set of pistons, for just actual cost, because Mr. Mohrenstecher had so much trouble with his car that we felt like we were doing him a favor by making this free service.

Q. 461. What did you do?

Mr. Richey: I still object to the testimony regarding the trouble with this car as hearsay.

[fol. 395] A. We ground the cylinders, and we fitted it up with pistons, the same as Exhibit F.

(Narrative continued) That was done some time in 1920. We took some pistons out of the car—not exactly like this; they had a U-slot on one side and a T-slot on the other side. I imagine it was a trunk piston. There was not much difference between that and the present piston, that is, on the inside. The horizontal part of the T was right up under the—just below the first ring land. The vertical part of the T was in the center of the skirt, that is, opposite the wrist-pin boss. I mean between the wrist-pin bosses, opposite, not along the line of the wrist-pin boss. And on the other side was a U-slot. There was two slots up the side and then across, but the slots didn't go the full length of the skirt of the piston.

(Witness is handed photostat marked for identification, "Defendants' Exhibit W.")

Those six figures represent just a common trunk piston. The piston that I took out of the Mohrenstecher car was very much the same as the piston shown by Exhibit W, with the exception it had a rib extending from the side wall of the piston to the wrist-pin boss, on one side, and nothing on the other side. That was the piston I took out. I could make a sketch, on Exhibit W, showing any differences, or any additions, on the piston taken out of that Mohrenstecher car.

(Witness makes sketch on Exhibit W, as requested.)

I have indicated only the changes, on Figs. 1 and 4. Those slots extended all the way through the piston wall. I testified that that piston had a web on the inside, but I didn't show that. I will show that on Fig. 6 (sketching on exhibit). I have sketched a web on Fig. 6 and also a web on Fig. 5; there was just a single web in that piston. That web connected on the side that showed the T-slot. I can sketch it, also, on Fig. 4, where that web was. (Sketches on Exhibit.) I have shown two webs extending from one side of the piston, in Fig. 4, and only one web, in Fig. 5; it is only on one side of the piston, but there were two webs. I mean, it was only one side of the piston, from the wrist-pin bosses to the piston wall. That was the construction of the piston that I took out of the Mohrenstecher car. The condition of the pistons was not so bad, but the condition of the [fol. 396] cylinders was terrible. It was such a poor job boring the cylinders, that it was impossible for the piston to function properly with the cylinder in that condition. The cylinder was bored tapered. As for the pistons, I believe there was two or three of them that was scored, but at the very top of the piston, back in the ring lands; the rings was stuck tight in the piston, and one or two of those cylinders —I don't remember whether it was one or two, but I am positive there was one of them. The pistons were junked; they were thrown out in the junk pile. I don't know where they are now. I have looked around and tried to find something—some of those pistons, but, of course, that has been a long time ago, and all that stuff was evidently taken out. Those were the only T-slot pistons that I remember and could identify. That was in the year 1920, that I took those pistons out of the Mohrenstecher car, and I put in pistons like Exhibit F, yes. The pistons that I put back in, worked fine. I kept track of the car for quite a while. We kept a check on the car for some time after. I don't know who put those T-slot pistons in Mr. Mohrenstecher's car. I didn't put them in, and they were not put in while I was with Long. I know, because if there had been I would probably have made up the pistons, or they would have been made under my direction, because everything that was made in the shop went through my hands.

Mr. Bruninga: I offer in evidence, "Defendants' Exhibit W."

Mr. Bruninga: That is all.

Cross-examination.

By Mr. Richey:

I couldn't tell you the exact date of this telephone conversation with Mr. Long, from Syracuse, in March, 1919. I wouldn't swear to the part of the conversation about Mr. Long saying he wanted to show those pistons to Mr. Stellman. I don't remember whether he said he wanted to show them to Mr. Stellman. He said he wanted them for test purposes at the Franklin plant. I sent two sets, twelve, as near as I can remember, and they were like Exhibit F, here.

Mr. Long took some of the pistons with him when he went to Syracuse, like Exhibit F. I would not say positively how many he took, but I know he took a set, enough to equip a motor with—that is six. I don't remember the exact conversations we had when he came back from Syracuse, any [fol. 397] further than that the test was very satisfactory at the factory. I don't think he said that he had shown Mr. Stellman any of the pistons he took with him, but I don't remember. When he talked to me over the telephone he did not mention any particular parties he had shown the pistons to, further than the engineers of the Franklin Company. When he came back he confirmed that, but did not mention the names of the engineers—he might have, but I would not say positively the names of the engineers, at all. I don't remember whether he said he had shown them to anybody except the engineers of the Franklin Company, either over the telephone, or when he returned. I don't remember that part of it.

I shipped these Exhibit R pistons to the Packard Company for the purpose of having them test them out. To my knowledge they never adopted this piston, and we never sold any of them to the Packard Company. I don't remember whether those pistons were shipped to the Packard Company before or after Mr. Weems took the business.

We also shipped some of these six-slot pistons to the Northway Motor Company and to Maxwell, I think at that time, the Chalmers Company. I can't recall any others now. The Maxwell Company did not adopt this piston as standard equipment, and neither did the Northway.

The pistons used in the Mohrenstecher car were aluminum pistons. That was one of Mr. Long's designs, made prior to this six-slot piston. I saw other designs of pistons

made by Mr. Long. There was a number of pistons around there that Mr. Long made for customers. Some were slotted one way and some another, and hard to be described, the different ways the pistons were slotted. I saw a number of different designs of pistons that Mr. Long had made—they were around the place there, when I went there.

Part of the trouble with the pistons in the Mohrenstecher car was, of course, piston slap, because the cylinders was so large at the bottom that the piston naturally would be loose at the downward stroke of the shaft. You bring the piston down where it couldn't help but rattle. There was a piston slap and pistons sticking at the same time. Kind of a double evil affair, yes, sir.

The pistons didn't seem to be collapsed—the piston-seemed to be in perfect condition, with the exception of [fol. 398] one in particular. The cylinder was so much smaller at the top that when the piston would go at the top it would stick in the top of the cylinder and naturally it scored the piston at the ring land. In that way it tightened the rings in the piston, and the rings couldn't expand out along the cylinder wall.

Some of the other designs of pistons I saw around there at Mr. Long's, except the six slot piston, had evidences of scoring. I seen some of them that we put in and made trials with and taken out, and they would be scored on the side, and some would even be practically melted, in places. Mr. Long made many efforts to get a satisfactory aluminum piston before he got to this six-slotted piston. In his experiments he made a number of different kinds, of different shapes, and a number of them I saw around there.

I would not say they all showed evidences of failure until this six-slotted one, because he had some there that he made tests with, that didn't show any particular score or damage to the piston after it made the run. But a good many of them did.

I saw them put in just one piston. They removed one cylinder and installed the piston in there to make a test, and then took it out to see the results. This was not a block test. In the Franklin motor you can remove one cylinder and not interfere with the rest, and in that way they could install the piston and go out and make the test run with it and come back. We finally settled on this six slot piston and the only car manufacturer that adopted that was the Franklin—and the Holmes adopted the same piston. I don't know

just how long Holmes used it. They failed a good many years ago, and I know they used it up to the time they failed.

I spoke of seeing iron pistons that had a relief around the bosses; that was to keep the piston from scoring the cylinder due to pin expansion. It would expand the piston more if they ran with the wrist-pin, than it would the other way. The piston was originally fit with a clearance, but you have to allow more clearance on the side than you do the other way. You have to do that because if the pin if fit tight into a piston—of course, take a piston with an oscillating pin, that doesn't make so much difference, but a pin that is fit absolutely tight in a piston, and loose on the connecting line, there is no way for that to slide on the wrist-pin, due to the expansion, and the result of it is that it forces [fol. 399] that wall out. The cylinder wall is expanded, too, but doesn't get the extreme heat that your piston gets. So, even when there is an iron piston and an iron cylinder, there is danger of the iron piston expanding out and scoring the cylinder, and for that reason this relief was put in.

I couldn't say the exact number of aluminum pistons with slotted skirts the Weems Company made and sold in the year 1919, or anywhere near it. In the year '19, we took that business at such a late time that there probably was not more than maybe one hundred pistons made in the year 1919. That is just what Mr. Weems did; I don't know how many Mr. Long made and sold. In the year 1920 the Weems Company sold in the neighborhood of a thousand pistons. There were several years there that we ran along pretty near the same. In 1921 we probably made a little more than that; we probably ran—that would run three or four thousand, I guess, in the second year. Let me see: 1921 and 1922—that was when we had the biggest run on those. We had about the same run in 1921 as in 1922. In 1923 that began to slow down a little bit at that time. I couldn't tell you just how many pistons we made that year. That is hard to remember. It naturally began to go down a little, because we were not getting as much of the cylinder grinding shipped to us from all over the country, that we had in the early part. 1921 and 1922 were our biggest years.

Yes, during those years there were millions of pistons being put in motors, both in original installations and replacements, so that what we sold was a mere drop

in the bucket. I should judge that a great number of those millions of pistons sold from 1920 on, were aluminum pistons, sold by others. A great many of them were sold to the car manufacturers from 1920 on, in original installations.

I don't know who sold these aluminum pistons. There is a number of different kinds of pistons that was in the automobiles that I couldn't tell you anything about who made the pistons, unless I took one of them out of the car, but I remember seeing the Lynite pistons, and that was about the—I know they were Lynite, because I know they had a terrible black name. The Lynite was a trunk type piston, and they never were successful until they put a slot up the side; but after they were slotted they were successful.

The trouble with these trunk type aluminum pistons that were such a failure, was that they had such an unusual [fol. 400] clearance that when the motor was cold they would slap and make a terrible noise, and then when the motor would warm up they would expand more than the cylinder wall, so much more that they would stick in the cylinders.

I did the red ink work on the drawing, Exhibit O, yesterday morning, in Mr. Bruninga's office. It was made for the purpose of my examination. Mr. Bruninga asked me to sketch this drawing to show that the ribs could be added to a trunk type of piston, and also add these slots to it—that was the purpose in my making the drawing.

Referring to those particular pistons on counsel table (Exhibits E, F, G and R), I seen E and R and the F pistons before, because they were made by myself.

X Q. 81. Well, when you say that, you just say that you made all these pistons, and therefore you made these, but I am asking when do you have any distinct recollection of having seem them, independent of any argument that you must have made them?

(Narrative continued) The first time I seen them was right here in the office—that was when I came in Tuesday. I saw Exhibit R about two weeks ago, when Mr. Wilkinson, or his man, brought that from Hannibal up there and showed it to me. I saw both Mr. Bruninga and Mr. Wilkinson, his assistant, at Quincy about two weeks ago. That

was the first time I saw this Exhibit R; they brought it up there and showed it to me.

Neither Mr. Bruninga or Mr. Wilkinson told me that if I saw you or Mr. McCoy, or anybody representing the plaintiffs in this case, that I was to refuse to answer any questions that I was asked. Nor did they tell me that I was to reply to anything that you asked me, by telling you that I would answer that question on the witness-stand.

I have been stopping at the Mayfair, here in St. Louis. Mr. Stellman is not, to my knowledge, stopping there.

Referring to this core box, Exhibit P: Mr. Long had that box made up. It is one that he left there at the place. Evidently that box had been shipped to Levett, and Levett always put his name in his castings. I don't know when it was shipped to or back from Levett. It has been at Quincy ever since Mr. Weems took the business over, in December, 1919. That was among the patterns that came to us, and it has not been shipped down to Mr. Levett since then. I don't [fol. 401] know how long it has been since this core box was used—it has not been used since Mr. Weems took the business.

These holes that run through the box, from the bottom of the slots, is just a convenience for the core maker to make the—to get the core out of the box.

The Levett Company was in the business of making aluminum pistons during the time the Weems Company was making and selling pistons—we got pistons from the Levett Company as long as they were in business. Levett and Company also sold aluminum pistons to the trade in general.

In connection with Exhibit T-1, I said that this six slot piston, shown in Exhibits E, F, G and R, was too expensive for the Ford. It cost us too much money to make it. We had no dies for making the piston, and we had to pay a dollar a pound for the metal, and the piston casting itself cost about two and a half dollars. By the time we machined them, it made the job too expensive for the average Ford owner.

Referring to this slot—horizontal slot—under the bottom land, Mr. Long and I worked that out together. That is, cutting the slot all the way around was worked out by he and I before I went there with him. I had not done any work with him on it before I went there. The design of these six slot pistons, as we have here—Exhibits E, F, G

and R, was not entirely completed until after I went to Mr. Long's place. They had the ribs in them as they have them now, but we made some little changes in cutting the groove around, to make our machining a little easier. We also made a metal core box, after I went to work on it with him, that showed three ribs in the inside, at the top of the piston, instead of one like is in Exhibit F. I have named practically all the changes that I made in pistons like these exhibits after I went to work for Mr. Long. There were no other changes made further then when they had the dies made, of course, naturally, we cast the relief, so we would not have to cut that relief after the piston was machined. That is all the changes I remember at present, but I would not say that was all of them.

We began to make the pistons with the three ribs and the head, like shown in Exhibit E, let me see: If you take core box, Q, we started belong Mr. Long left, that is, before he sold the business to Mr. Weems, and we finished it up after Mr. Weems took the business. Just how much Mr. Long [fol. 402] had done on it, I couldn't say now. But we didn't make them with the three ribs and head until after Mr. Weems took over the business.

I can't remember the exact time Mr. McCoy and Mr. Watts came to see me in Quincy, because I have nothing that makes me remember that date.

Yes, I said I was very open with them, and showed them everything regarding these Long pistons. I was very proud of our process of machining and was glad to show it to anyone who came along. I did not show them these books, Exhibits V to V-7, or either of the core boxes, Exhibits P or Q. They did not tell me that they represented any interest that was hostile to us. I don't think anybody has said anything to me about your representing hostile interests to this time. I knew, when I was on the stand in Detroit, that Mr. McCoy was for the Aluminum Company of America, but I never knew it until I met him in Detroit—I mean Mr. Watts. Since then I have produced these books and these core boxes. They have been in the building and have been in my possession all the time.

X Q. 130. Mr. McCoy and Mr. Watts talked to you and Mr. Weems both, didn't they?

Mr. Bruninga: That is objected to, because Mr. Weems is dead.

Mr. Richey:

X Q. 131. Mr. Weems was present at the conversation, or some of it, was he not?

Mr. Bruninga: Same objection.

(Narrative continued) Not to my knowledge. They talked to me out in the shop, and I wouldn't say positively whether they went to the office or not. That I couldn't positively say, because I didn't go to the office with them. Everything I told them then was true, as near as I—I had no occasion to tell them anything but the truth.

I know an attorney in Quincy, named Lancaster. I don't think I went to Mr. Lancaster's office with Mr. Watts, Mr. McCoy and Mr. Weems. I don't think I did; I don't remember that I did. I don't know whether they went to Mr. Lancaster's office, either.

Mr. Bruninga: Has counsel another affidavit that he is going to flash?

[fol. 403] Mr. Richey: Have we flashed an affidavit in this case, yet? You said "another."

Mr. Bruninga: I am talking about affidavits in other proceedings, that have been flashed by witnesses.

Mr. Richey: What other proceedings?

Mr. Bruninga: Interferences involving the Long and Gulick application; flashed by Mr. Gilbert, and carefully worded so as only to include his own company and not his predecessor.

Mr. Richey: Do you want that in the record?

Mr. Bruninga: I do want that in the record.

Mr. Richey: We object to counsel testifying; he is not under oath, and is manifestly testifying to something that is hearsay with him, and we also deny the statement that he makes.

The record in the interference proceedings will show that Mr. Gilbert was called and testified.

Mr. Bruninga, you have reference to interference numbers 49,569, 49,570 and 49,571?

Mr. Bruninga: I do not know what interference it was. At the proper time it will be introduced.

Mr. Richey: You have made charges here and it is up to you to make them definite.

Mr. Bruninga: At the proper time they will be made definite.

Mr. Richey: I produce the interference records in which Mr. Gilbert testified on behalf of the party, Gulick; these are the records that were used in the United States Court of Customs and Patent Appeals, and ask that they be marked for identification, as "Plaintiffs' Exhibits 1 and 2."

(The record in Case No. 2608 was thereupon marked "Plaintiffs' Exhibit No. 1" and the record in Case No. 2609 was marked "Plaintiffs' Exhibit No. 2.")

Mr. Richey: I will state that these are the only two that I have any recollection of ever having examined Mr. Gilbert in, and unless counsel for the other side is pettifogging, I invite him to point out where we at any time flashed this so-called affidavit of Mr. Gilbert, in his examination.

Mr. Bruninga: Counsel admits he made a mistake. What I had in mind was the affidavit signed by Albert R. Bush, as [fol. 404] to a transaction of the Bush Foundry & Metal Wheel Company of Quincy, Illinois, as distinguished from the predecessor of the Bush Foundry & Metal Wheel Company, in Interference 49,571, Long's record, pages 198 and 199; Long's record in that interference, pages 193 and 201.

If we both have it out of our systems, I will wipe it out, or let it stand.

Mr. Richey: We will let it stand.

Mr. Bruninga: Are you willing to stipulate the pages of that testimony that I just referred to?

Mr. Richey: No, not alone; not without the entire record. I will put in the whole record, in the other cases.

Mr. Bruninga: No.

Mr. Richey: Mr. Gehr was the cross-examiner there, and I do not see anything at all reprehensible, or to be criticized, about his confronting the witness with an affidavit on cross examination. As I understand that, it is perfectly proper procedure.

Mr. Bruninga: Counsel may think it is proper procedure, but I do not.

Mr. Richey: I am not willing that part of the record should go in; I think the whole record should go in. If counsel intends to make any charges, I think, in fairness to Mr. Gehr, the whole record should go in, and that charges should not be made on one or two pages of the record.

(To Mr. Bruninga): Is that all?

Mr. Bruninga: That is all.

(Witness is shown drawing patent to Long, No. 1,489,499, dated April 8, 1924.)

(Narrative continued) I saw some pistons like that at Mr. Long's place of business, when I went to work there. I don't remember whether or not I made any pistons like that after I went to work with Mr. Long. I would not say how many of them I saw when I went to work for Mr. Long. A number of them were laying around there. I could not even express the number. There was not a hundred; I would say there was four or a dozen, but I saw several pistons around there that were slotted in that way, and some were slotted different. There were some of these pistons, like shown in the drawing of this patent, there when Mr. Weems took the business over. I don't think they were included in [fol. 405] the inventory, only just as scrap. The pistons very similar to that, is what we took out of the Mohrenstecher car. The slots I don't think were just exactly the same as they are there.

I never made any entries myself in these books, Exhibits V to V-7, that I testified about. There was none of those pistons in those books that referred to anything other than the six slot pistons. There is no reference in the books to one kind of piston, as distinguished from another kind. I am not testifying what kind of pistons those items mean, from my recollection; we were licensed, under Mr. E. C. Long's patent, for this particular design, and nothing else. There is nothing in these books to say what kind of piston it was, further than our agreement with Mr. Long, which—I have not got the agreement with me now—will state the design of the piston. The books don't say anything further than these were pistons we actually were to manufacture under the——

X Q. 151. I understand that. You argue from what you claim about that, that that is the only piston you made, and that is what the books mean?

A. Yes, sir.

X Q. 152. But that is not what I am asking you.

A. Well, we were not allowed to make anything else.

X Q. 153. People sometimes make things they are not allowed to make.

A. We couldn't, in this case, because our contract bound us to it.

(Narrative continued) I have no independent recollection of having seen any of these entries, regarding these pistons, made in any of these books. I couldn't point out any particular time that I seen one there.

Our agreement with Mr. Long licensed us to make pistons on any design he had made up to that time, but it doesn't allow us to make anything, and improvement that he may have done afterwards. I don't think we were licensed, under that agreement, to use any of his inventions and improvements in aluminum pistons, that he had made up to the time of the agreement. My recollection is that it was limited to this particular six slot design.

X Q. 158. But you would not be willing to say that it was not broad enough to cover such designs as shown in Patent No. 1,489,499, that I showed you?

A. Yes, it was.

X Q. 159. Well, now, you want to change your testimony. You said a minute ago that it was limited to the six slot [fol. 406] piston; now you say it was broad enough to cover——

A. I misunderstood the question, but we were confined to the six-slot piston; that was the object of making a drawing for every piston pattern that I had made.

X Q. 160. You say it was limited to the six slot piston?

A. That is right.

X Q. 161. And did not include anything such as shown in Patent No. 1,489,499? You could not have made that if you wanted to, under that agreement?

A. No, sir.

X Q. 162. Your license did not give you the right to do that?

A. No.

X Q. 163. You are certain of that?

A. I am certain of that.

X Q. 164. You would say that that agreement contained no such licensing clause as the following; "The party of the first part (that is, E. C. Long) grants unto party of the second part (that is, M. K. Weems) the right and license to make, use and sell for use in engines, automobiles, and motor vehicles, pistons embodying the invention and subject-matter of each and all patents now owned by him and of all patent applications now on file, whether allowed or not"? You say that agreement contained no such broad license clause as that?

A. That is all right; that is in the agreement all right, but afterwards he confined us to this particular piston.

X Q. 165. When did that take place, afterwards?

A. Well, that was immediately after the transaction was made.

X Q. 166. That is, you are trying to say there was another agreement that limited you to the six slot piston?

A. Well, I don't know whether it was a verbal agreement or whether it was a written agreement.

X Q. 167. But you say there was another agreement, in addition to the main agreement?

A. The agreement that Mr. Long and Mr. Weems and myself had at the time, that he would not allow me to make a pattern for a piston, without making a drawing, without sending it to him first. That was the object of these tracings that we have here.

X Q. 168. But you don't deny that what I read for you was in the original agreement?

A. No, I don't deny that.

Mr. Richey: That is all.

[fol. 407] Redirect examination.

By Mr. Bruninga:

(Narrative continued) I have an original of the Weems agreement, at Quincy. I knew about the agreement at the time it was made—the agreement was read over to me by Mr. Weems at the time.

I saw the agreement after it was signed, and I know Mr. Weems' signature. The agreement you have handed me (marked for identification "Defendants' Exhibit X") is the one about which I have been testifying, and that is Mr. Weems' signature. I will let Mr. Richey and yourself see my copy of the agreement, the original agreement, any time you want to see it.

Mr. Bruninga: With consent of counsel, I offer in evidence a photostat copy of that agreement, identified by the witness, as "Defendants' Exhibit X."

Mr. Richey: We make no objection to the introduction of a copy, if we can have access to the original, and can correct any errors that may be found in the copy.

Mr. Bruninga:

R. Q. 8. In Mr. Richey's cross-examination, with reference to the Mohrenstecher car and the pistons that you took out, he asked you a question whether it was not a double evil affair: Was there anything the matter with those pistons you took out?

(Narrative continued) There was nothing particular the matter with the pistons; it was mostly all the cylinders. Only one of the pistons in particular was scored. That was scored at the top of the piston. To my recollection, none of the skirts of those pistons were scored. I have seen good pistons get scored in automobiles, on account of something else than construction of the piston; lots of them. Lack of oil is the principal cause of scoring—and untrue cylinder walls.

Weems made no other pistons at all except the six slotted web Long pistons—not from the beginning of his business up to, I will say 1925, he handled a few solid type, such as used in the Reo cars.

When I stated that in 1920 Weems made one thousand pistons, that was from memory; that is just a guess. We slowed down in 1923, I think, more than anything else, from the lack of advertising, and then, we didn't get as much of the grinding from that time on as we got before. The result of it was we couldn't furnish the amount of pistons for that [fol. 408] work. I don't know whether there was any patent trouble, but I don't think so.

In 1920 Walker M. Levett made a piston casting that he shipped to any one and every one that wanted it. That piston was turned up and slotted afterwards. It was slotted with just one slot down the side, the extreme length of the skirt of the piston. I have seen some of those pistons, and know they were successful. They were not slotted singly, like one of the slots in Exhibit B; the slot extended from the lower ring land of the piston, the extreme length of the skirt. There was just one slot. That is all I remember about piston types in 1920. Those pistons was in continuous use right straight along up to the present time. We had nothing to do with any other piston in 1921, except that single slot skirt piston. As for 1922, we never had any further dealings with any other piston except the Long

type piston and the piston slotted with the single slot on the side. There was other pistons made, but we never had anything to do with those.

Outside of furnishing me with the original drawings, no one helped me to make Exhibit O. I put in the lines indicating the slots—the ribs connecting the side wall of the piston to the wrist-pin boss. That drawing was made to show that just by adding two ribs, adding the ribs extending from one piston wall to the other, the piston could be slotted in six slots and still stay together. That piston, Exhibit O, with the red line on it, was very similar to the piston that I saw when I came to Long. It was no different, further than different dimensions, was all. There were different cars.

I do not know William Venner, and have never talked to him that I know of. Nor have I talked to Mr. Stellman, nor to Mr. Long since I have been here. You never told me to talk to any one, but not to talk to any one. You did not tell me not to talk to these particular attorneys here. I don't know whether you told me not to talk to any parties who might be called as witnesses.

Mr. Mohrenstecher is in Quincy now. He is bedfast and has been for probably a year. He didn't bring the car over. They just brought the cylinders and the old pistons and rode to the place. I took them back.

As to the kind of piston Ford was using in 1920, 1921, and 1922; Ford never put in anything but cast iron pistons in the model T Ford. We sold Ford pistons. We sold Ford the pistons complete for one dollar and a quarter.

[fol. 409] When I came to Long in December, 1918, the six-slotted web piston I saw there at that time was identically the same as Exhibit F. The piston that I took out of Mohrenstecher's car—the inside of it—was identically the same as this drawing shows here, but this shows a U-slot on both sides of the piston. But the piston that was taken out had a U-slot on one side and a T-slot on the other side.

When Mr. McCoy and Mr. Watts came over to see me at Weems, in Quincy, they did not ask for any books. I was not in the habit of showing the books to visitors. They didn't ask to see the core boxes. They looked at the pistons that were in the machining process and that is what I thought they were interested in, was the process of machining. I was not particularly in the habit of showing all our

core boxes to visitors, in those days, but I had no secrets. When they would come along and ask me anything about those things, I would tell them.

(Witness' attention is called to the following statement in "Defendants' Exhibit X"):

"It is understood that the following named articles are reserved to the party of the first part and not included in this sale, to-wit: One oak filing case, one electric ceiling fan, one Underwood typewriter, one old-fashioned mahogany table, one Burrough's adding machine, one special metal core box for Franklin pistons; also, other core boxes and patterns, as follows; for my patent pistons: One core box and pattern for Packard cars; one core box and pattern for Holmes car; one core box and pattern for Northway Motor Company; one core box and pattern for Overland Company; one core box and pattern for Maxwell car; one other special core box for Franklin pistons, and one three horse power Fairbanks Morse Company electric motor."

Those particudar core boxes was the one we were making up here—"Defendants' Exhibit Q." We were making that core box at that time, and that particular core box, Exhibit Q, was reserved in this agreement. The core box and pattern for Packard cars was a similar type to the metal core box, Exhibit Q, but Packard dimensions, of the same construction. The core box and pattern for the Holmes car was also the same construction, as was the one for Northway Motor Company. The core box and pattern for the Overland Company was the same that you have [fol. 410] right there—the wooden pattern, Exhibit P. The one for Maxwell was also the same as Exhibit P. The special core box for the Franklin pistons was another experiment he was making at that time. I would not make an attempt to describe that, because I might be off on it. It is not included in any—I have that core box up there, but I would not attempt to describe it.

Mr. Bruninga: That is all.

Re-cross examination.

By Mr. Richey:

I don't know just what piston you have reference to, when you speak of the Levett piston. We got some of the

pistons Levett made around 1919 or 1920, that had a single slot in them, because the trade demanded them and we didn't make them in the six-slot pistons, and so we had some of those pistons shipped in to us. And then we sold them. We sold them only as re-sale pistons; we didn't machine those. We sold various pistons as resale pistons, but no other aluminum pistons. Regarding the clearance we gave these Levett pistons when we put them in a car, we went according to the Levett's engineer's instructions on that, and if I remember right, their usual clearance was about one one-thousandths of an inch. What I mean by that, one-thousandth in diameter to each inch diameter; like a piston would be three inches in diameter outside, we would naturally give it three thousandths clearance. That is, three thousandths on the diameter. The diameter of these Franklin pistons here is three and a quarter, and we gave them a clearance of about two and one half thousandths. The Franklin Company gave them a clearance of three.

We substituted a good many of these aluminum pistons for iron pistons. They are better than iron pistons for the reason that the piston is so much lighter. It makes the engine operate with less vibration, and you can say a lot of things, but that is one of them. One of the big advantages to an aluminum piston, in case you would—the piston fit a little close and it would score the cast iron piston, it would score in the center as well as the piston wall, and the aluminum piston might score the piston, but would not injure the cylinder wall. Another thing, it was a better conductor of heat; the heat would go through the whole piston instead of—the head of the piston would become red hot, when the skirt would be practically cold in the iron piston. Carbon would deposit on the head and underneath the head, too. [fol. 411] I have seen carbon under the head, that would be one-half inch thick. We didn't have that trouble with the aluminum pistons. That is all of the advantages of the aluminum piston over the iron, that I can think of right now.

I testified before that we relieved all of these aluminum pistons, that I made when I was with Long or Weems, around the wrist-pin holes. I also testified in the interference of Frank Jardine and Ferdinand Jehle v. Elmer C. Long, No. 56,161, at Detroit, Michigan.

R. X. 22. In that interference, did you not testify as follows:

"Q. 47. Will you tell us what you remember about this piston, speaking of the time when you were working for Mr. Long, in Quincy? A. While Mr. Long was at the Franklin factory—on his return— he gave me a blue-print of the Northway 8-cylinder motor—as to size. I took this print and changed it to our particular design, which is so constructed that the skirt of the piston is not round inside. In other words, the piston was larger through the wrist-pin hole than the thrust side of the piston. The object of this was to do away with relieving the piston. This I took to the pattern shop and had patterns made for it. Later the piston was sent to the W. M. Levett Company, of New York City, and there was a number of piston castings ordered—more than what we needed for the experiment. This was in case of a defective casting or if one was spoiled in making. The pistons were later machined and shipped out to the Northway factory."

I show you the printed record in that case, and ask if you did not testify like that.

(Narrative continued after witness examines printed record.)

Well, of course, on that particular piston—I have had that in mind all through this examination. It was only one of the pistons that we sent to the Northway factory. But I did testify that way. I don't remember what the date was that Mr. Long was at the Franklin factory. He went down there several times while I was working for him. He was at the factory several times, but I would not say it was one or two or a half dozen.

Mr. Long did not submit any other designs of pistons to me after he left Mr. Weems. He would come in and show [fol. 412] me other designs that he was working on, but I had nothing to do with those, except just to look at them. He was designing new types of pistons all the time.

Mr. Richey: That is all.

Re-direct examination.

By Mr. Bruninga.

Mr. Weems never made any of those Northway pistons about which I have just testified. He never made any of those pistons with the different thickness of piston wall. I couldn't relate back just what year it was that we bought

and resold those Levett pistons, but I should judge that it was—it might have been 1925 or 1926, when we got the first solid type Reo pistons. It was later than any of these books shown here. By "these books" I refer to the various Weems books that I have produced here.

Mr. Bruninga: That is all.
Mr. Richey: That is all.
Mr. Bruninga: Deposition closed.

It is Stipulated by and between counsel, that signature of the witness to the foregoing deposition is waived.

At this point a recess was taken until 1:30 o'clock P. M.

JAMES V. SAXTON, called as a witness on behalf of the Defendants, having been first duly cautioned and sworn, deposes and says as follows:

Direct examination:

My name is James V. Saxton, and I am 66 years old. I am staying temporarily at 1237 Chouteau Avenue, St. Louis, Mo., and at present am unemployed. I cannot give you the exact date when I started working with A. Gilbert & Sons Brass Foundry, but it was in April, 1916. I worked there up to the time they went into bankruptcy, November 17 or 18, 1931.

I originally worked in the Machine Shop, kept track of the finished stock, and kept track of the castings that were sent there to be finished, assembled them and delivered them to the Shipping Room. That was what I started on. Then they discharged the pattern clerk and put me in charge of the [fol. 413] pattern room. That was in August, 1917, about the middle of August, I think the 14th. I know it was along about the middle of August in 1917.

Gilbert was doing casting of all kinds of metal—brass, bronze, aluminum; making solder, copper castings, aluminum castings. I cannot say that Gilbert was casting aluminum when I went there; he was casting aluminum when I became pattern clerk, to the best of my recollection. When I left Gilbert's, I presume there were about 30,000 patterns in that place, scattered all over the place. That is an estimate, I am not positive of that.

I was the pattern clerk, from 1917 on, had sole charge and kept the records. (Witness' attention is called to pattern marked D8764.) I recognize this pattern; it was obtained at A. Gilbert & Sons Brass Foundry Company, 4015-17-19 Forest Park Boulevard, St. Louis, Missouri. I know what bin it came out of; I got it out of the bin on the day Mr. Fletcher and I went out there. It was recently—the day I came to see you and we went out—I can't recall just the exact date. It was last week, to the best of my recollection.

I recognize this photostat, Defendants' Exhibit GG, D8764. It is in my handwriting, and was made out by me. This paper corresponds with the pattern you just exhibited to me; I obtained that pattern last week at Gilbert's, out of a bin there.

(Mr. Bruninga offers in evidence "Defendants' Exhibits GG and GG1." Also calls witness' attention to a photostat marked Defendants' Exhibit HH and which bears Pattern No. A640.)

I made out this paper while I was pattern clerk. The various dates under "Dates Received" on Exhibit HH designate the dates they came into the pattern room. "Dates Returned" designate the date they were returned to the owner. I made those entries at the time the patterns were received and returned respectively.

(Witness' attention is called to pattern marked "A640," "Defendants' Exhibit HH1.")

I recognize this pattern as one I obtained from A. Gilbert & Sons Brass Foundry Co. I found it in bin 398, last week. I cannot state positively the date. It came from the same bin as Exhibit GG1, and I got it at the same time. Pattern HH1 corresponds to the pattern noted on HH.

[fol. 414] (Mr. Bruninga offers in evidence "Defendants' Exhibits HH and HH1." Also calls witness' attention to the photostat marked for identification, "Defendants' Exhibit II," and bearing pattern number B122.)

I made out this paper while I was pattern clerk at Gilbert's. The two patterns marked "B122," Defendants' Exhibits II1 and II2, which you call to my attention, were obtained by me at A. Gilbert & Sons Brass Foundry Com-

pany, out of bin 398, last week. The two patterns, Exhibits III and II2 correspond to pattern No. B122, or Exhibit II.

(Mr. Bruninga offers in evidence "Defendants' Exhibits II, III and II2.")

I made the sketches on Defendants' Exhibits GG, HH and II, when I got the patterns the first time. The dates under "Dates Received" signifies the time I received them in the pattern room, and "Date Returned" signifies the date I returned them to the owner. The "2" with the ditto mark immediately under "Date Returned" signifies that they were made at A. Gilbert & Sons Brass Foundry Company, and they are duplicates of the owner's original pattern—exact duplicates.

On Exhibit GG, "1 wood—C. B." signifies that one wood pattern and one wood core box were returned that day. On Exhibit HH, "1 wood—1 C. B." signifies one wood pattern and one wood core box owner's pattern and core box, were returned. Under "Date Received" of "2-22-19" on Exhibit HH, "4 wood—1 C. B." means there were 4 wood patterns and one wood core box received on that date here (indicating).

On Exhibit II under the date of 2-22-19, "1 wood—C. B." designates one wood pattern and one core box received. Under date of 3-21-19, "1 wood—C. B." designates one wood pattern and one wood core box returned to owner.

(Witness' attention is called to paper, marked for identification, "Defendants' Exhibit JJ" and marked "Pattern No. H4.")

I made this sketch the date it was received, October 10, 1919. Under "Special Identification," "1 wood" designates one wood pattern and one core box. That includes a core box; it is marked under "number of core boxes." I do not know where that pattern is now. The date 1-28-20 indicates the date it went back.

[fol. 415] Witness' attention is called to paper marked for identification, "Defendants' Exhibit KK," bearing pattern No. C123.)

I made out this paper while I was a clerk at Gilbert's, and I made the sketch on it. "1 wood" indicates one wood pattern and one core box. The core box is designated under "number of core boxes." "4 wood—1 C. B." designates 4

wood patterns and one core box. "1 wood—1 C. B. 3-21-19" designates 1 wood pattern and 1 wood core box returned.

(Mr. Bruninga offers in evidence "Defendants' Exhibits JJ and KK.")

I made the drawings on Exhibits GG, HH, II, JJ and KK from the owner's pattern. I also made out the card marked Defendants' Exhibit LL. The number under the pattern number is B640. The designation on the card "Use pattern A640 as per instructions on core box" refers to, use this core box for pattern A640. Regarding the relation that A640 pattern has to Defendants' Exhibit HH1, that is the core box they constructed for use on pattern A640.

Exhibit LL bears the date under "Date Returned" of "3-21-19"; that designates that core box was returned to the owner on the date. The card was obtained from A. Gilbert & Sons Brass Foundry Company, but I do not know who obtained it; I did not take it from the files.

(Mr. Bruninga offers in evidence "Defendants' Exhibit LL," and hands witness a card marked "Defendants' Exhibit MM," which bears the pattern number A641.)

I made out that card, and it refers to one pattern and one core box. I do not know what "Andy Watson, 1104 Chemical Bldg." refers to; it is not in my handwriting. The date "4-8-19" on Exhibit MM refers to the date the pattern and core box were received.

The designation "E. C. Long Mfg. Co." on Exhibits GG, HH, II, JJ, KK, LL and MM, refers to the firm owning the patterns. I have met Mr. E. C. Long. I know I met him once at the time of the transactions of these various Exhibits that I have testified to. I can't recall the exact date, but it was a number of years ago. It was in connection with those patterns I have talked about, and he came into the pattern room and wanted them cast as soon as possible.

[fol. 416] Mr. Richey: I object to the part of the answer that says what Mr. Long wanted as being incompetent.

(Narrative continued) I don't recollect ever seeing a core box like Defendants' Exhibit P, which bears a plate on the back marked "0.13." I could not say positively that I have never seen that particular core box before. I can't say whether I recollect seeing a core box of that construction

before, nor could I say how many patterns went through my hands from 1916 to 1931; there were thousands of them.

The core boxes that are referred to in the various Exhibits GG to MM inclusive, have been returned to the owners of the patterns. I do not know where they are.

Direct examination closed.

Cross examination.

By Mr. McCoy:

Referring again to Exhibit HH, one pattern was received from the owner and one received from the pattern room—Gilbert's pattern room. I can tell whether the pattern came from the owner or from Gilbert's pattern room. This one is Mr. Gilbert's (witness indicates word "Gilbert" as a special identification). This card indicates that on January 16, 1919 there was one of these patterns returned to the owners. Four wood were returned on March 21, 1919. The card indicates that the Gilbert pattern was left with the foundry and remained with the Gilbert Company after March 21, 1919. As to my independent recollection of the character of that pattern: The Gilbert pattern is a duplicate of the original pattern—an exact duplicate in every respect.

I do not know what the core box looked like that was originally received by Gilbert. I also do not know what the core boxes were like that were received as I have testified as indicated on Exhibits II, JJ, GG, KK, and have no independent recollection of the nature of the core boxes about which I have testified in connection with Exhibits LL and MM.

(Witness is asked to examine Exhibits HH to MM, inclusive, and tell which of the various patterns and core boxes indicated in these Exhibits remained with the Gilbert Company, and which are indicated as returned to the E. C. Long Company, or the party supplying the pattern.)

[fol. 417] E640 was returned by Gilbert; that is Exhibit HH. E122, Exhibit II, two wood, retained by Gilbert; H4, there was no duplicate made on that. JJ was returned; D8764, Exhibit GG, one wood pattern retained by Gilbert—their pattern; C123, Exhibit KK, one wood and one core

box returned February 6, 1919. There were four wood (I can't tell that date) four wood and one core box returned, March 21, 1919.

Referring now to Exhibit LL, the card indicates that that core box, No. B640, was returned to E. C. Long. That is the date the core box was returned—March 21, 1919. Regarding MM, that pattern was returned, but the card does not show what date it was returned. I know it was returned because it was not in the bin when I cleaned out the bin out there.

Since the time of its receipt on January 29, 1919, pattern D8764 has been in the possession of A. Gilbert & Sons Brass Foundry Co. The last time I saw that pattern prior to the time I located it last week for Mr. Bruninga, was at the time the castings were made and when I put the pattern away. I can identify this particular pattern, Exhibit GG1, as the particular pattern I saw at that time, because I made these numbers with an embossing machine, numbered and marked on here (indicating). That is my painting. I put that on Gilbert's pattern so there would not be any possible chance that this pattern would be returned to Long.

I don't know who obtained those cards about which I have been testifying this morning, but Mr. Fletcher inquired of me about these patterns last week, to the best of my recollection, when he and I went to the Foundry. I had not examined those patterns during the intervening time from 1919 and the other day when I looked at them.

Mr. Richey: You agree that that was Herbert G. Fletcher, who was attorney in the Long Interferences?

Mr. Bruninga: Yes.

(Narrative continued) These various patterns were used for making piston castings. I know enough about the foundry business to know that they were used for that. I recall using those particular patterns for making piston castings. That was on the card, at the time of receipt. That is not a deduction from what I see on the card; that is my recollection for the reason that we received those [fol. 418] patterns from Long with an order. My orders came from the office and usually the patterns were received with the orders and I got the order and marked up the casting card, stated how many castings were ordered, such

and such aluminum, and pattern number on it, and the casting card, designated how many patterns and how many core boxes.

I did not make any of those patterns myself; the pattern maker made them. These records indicate what the patterns were used for. Insofar as the pattern record cards show, there is nothing to show they were used for making piston castings. All they do is make a cylindrical hole in the sand. It could be used for anything that would require that type of cylindrical casting cavity.

I was not asked to make any search for exhibits of this nature prior to the time that Mr. Fletcher inquired of me, a week or so ago. The first time I saw Mr. Fletcher he called me up; I can't just recall the exact date now. I have a little memorandum in my pocket he called up down there where I stay, and I did not put any date on it. I just put, Fletcher, 302 Title Guaranty Building. I can't state positively how long ago that was; it might be a week and it might be a little over a week. It is recently. That is the first time I ever saw Mr. Fletcher, to the best of my recollection.

I do not remember your coming to me and asking me for these pattern cards several years ago. I do not recollect getting out any cards for parties who inquired for them regarding the E. C. Long matter several years ago.

The cards shown in Exhibits HH, II, JJ, GG and KK came from the A. Gilbert & Sons Brass Foundry Company. I know because I recognize my handwriting and drawing. That is the only way I can tell, however. I may have got the cards out that are shown in Exhibits HH, II, JJ, GG and KK, but I don't recollect getting them out. However, I would not have removed the cards unless I had orders from the office, from Charles F. Gilbert, the President. I don't recollect Mr. Gilbert's asking me to get the cards out. He may have done so.

I can't say why the remaining cards LL and MM were not produced at the time of the production of Exhibits HH, II, JJ, GG and KK. To the best of my knowledge and belief, cards LL and MM came from A. Gilbert & Sons Brass Foundry Company, but I don't know who got them, or when they came from there. I recognize the cards that [fol. 419] remain in my handwriting—that's my handwriting (indicating). I don't recollect ever getting those cards,

HH, II, JJ, GG and KK, out of the company records. I have no recollection of taking those cards out, but it is just possible that I did. I can't recall it now.

Cross-examination closed.

Redirect examination.

I placed the word "Gilbert" on Exhibit GG1, and the words "Gilbert Patt." on Exhibits HH1, II1 and II2. They designate made and owned by A. Gilbert & Sons Brass Foundry Company. I found those patterns in bin 398 and at the time I was out there with Mr. Fletcher. I knew without consulting any records what bin I could find them in from memory.

I know what a pattern for a piston looks like.

R. D. Q. 9. Do Exhibits GG1, HH1 and II2 look like piston patterns?

Mr. Richey: I object to that as calling for a conclusion and as being immaterial.

(Narrative continued) The yellow painted parts on these patterns are core prints.

Redirect examination closed.

Recross-examination.

By Mr. McCoy:

Regarding my search with Mr. Fletcher for these records, when I got out there they had a man in charge of the place and he did not seem to know anything about these patterns and I knew that some patterns made for Long, which belonged to Gilbert were still out there, then Mr. Gilbert himself came and I asked him if we could go in there. I also asked a young man who was in charge of the place under the Trustee whether I could go in there and look for patterns. He said yes, you can go in and I went direct to the bin where they were stored and I took my man from the floor, and Gilbert says, yes, those are the patterns, if Mr. Fletcher wants them give them to him, he did not care about them any more. Mr. Fletcher and I took them down town to his office then. There were none in that bin when we got there that belonged to Mr. Long but we produced all the patterns that were made for Mr. Long—all that we

could find in that bin. We did not search any other bins; I had no recollection of any other bins.

[fol. 420] That bin would contain all of the patterns that were made for Mr. Long by Gilbert Company in 1919, but there were patterns belonging to other people put in that bin since that time and there would not be sufficient room to put in all the patterns that we ever received from Mr. Long. I don't think the bin would have been big enough. It may have been at that time. They were crowded for room out there and there were more patterns coming in than going out and they were crowded and I put patterns in whatever bin I could find any space for them—in any bin that had sufficient room. Yet I did not search any of these other bins for patterns at the time I was out with Mr. Fletcher.

Recross-examination closed.

Mr. Bruninga: Counsel understands that Mr. McCoy has the originals of Defendants' Exhibits GG, HH, II and KK and he is requested to produce same.

Mr. Richey: In answer to that, we will say we will produce them if we have them. We would have had them here today had we been notified in time to bring them along.

Mr. Bruninga: I did not know that Mr. McCoy had these originals or I would have asked him to produce the same.

Deposition closed.

Deposition of CHARLES F. GILBERT, taken in behalf of defendants, by consent of the parties, at 4069 Park Avenue, St. Louis, Missouri, on the thirteenth day of May, 1932.

CHARLES F. GILBERT, a witness of lawful age, being duly produced, sworn and examined, testified in behalf of the defendants, as follows:

Direct examination.

I am Charles F. Gilbert, of St. Louis. I am 54 years old, and in the brass foundry business. We are a company at present, Gilbert Brass Foundry Company. Formerly, it was A. Gilbert & Sons Brass Foundry Company. Our present company is located at 4069 Park Avenue; the A. Gilbert & Sons Brass Company was located at 4017 Forest

Park Boulevard. It was in that location from 1907 up until [fol. 421] the present time. It is liquidating now; it has not finished. It is a trusteeship, and was a corporation. I was President and Treasurer of that Company. I would say I still have relations with that Company, until it is completely liquidated. I have no control over the assets of that Company; it is in the trustee's hands. Karl Korngold is the trustee, and it went into trusteeship on November 19th, 1931.

I have none of the records of that Company, the A. Gilbert & Sons Brass Foundry Company, that I know of. The records of the old Company are in Karl Korngold's hands. I had access to them as long as the—just prior to the time at which we moved everything, which we purchased; not now, I have not. To the best of my recollection, I think I made a search of the records of that Company, with reference to transactions with Elmer C. Long, in 1926 or 1927. I am not sure just exactly what year it was. I made that search for Mr. Fletcher. I don't remember whether I made any for Mr. McCoy or not. His face is very familiar. Probably I did.

Mr. Richey: We agree that he did, and also it is agreed that Mr. Fletcher is Harbert G. Fletcher, attorney for Mr. Long, in those interferences.

Mr. Bruninga: That is right.

(Narrative continued) James B. Saxon was our pattern clerk in that Company, beginning, I would say, from along about in 1912 to 1931. He was with us up until we went into receivership—into trusteeship. He had charge of the pattern records and pattern room.

(Witness is handed photostats, "Defendants' Exhibits GG, HH, II, JJ and KK.")

The handwriting on these records is James Saxon's, and this is a photostat of a pattern record of the A. Gilbert & Sons Brass Foundry Company. I don't know whether I got them from Mr. McCoy or whether I got them from Mr. Fletcher or Mr. Long; I am not sure which. It has been some time ago. But I got them from one of them. I got the originals out of the records of the Gilbert Company.

(Witness' attention is called to "Defendants' Exhibit LL.")

I recognize that as a pattern record of C. E. Long, or E. C. Long, and it came from the pattern record of the A. Gilbert & Sons Brass Foundry Company. I took it out of [fol. 422] the records two or three weeks ago, and gave it to Mr. Fletcher.

(Witness' attention called to "Exhibit MM.")

This record I also took out of the records of the Gilbert Company and gave to Mr. Fletcher. I have not examined the records of the Gilbert Company to find any additional records of transactions with Long or with Mr. Long's Company, because that was all the card records that was left, and all the books are in the care of the trustee. I never had any access to the books.

I would say there probably are additional records. I don't know where you would be able to locate them now. I have searched for them, in the last couple of weeks. We had them in 1926, and I searched for them at that time. Exhibits GG to KK, inclusive, were turned over to them at that time. To the best of my recollection, that is all I could find at that time.

I should say that the books of the Gilbert Company, that show the names of the employees from 1916 to 19— have been destroyed. We never kept those records after five years. That is my best thought right now. I would say the records from 1914 to 1922, were destroyed; I haven't any. I do not know of any other records relating to the Long transactions with the Gilbert Company, unless the records—ledger sheets that have been transferred could be located, which are now in the hands of the trustee. I don't know where he has got them. As to the records dating back from 1916 to 1920, I would say they are all gone.

The location of the office of the A. Gilbert & Sons Brass Foundry Company was 4019 Forest Park Boulevard. It was there in 1926; prior to 1918 it was in a flat at 4019 Forest Park Boulevard, in a different building. It was a flat with the number of 4019 Forest Park Boulevard, up until 1918 or 1919, when we tore it down and built offices and moved our office to the second floor, that is, 4019 Forest Park Boulevard. The office was in the former location from about 1912 to 1917. After 1917, the flats were demolished and a new building was built, and the office was located in the second floor, 4019 Forest Park Boulevard.

I knew Elmer C. Long at that time. It has been a few

years since I have seen him. When I first met him he was located in Hannibal, and later in Quincy. I saw him both at Hannibal and Quincy. I called on him and solicited his trade in both places.

[fol. 423] When I called on him in Hannibal he was running a machine shop and making automobile parts. He was working on an aluminum piston at that time. The record here will show the type; the same thing—the same line as these records GG to KK show here, with exception of changing the core box from time to time.

I saw the pattern of the piston he was making when I saw Long in Hannibal; pattern and core box. The core box was a wood box, solid pattern, which was for the piston casting, which left ribs in the casting to strengthen it—left ribs on the inside of the casting. I don't recall how many ribs there were.

I can't describe that core box more fully other than that it had ribs in it, that is, it was made in such a way that it would leave the inside of the piston casting with ribs, which would leave a hub for the piston pin to work in, and ribs to strengthen it on the sides. The ribs couldn't be fastened on, because they had to be loose in there.

Mr. Richey: The answer is incompetent, a conclusion of the witness, and argument.

Mr. Bruninga:

Q. 76. You saw that core box, did you not?

A. Yes, I did.

Q. 77. Did you see the parts in the core box, that made the ribs?

A. I did.

Q. 79. Give me a complete description of the core box.

A. In the making of a casting of that character, in order to core it or make it hollow, leaving those ribs in there, the ribs in the core box would have to be loose within the core box, so they could be withdrawn before the core is put together.

Mr. Richey: I want to object to it. I object to the answer as the witness' conclusion, and argument.

Mr. Bruninga:

Q. 80. What Mr. Richey wants to know is not what you think it ought to have, but what you actually saw that it did have.

A. Well, it did have. It couldn't be otherwise.

Mr. Richey: Same objection.

(Narrative continued:) I was familiar, at that time, with the core for an ordinary trunk piston. Such a core for a trunk piston had provisions for that kind of ribs, extending [fol. 424] across from each side of the core box. The piston casting, as made from the pattern of the core box furnished us by Long, left a hub in the upper portion, in the upper one-half, the solid end one-half, where the piston pin works in, and four ribs probably dropping down to about the same distance or a little further than the hub of the piston. Those ribs run from the inside of the piston wall to the piston hub, crosswise of the piston; no, not crosswise; it would be lengthwise in a piston. Those ribs connect with the hubs, and they extended from the hubs to the inside of the wall of the piston, to the skirt and head, both, as I remember it. It was attached to the head of the piston and to the sides of the piston.

We cast pistons for Long of that construction. I don't think it was prior to the time that I saw him in Hannibal. I think the time I made connection with Long was the first visit I made on him in Hannibal. That was along about 1912. We fooled around making piston castings from 1912 up until, I think, around 1919 or 1920.

Q. 94. Aluminum pistons?

Mr. Richey: I object to that question as leading.

A. Aluminum pistons.

Mr. Bruninga:

Q. 95. Did your company make any—cast any iron at all?
A. None whatever.
Q. 96. What did you cast?
A. Aluminum, brass, bronze.
Q. 97. You saw pistons at Long's the first time you went over there?

Mr. Richey: That is objected to as leading.

(Narrative continued:) Not that I remember. What I saw was a pattern. That is my recollection. I did see some of Long's pistons complete. Just exactly when I couldn't say, because after he machined them up and experimented

with them, if I remember correctly, at one time he was making them for the Franklin Automobile Company, and he brought some of the pistons back that we had made; whether it was for—I think it was due to excessive wear on them at that time—and wanted to know if we couldn't make a different composition of aluminum that would stand up better in service and we—if my memory serves me right, at that time were experimenting with a metal which we developed afterwards, called aluminite, and from which we made some piston castings for Mr. Long and they gave much better service; that is to the best of my recollection. I prefer to keep the composition of that aluminite secret. We were using standard No. 12 at that time, in the original castings. No. 12 was supposed to run approximately ninety-two aluminum and eight of copper. [fol. 425]

I stated that the best of my recollection was around 1912 that I first made piston castings for Mr. Long. Those pistons were for automobiles, and their construction was as described a few minutes ago, in the testimony—the ones with the ribs.

The year before the United States entered the war, the Gilbert Company was doing just a general brass foundry business. They did not work on munitions prior to the entrance of our country in the war. We did make aluminum piston castings for Mr. Long before the United States entered the war; from 1912 to 1917. We made them off and on, two and three times a month. They were of an experimental nature; nothing in the way of production. There were a half dozen or so at a time. This was on a credit basis, from the very beginning.

Up to a couple of weeks ago there were patterns for the Long pistons in the Gilbert Company place. I know because I went down and looked over the records and found two or three of them. I don't remember what bin it was. The card record, which was turned over to Mr. Fletcher, will show that. Those two cards were all that were turned over to Mr. Fletcher.

I saw those piston patterns myself before Mr. Fletcher took them out. There was someone with him, that located them—a pattern clerk, Fred Eyerkuss. Yes, Mr. James B. Saxon was there. He came there with Mr. Fletcher.

I think I would recognize the patterns. (Witness' attention is called to "Defendants' Exhibits GG-1, HH-1, II-1, and JJ-2".) Those are the patterns that were turned over

to Fletcher. They were obtained from the Gilbert Company's place on Forest Park Boulevard, about two weeks ago. I have seen those patterns before; quite a few years ago. They are patterns for piston castings.

The yellow part on the end of these is the core print—the core box goes with that core print. Core boxes of that time were not located. I don't know where they are. They were the type core box which sand is packed in, that hollows [fol. 426] out the inside of the pattern or casting, to make it hollow. I don't remember particularly a core box for Exhibit GG-1; I remember that all of them had a core box with them. A core box, as I have stated, with the core print on the pattern coincides or fits the core box and the core is made in such a way that sand, when inserted, can drop down into the core print on the pattern, and when the casting is cast it leaves the casting hollow; and those core boxes had ribs on the inside, with also a lug where the—which formed a hub. I think there was one hub, or wings extending out from the hub, which made four divisions in the casting.

There is one hub in a piston, and it is used as a drill, to insert the piston pin. I would say the hub is located about one-third the way down from the top, at the closed end of the piston; in the center, from wall to wall.

(Witness' attention is called to "Defendants' Exhibit P.")

I have seen this core box before; as to whether there has been use made of it in any—whether we made any use of it or not I couldn't say just now.

Q. 141. What relation does that core box, Exhibit P, have to Exhibit GG-1, if any?

A. The core box which makes the core, that you make the core in, and hollows out the pattern.

Mr. Richey: I object to the answer as incompetent.

(Narrative continued:) I have been in this foundry business thirty-one years. I think I know a little bit about it; considerable about it. I absolutely was able to answer the last question.

Q. 146. What is the relation of the core print, of Exhibit GG-1, and the core box, Exhibit P?

Mr. Richey: That is objected to as incompetent.

A. The core print is a guide to insert the core in the mold and hold it in place.

Mr. Bruninga:

Q. 147. Do they fit or don't they fit?
A. They do fit.
Q. 148. One is made for the other, is not that right?

Mr. Richey: That is objected to as incompetent.

A. One is made for the other.

[fol. 427] (Narrative continued) We have recently made cores with Exhibit P, in this place. We made some yesterday, to make a casting from the pattern; this pattern here (indicating). We have some of those castings—Exhibit GG-1—on the floor right now; we can produce one of those castings. Here is one of the castings made from the pattern (producing casting).

This is the core box, Exhibit P. That casting was made this morning, in this place.

Mr. Bruninga: I offer in evidence this casting as "Defendants' Exhibit NN."

Mr. Richey: We object to it as immaterial. It does not matter what can be done today by using different core boxes or patterns or things of that kind.

Mr. Bruninga:

Q. 160. From your experience, would you say that Exhibit P was designed as a core box for the pattern, Exhibit GG-1?
A. I would say it was.
Q. 161. How often would it happen that the core prints would correspond, if they had not been designed deliberately for one another?
A. It would be a miracle if they did.

Mr. Richey: That is objected to as a guess of the witness.

(Narrative continued) The diameter of the core print bears no relation to the casting, as far as design is concerned. The depth of the core print bears no relation to the casting, but it does to the pattern to which it was made. The core print on the core box has to correspond

to the core print on the pattern, that is, the core box has to correspond to the core print on the pattern. Usually, the man that makes the pattern makes them correspond.

Comparing Exhibit P with the Long core box which I previously described, it is identically as I described it in the other statement regarding the core box and patterns. I first saw a core box like the one exhibited here, or similar to it, back in 1912, in Mr. Long's place and at our foundry on Forest Park Boulevard, afterwards, when Mr. Long sent us a pattern down to have castings made from them. Mr. Long sent one core box with the pattern, but in his experimenting, while the pattern always remained the same, he was continually changing the core box on the inside. The change was in the way the ribs were inserted, the number of ribs. I was referring to the removable ribs [fol. 428] P-1 and P-2 when I made the statement about the core box, changing the ribs on the inside.

I don't think I could enumerate some of those changes, other than the core box came down to us with ribs in one way, and after he got the castings and experimented with them, they were not exactly what he wanted and he changed them and had other castings made. As to what changes he made in them I don't know. The fact of the matter is, that I never paid that much attention to it, further than to make the castings for him.

If these pieces were taken out and the holes filled up, that core box would be the same as an ordinary trunk piston, except it would not have any ribs on the inside. I saw a core box similar to this core box, at Long's place in Hannibal, in 1912. It had some ribs in it; whether the ribs were inserted just as they are there or not, I can't say. I couldn't say how early I saw a core box with ribs arranged like in Exhibit P, because I don't remember just exactly when I first saw the ones with the ribs cross-wise, like that. I know it was before the United States entered the war.

The Gilbert Company made no die castings at that time, all sand castings. I say, no die castings; I experimented for years with die castings, but I have never done anything commercially with it.

That number, 0.13, is a number that was placed on there by our pattern clerk with a machine that we had for making such a number by zinc strips. From all indica-

tions, that strip was made at the Gilbert Company, because that is the way we numbered all our patterns; that is the kind of strip that was used. It was made by a machine especially built for embossing those letters on strips of zinc.

I know that a core box like Exhibit P was used at the Gilbert Company to make aluminum pistons, before the United States entered the war, for Mr. Long. As I say, we started to do business with Mr. Long about in 1912 and experimented with him on pistons from then on until '19.

We made five castings like Exhibit NN, here. We also have a core that was made with that core box; Mr. Fletcher has it.

Q. 191. Do you know whether any trouble was encountered in the making of that piston, Exhibit NN, with the pattern, GG-1, and the core box, Exhibit P?

Mr. Richey: I object to the question as asking for the conclusion of the witness.

[fol. 429] A. None whatever.

Mr. Bruninga: Direct examination closed.

Cross-examination.

By Mr. Richey:

I think this Exhibit P, the parts there were in my shop prior to 1930. I am not positive; to the best of my recollection it was. From evidence of the pattern number on it, I would say it was just like it is here—parts and all. That would include these two removable parts (indicating on Exhibit P); otherwise the core box would not be complete. To the best of my knowledge, those two removable parts, P-1 and P-2, were in my place prior to 1930; to the best of my memory it was.

I said Mr. Long came in from time to time, in getting these castings made, in an experimental way; he was continuously changing his patterns, all the time we were making castings for him. The patterns remained just as they were; the core box was changed. There was no necessity for changing the pattern. The core box he changed from time to time. He some—took the core box that he had used in making one piston and modified it and had another

one made. He was constantly putting the ribs in, in different positions and different shapes.

X Q. 14. You testified before, in these interferences, did you not?

A. I think I did, yes.

Mr. Richey: Mr. Bruninga, you will agree that he testified in Interferences Nos. 49,569, 49,570 and 49,571?

Mr. Bruninga: Yes.

Mr. Richey:

X Q. 15. Before you testified in those cases, Mr. Fletcher talked to you, Mr. Long talked to you, Mr. McCoy talked to you, and I, F. O. Richey, talked to you?

A. Yes.

X Q. 16. And we all asked you at that time to give us your earliest dates on these pistons of Long's, did we not?

A. I am not sure whether you did or not, now.

X Q. 17. Some of us did?

A. I presume so.

X Q. 18. Mr. Fletcher and Mr. Long were asking you for the earliest dates that you had made any of these castings; that is correct, isn't it?

A. As to its correctness, I couldn't say. To the best of my recollection, those questions were asked with reference to that.

X Q. 19. And you were also asked by one or the other of those parties to search your records, to find records of [fol. 430] the earliest date of making any of these piston castings for Long; that is correct, isn't it?

A. I think so.

X Q. 20. And you did make searches for such records, or had them made?

A. I had them made.

X Q. 21. You didn't make them yourself?

A. No.

X Q. 22. Whom did you have make them?

A. Jim Saxon.

X Q. 23. He searched, and then brought in to you the earliest records that he could find?

A. He did.

X Q. 24. Did not Mr. Fletcher at that time, or Mr. Long, ask you when you first made piston castings for Mr. Long?

A. They probably did; I don't know. If my testimony shows it there, he did.

X Q. 25. In that case you testified as follows, did you not?

"Q. Did your company ever make any piston castings for E. C. Long or the E. C. Long Manufacturing Company?

A. We did.

Q. What is the earliest date at which your Company made piston castings for E. C. Long or the E. C. Long Manufacturing Company?

A. October 10th, 1919.

Q. In giving this date you have referred to some cards, haven't you?

A. I have.

Q. What are these cards?

A. Pattern record cards.

Q. Of your company?

A. Of our company."

Later, it was shown that instead of October 10, 1919, that was October 10, 1918; that is right?

Mr. McCoy: October 16, 1918.

Mr. Richey:

X Q. 26. Then you were asked as follows:

"X Q. 34. Is it possible there are other record cards referring to the patterns received from E. C. Long or the company he represented, other than the record cards you handed to opposing counsel?

A. None whatever, other than the records you have.

X Q. 35. But isn't it possible that you may have overlooked some?

A. No."

Now, you so testified, did you not?

A. According to that record, yes.

X Q. 27. You did so testify?

A. Yes, I testified.

X Q. 28. The records that you had in mind at that time, when you said there were not any others, were these records GG to KK, inclusive?

A. Whatever they are.

[fol. 431] X Q. 29. Those records were given to us after the search you had made?

A. I presume they were.

X Q. 30. That is a fact?

A. A search had to be made for them in order to give them to you.

X Q. 31. Now, in the same interference you testified on behalf of Mr. Long, and were examined by this same Mr. Fletcher; that is correct, isn't it?

A. I think so.

X Q. 32. In this interference, when you were examined by Mr. Fletcher, you were asked the following questions:

"Q. Do you recall whether about the year 1914, or prior thereto, that you made pistons for Mr. Long?

"A. To the best of my memory, it was around that period, around 1913 or 1914."

That was the way you testified, was it?

A. I think it was.

X Q. 33. Did not Mr. Fletcher ask you, before he placed you on the witness-stand, what kind of pistons you made for Mr. Long in 1913 or 1914?

A. I think he visited our place and asked—visited Mr. Long, and Mr. Long told him where he got the pistons made, and he came out and asked. He came out and asked us if we made aluminum pistons for Mr. Long, and I told him we did.

(Narrative continued) I don't remember whether I described the pistons to him or not, or whether I showed him the patterns and core box. I may have done both. I don't remember whether he asked me, on the witness-stand, what kind of pistons those were. Possibly I did tell Mr. Long, when he asked me to tell them what kind of piston I made for Mr. Long in 1913 and 1914, that I didn't remember. I couldn't say when I last talked to Mr. Long about this piston matter. Possibly the last time I talked with Mr. Long was at the hearing; along back in there. I don't remember whether that was around 1925 or 1926. I think it was in connection with these interferences.

I would hate to estimate how many different kinds of castings my company manufactured between 1910 and 1925. Many thousands. I believe I could mention any name—I

believe I could come pretty near describing the class of castings and the character of castings which I have made for customers, back from the time I started. That is thirty-one years ago. Every year there were a good many hundred, if not a good many thousand, castings under my observation, and I can even call pattern numbers for you, mechanical electric——

[fol. 432] X Q. 43. I didn't ask you for that. Pardon me, but we just want evidence that is competent in the case.

Mr. Richey: That is all.

Re-direct examination.

By Mr. Bruninga:

I have no interest whatever in this proceeding. I know what it is about. I know it is a suit pertaining to an aluminum piston—from Mr. Long and Mr. Fletcher, representing him. What the suit is about now, whether it is Mr. Long's suit, or some one else's, I don't know. In those interferences that Mr. Richey called my attention to, and I gave a date, for instance, of October, 1918, I gave them from the records. I understood I was giving it from records when I answered. The record was produced. I would say our pattern clerk made a good search of the records at that time, because I instructed him to do so. I thought the search had been made. I did not know that these two cards, Exhibits LL and MM, were in existence at that time, because I didn't know there were still any left in the files. When I personally looked, I found them.

I have spent my life in my business—thirty-one—thirty-two years. I started the business of the Gilbert Brass Company. I started it in March of 1900, and I would say that I keep close track of it.

Mr. Bruninga: That is all.

It is stipulated by and between counsel, that signature of the witness to the foregoing deposition is waived.

Deposition of Sidney D. Royalty, taken in behalf of defendants, pursuant to the annexed notice, in Room No. 1 Morrison Block, Jacksonville, Illinois, on the twelfth day of May, 1932.

SIDNEY D. ROYALTY, a witness of lawful age, being duly produced, sworn and examined, testified in behalf of defendants, as follows:

Direct examination.

By Mr. Bruninga:

I am Sidney D. Royalty, of 231 Pine Street, Jacksonville, Illinois. I am in the automobile service business, and handle Franklin, principally. I have been in Jacksonville, this last time, since May, 1923. I am fifty-four years old. In 1910 I was working for Mr. Elmer C. Long, in Hannibal, [fol. 433] Missouri, selling automobiles and doing a little service work. Mr. Long was handling Maxwell automobiles at that time.

I was with Mr. Long for about a year, then I moved to Barry, Illinois, about twenty miles from Hannibal, where I went into the hardware and implement business. I was in Barry until the fall of 1916, then I moved to Quincy, Illinois, where I worked for the Electric Wheel Company, until February of 1918. On February 15, 1918, I went to work for Mr. Elmer C. Long again. I don't know of any particular way that reminds me to fix that date; of course, I had to notify the Wheel Company several days before I left them, and I just remember distinctly that it was in February, the middle of the month.

At that time, Mr. Long's place was at the corner of Twentieth and Main Street in Quincy. Later in the summer he moved to Eleventh and Main Street. I worked for him until the fall of 1919, when he sold out to Mr. Weems, and moved away.

I continued with Mr. Weems, and I think I worked for Mr. Weems until the latter part of April, 1921. Then I came here to Jacksonville, and worked for Mr. C. N. Priest, who was handling Franklin automobiles. I did service work for Mr. Priest, the same as I did with Mr. Weems; Franklin service work.

I was with Mr. Priest until about March of the next year, then I moved back to Quincy and had a little shop of my own,

during that balance of that year, 1922. The first part of January, 1923, I went to California and stayed there until the first of May, 1923, and came back to Jacksonville. I have been here ever since. When I went back to Quincy, I had a little independent Franklin Service station of my own. When I went to Barry, Illinois, in 1911, I used to come to see Mr. Long, in Hannibal. I think it was in 1913—1912 or 1913, I began to handle cars under Mr. Long, with a sort of sub-dealer's contract, and I used to see him about that.

I handled the Moon and the Oakland, through Mr. Long, and naturally I would have a little business with him whenever I would go to Hannibal.

Mr. Weems was making pistons, principally, when I was with him; aluminum pistons. They were called the Long piston; the piston designed or patented by Mr. Long. I first saw a piston designed by Mr. Long, about the year 1913, as well as I remember. While he was in Hannibal, I saw some pistons that Mr. Long had designed. I was in [fol. 434] Barry, at that time, and that happened about two years after I came to Barry, as near as I remember; that was before I left Barry.

The first piston I remember was a cast iron piston. The construction I remember mostly was slots in the piston. It had a slot resembling the letter T, on one side, and on the other side there was a letter U inverted, and this U had a slot running from the lower part of the skirt, almost half way up the skirt of the piston. That was a trunk piston with wrist-pin bearings; it was a solid—the skirt was in one piece, except for these slots. Those slots were located, with reference to the wrist-pin bearings, between them, between the wrist-pin bearings. I believe I could make a sketch of the piston I saw in 1913.

Mr. Bruninga: The sketch made by the witness is marked for identification "Defendants' Exhibit DD." I will mark on the sketch, above the first figure to the left, "Fig. 1," and on the next figure to the right, I will mark "Fig. 2."

(Narrative continued) Part "a" in that piston was the slot T; it was cut clear through the skirt wall. Part "b" in Fig. 1 is the head of the letter T; that, too, went all the way through the skirt wall. The slot, a, the best I remember, ran to the end of the skirt. I wouldn't be positive about it.

The heavy parts, c, represent the wrist-pin bosses. Line, d, represents the ring groove section. In Fig. 2, e represents a wrist-pin boss; f, represents a ring groove section; and g represents the inverted letter U. They went all the way through the skirt. I think they went all the way to the end of the skirt, but I am not positive. It has been a long time since I have seen that piston. It is a little detail that I wouldn't be sure about.

The part, h, represents the bottom part of the letter U, inverted. Part, i, represents the slot in the skirt, inside of the letter U. That went all the way through the skirt.

To prevent g and i from dropping out, there was webs on the inside, that supported the parts that were slotted. I could make a sketch to show those webs. (After making sketch, marked Fig. 3.) That is as well as I remember those webs.

In Fig. 3, part J represents the web in the inside of the piston. Part k, is a wrist-pin boss and l represents a ring groove section. I think there were two of the webs, j; one on either side. They were connected with the piston by be- [fol. 435] ing fastened to the sides of the skirt. I don't remember whether they extended up into the head of the piston or not. They were cast on, and were also cast on to the wrist-pin bosses.

Mr. Bruninga: I offer in evidence "Defendants' Exhibit DD."

(Narrative continued) The piston as shown on Exhibit DD was shown to me by Mr. Elmer C. Long in 1913, as well as I remember. I was living in Barry at that time.

When I came to work for Mr. Long in February, 1918 Charles Chadwick was not working there. I think he came late in the Fall of that same year. I think it was before the first of the next year, 1919, but I wouldn't be positive.

My first work I did for Long, for probably four or five months, was just to take care of the sales room and cars—doing little light servicing of any cars that might come in. We had no regular shop at that time. After he moved over to the Eleventh and Main place, I took care of all the servicing on cars. Sometimes, when I was not busy on service work, I helped back in the machine shop. I did very little machine shop work.

I saw some pistons at Long's place, after we moved to Eleventh and Main; they were the slotted type, aluminum

pistons. I don't remember seeing any pistons until he moved to Eleventh and Main, where he had his shop. That was right after he moved. He moved them from Quincy. It seems he was making these pistons in Hannibal, and when he left there he brought pistons from the shop in Hannibal to Quincy.

Mr. Richey: I object to testimony about what he seemed to do in Hannibal, as hearsay.

Mr. Bruninga: Q. 88. Do you know anything about what he was doing in Hannibal at that time?

(Narrative continued) He was working on the pistons. I remember when I was there—during the years that I was in Barry, when I would be over there, at one time he showed me an aluminum piston that he was working on. I never went to Hannibal after I started to work for Mr. Long in Quincy, to see what he was doing there. I don't remember of being down there until he started to move. I went down there and helped him move from Hannibal. It was probably four or five months after I came to work for Mr. Long in [fol. 436] February, 1918, that I helped him move from Hannibal to Quincy. That was when he bought this shop at Eleventh and Main, that he moved his shop from Hannibal to this place at Eleventh and Main. We moved some pistons from Hannibal to Quincy at that time.

I saw the pistons, and remember in particular that there was one aluminum slotted type piston. It was not like Exhibit DD; it was slotted different from that. The slots ran from the bottom of the skirt up to the lower ring groove, almost to the lower ring groove. The head of the piston had a slot on each side from the wrist-pin boss, from one wrist-pin boss around to the other. These slots in the skirt ran from the bottom of the skirt up to this slot that went around the head of the piston. I don't remember the number of slots, the number of perpendicular slots. I can make a sketch of what I saw. (Witness makes sketch, which is marked "Defendants' Exhibit EE," with a figure designated as Fig. 1.)

Mr. Bruninga:

Q. 100. Under Fig. 2 I wish you would sketch a cross-section of that piston at right angles to the wrist-pin bosses.

(Witness makes sketch as requested.)

(Narrative continued) In Fig. 1, the part 1 represents the slot that runs from the bottom of the skirt up to the slot at the head of the skirt. Part, 2, is the wall of the skirt. Part 3, is the slot in the center of the skirt, and part, 4, is the slot that separates the head from the skirt.

The slots 1, 3 and 4 went through the skirt wall. Part 5, represents a wrist-pin boss, and part 6, is the part of the wall of the piston in which the wrist-pin bosses is located. The line, 7, in Fig. 1; the wall of the piston on the side where the wrist-pin boss was cut away and that line, 7, is the lower part of that relief. That was cut away to keep the piston from sticking when the head came on it.

Lines, 8, represent ring grooves. Part 9, in Fig. 2 represents the web inside of the piston, to support the parts of the skirt that were cut away. Part 10, represents a wrist pin boss. Part 11, is the lower part of the ring groove section, and parts 12, represents the slots on either side of the wrist-pin boss.

There were two webs, 9, on each side of the piston, extending across the wrist-pin boss—to the skirt, in either side; [fol. 437] right across the wrist-pin boss, and extended to the skirt on either side, and there was two of these webs, one on each side of the piston. They were cast altogether. When the piston was cast this web was part of the original casting. It was cast on to the skirt and on to the wrist-pin boss.

I saw such a piston like Exhibit EE, when I moved from Long's place in Hannibal to Long's place in Quincy—an aluminum piston. The first piston I saw I don't think had been used; it didn't have that appearance.

Mr. Bruninga: I offer in evidence "Defendants' Exhibit EE."

(Narrative continued) When I saw the piston like Exhibit DD, which I said was in 1913, Ed Cotter was there at the time. He was also there when I saw Exhibit EE. He was a machinist.

I don't remember how many pistons like EE were moved from Hannibal to Quincy, but there was more than one. Long's place in Hannibal was near Tenth and Broadway. After Long moved to Eleventh and Main in Quincy, he started to make pistons. I remember he made some of this type here, which I have just made a sketch of; Exhibit

EE. Then, later, he made some that were a little different in regard to slots. One, in particular, that I remember, the head was cut away entirely from the skirt and there was a web run from the head of the piston inside down across the wrist-pin bosses, and extended to the skirt on either side, to support the part that was cut away.

(Witness is asked to make a cross-section at right angles to Fig. 2 of Exhibit EE, on the sheet handed him, which will be marked for identification, "Defendants' Exhibit FF." Fig. 3. After making sketch.) It was something like that. It might not look exactly like it.

In Fig. 3, parts 13, represents slots on either side of the wrist-pin boss. Part 14, is the slot at the top of the skirt that separates the head of the piston from the skirt —that went all the way around the piston. Slots, 13 and 14, went all the way through the skirt. Parts, 15, represent the ring groove. Part 16, is a wrist-pin boss, and 17 is the web that extends from the head of the skirt inside down over the wrist-pin boss and to the walls of the skirt on either side. There was one web, 17, on either side. I don't remember whether there were more or not. Two webs in all.

[fol. 438] Fig. 3 is the same general view as Fig. 2. It looks at the piston the same way. I can, under Fig. 4, show a view of that piston looking to the left, towards Fig. 3; a view of the outside of the piston. (Witness makes sketch.)

That view, Fig. 4, is really looking in the same direction as Fig. 3, down on it. Line 16 represents a wrist-pin boss and line 17 is the lower part of the relief around the wrist-pin boss. Lines 18 represent slots on either side of the wrist-pin boss, and 20 is the slot at the head of the skirt, that separates the head of the piston from the skirt.

The piston shown in Figs. 3 and 4, Exhibit FF, was being made at Long's place after he moved his stuff from Hannibal to Quincy. That piston had six vertical slots. Only two are shown in Fig. 4; there were two on the other side and then one on each side, in the center of the skirt. That would come about where the edge of the skirt shows at the line 21, and there was one on the other side in the same position, at the line 22. That piston was being made some time during the early Fall—I don't remember the month—of 1918.

As well as I remember, it was before Charles Chadwick came. That was an aluminum piston. Some of those went into service on the Franklin cars. I put some of the type piston shown in Exhibit FF, in Franklin cars. I don't remember whether that was before or after Charles Chadwick came.

The first pistons I saw of those, were sand cast. I had a set of them in my shop; I junked them a few months ago, of that particular type of piston, that were sand cast. I sold them to a junk man. They were taken out of a Franklin car, series 9, with six pistons. The pistons were in good condition. They showed that they had been used. They were not broken in any way. I don't remember what car they came out of, now. I probably junked it. I junked a number of those old model Franklins in the last few years. I couldn't say how they got in that car.

This Defendants' Exhibit F is the same type of piston that we used there in Quincy. I think this is sand cast. I wouldn't be positive; I don't know enough about those castings to say.

(Mr. Bruninga offers in evidence "Defendants' Exhibit FF.")

[fol. 439] The purpose of the depressed part opposite the wrist-pin bearings, in Exhibit F, is to allow more room for expansion when the heat comes on the piston, so the piston won't bind against the cylinder walls.

Exhibit F is the same type as the piston I saw in Hannibal before Mr. Long moved to Quincy, but I wouldn't be sure whether it is the identical type or not. Its construction is very much like it. Comparing Exhibit F with the piston that Long was making in Quincy, after he moved from Hannibal, as well as I remember, it is the same type of piston as he made there in Quincy. As far as the outside construction is concerned, I think Long made identically that type, in Quincy; but I wouldn't be positive about the webs inside. Those webs extending from the head down to the wrist-pin boss there, that I don't remember about. It has been a long time since I have seen any of that type piston.

The cross-webs in Exhibit F are the same as those Mr. Long used, I know. Those are the same as he used there in different types of pistons. The number of slots are the

same; the relief on the wrist-pin boss is the same; also the slot extending all the way around.

Defendants' Exhibit R is the same type of piston as Exhibit F. Exhibit F is for a Franklin car. Exhibit R looks like an Oldsmobile size. I wouldn't be positive.

Long made pistons for a lot of different cars—Packard, Oldsmobile, Ford, Franklin, Studebaker—while he was still in Quincy. He made a number of different pistons for different cars. Before he moved away from Quincy. And they were of the type of Exhibits F and R, as far as the slots and webs were concerned. Some of them were shipped out, before Long left Quincy. I don't remember the names of any particular ones we shipped to, before Long left Quincy. We shipped pistons to the Franklin dealer at Peoria, Illinois; we shipped pistons to South Bend, Indiana; to St. Louis, Missouri, and some place in Michigan, but I don't remember the name now; those were aluminum pistons.

They were made in Mr. Long's shop there in Quincy, that is, they were machined there. The castings, most of them he got from Mr. Levett, I think, some place in New York. I believe he got some castings from Gilbert in St. Louis.

Mr. Richey: I object to the answer as just a speculation.

[fol. 440] (Narrative continued) We did conduct some tests on pistons of the character of "Defendants' Exhibits F and R"—no, we didn't run any test on the smaller pistons; just the Franklin size was all we made any tests on—like Exhibit F.

The first test that I made was in 1918. We made tests before and we made tests after Mr. Chadwick came. I don't remember any particular test before Chadwick came.

There were different clearances used in those tests. Sometimes they would put them in with just clearance enough to be able to place them in the cylinder. I remember installing one set of pistons in Mr. Charles Bartlett's car, that had a clearance of one and one-half thousandths for the complete set. I brought that order in myself, after the pistons were installed, and it gave perfect satisfaction.

Mr. Richey: I object to the last statement as a conclusion.

(Narrative continued) I don't remember whether I examined the pistons after the test. There was no signs of sticking or laboring, or anything, while being used. I per-

sonally drove the car for ten days or two weeks, I think it was, after the pistons were installed. I did not find any binding. I can tell from experience whether a piston is working satisfactorily, while I am driving a car, and those pistons sure did work to my satisfaction.

That "Defendants' Exhibit V" is a book of inventory of the stock that Mr. Long had the time he sold out to Mr. Weems, and it is in my handwriting. I helped to take the inventory.

The notation "Inventory of E. C. Long, October 27, 1919 Machinery and Stock" is in my handwriting. Pages 28 and 29 are in my handwriting. I don't remember now if I took the inventory of the pistons noted on pages 28 and 29, but it is my handwriting. I don't remember the particular pistons noted on pages 28 and 29, or what construction they were. I wouldn't say whether or not any pistons like Exhibits F and R were in stock at that time. Those were the type that we were making, principally, all during the time that he was there, but I don't remember whether that is the type piston we inventoried or not. Long was making that type piston before that inventory was made.

(Defense Counsel offers in evidence "Defendants' Exhibit V.")

[fol. 441] It was right after that inventory was taken, that Mr. Weems took over the business. I don't know exactly. I think the deal had been made before the inventory was made. It couldn't have been over a month, I don't think. I continued to work for Mr. Weems, and he continued to make the same type of piston—like Exhibits F and R.

I recognize "Defendants' Exhibit E" as one of the latest types that Mr. Long made. It is the type that the Franklin Automobile Company adopted. Weems made some of those pistons while I was with him—he made a lot of them, while I was with him. After he took over the business he started production just as soon as he could get organized and get his help together; within three weeks after he took over the business.

I don't remember what the production was, but I know they were being shipped out and were being put into cars, within a few weeks after Weems took over the business.

I don't remember whether Weems advertised those pistons, as far as local advertising is concerned. He sent

out circulars to Franklin dealers over the country. I don't know how soon that was after he took over the business, but it was the same year that he bought Mr. Long out, and he shipped to Franklin dealers during that same year.

I didn't use many pistons like Exhibit F, after I came to Jacksonville. I never have used anything else only the Long type piston until this year, principally the Exhibit E. I bought some of them from Mr. Long, in Detroit, and bought the balance from Mr. Chadwick and Mr. Weems at Quincy. I found them satisfactory, but quit using them because Mr. Chadwick was not able to furnish them any more, neither was Mr. Long, and rather than send to the Franklin factory and wait for the shipment, I used some other type of piston. I used a Bohnalite, the type that is now being used in the Franklin automobile. I specified the Franklin car when I ordered the pistons, and that is what they sent me. That is a strut type piston. I haven't experienced any trouble with them, so far, but I don't believe I like them as well as the Long. I don't believe I can fit them as close as I can the Long piston. There is more tendency to slap, than the Long piston. The only place I know of now where you can get the Long piston, is from the Franklin factory, and I don't know whether I can get them there.

The first split skirt aluminum piston that I ever saw was the piston in Mr. Long's office in Hannibal, similar to [fol. 442] Exhibit F. I don't remember of seeing any other split pistons up to the time I came to Jacksonville, in 1923.

I never knew Edward J. Gulick, and he never offered to sell me a split piston. I heard of him in Mr. Long's, in 1926, when I was in Detroit. I never heard of him any other way that I remember now.

No one, except Chadwick, Weems, Long or the Franklin Company, offered me any split pistons, during the first year that I was in Jacksonville, 1923. Neither the Aluminum Company of America, nor the Cleveland Trust Company, ever offered me any. The only place I got them was from Long and Weems and Chadwick.

Weems was making these pistons like Exhibits F, E and R, during the first part of the year 1920. He made a good many of those Exhibit E, and they were being shipped out.

Miss Anna Landon was the head bookkeeper at Weems, when I was there.

I had not seen these particular pistons E, F and R, these particular ones, before this session—not that I know of. You did not show them to me, no.

Mr. Bruninga: Direct examination closed.

Cross-examination.

By Mr. Richey:

I didn't, myself, ship out any of these pistons from the Weems Company. I didn't have anything to do with the shipping. All I know about it is that somebody else told me that they were shipped out. I wouldn't attempt to say how many I saw shipped out. They had—I don't know how many it was. There was times there when I helped inspect the pistons and I know they had big stacks of them. How many pistons, I wouldn't attempt to say. By "big stacks" and "a good many," I mean probably a hundred pistons or more, at a time.

I didn't make any of these pistons myself, while I was with Weems. I don't know how many I saw made. I know they were shipping out a lot of pistons. I saw the boxes nailed up and go out. My service room was right beside the packing room. In some cases I saw them putting the pistons in the boxes.

I know that since around 1920, split skirt pistons have been standard equipment in a few automobiles. I don't know how many different cars. I know they are in the Franklin. I don't know what other cars they are standard equipment in, because my service work from 1918, up until the last year or two, was just on Franklin, alone. I wouldn't [fol. 443] be in a position to know who else made and sold aluminum pistons, then the people I have testified about, nor what cars used them.

I did see different types of aluminum pistons after that, until the last four or five years—like these pistons on the desk here. All the pistons that I remember seeing prior to the last four or five years had possibly one slot in the skirt. I don't remember what car that piston was in, nor do I remember when I saw it. I saw it at an automobile show in St. Louis, probably four or five years ago; I saw some pistons that were slotted with slots on only one side. I don't remember about the slots under the ring lands. My memory is not good enough to tell whether there were any more than

the one slot in it, what car it was in, and when it was that I saw it. I know it was four or five years ago.

I don't know whether the Bohnalite piston, like I bought recently for the Franklin car, has become standard equipment. I have seen Franklin cars lately, but I have had no occasion to examine into the pistons. I ordered those Bohnalite pistons through the local wholesale house from Central Automobile Equipment Company. I ordered pistons for a Franklin, Series 11. The order did not go to the Franklin Company; it went to the Company making this Bohnalite piston.

I said circulars were sent out from Quincy, but I didn't send out any. My work was in the shop, and they were sent out in the office. I know the circulars were there; I saw them. I saw the lists of names that they had, and saw them addressing envelopes. I am not positive as to who they sent them, or how many they sent out, but I know this, that they did send out some. I saw them folding them up and putting them in envelopes.

I was at Mr. Long's place in Detroit the first time I heard about Mr. Gulick. That was during the time I testified in these interference cases. Perhaps I talked to Mr. Long and Mr. Fletcher, the attorney, about the pistons I have testified to here; I don't remember now. I don't remember of any one else. That was in 1926, and I don't remember of going over any pistons until I came to testify. I don't remember whether I talked to Mr. Long or Mr. Fletcher about those pistons before I testified. That was six years ago.

Mr. Richey: It is agreed that Mr. Sidney D. Royalty testified in the Hartog-Long-Gulick Interferences Nos. 49569, 49570, 49571 in 1926.

[fol. 444] (Narrative continued) I don't remember now what I testified at that time. I don't remember testifying that since my first employment with Mr. Long I had seen three or four different kinds of slotted pistons of Mr. Long's. I did testify that since my first employment with Mr. Long I had seen three or four different kinds of slotted pistons of his. I also testified that during 1918 and 1919 three or four different types were brought to my attention. That is to say, during the years 1918 and 1919 and including the form shown in Exhibit 1, there were altogether perhaps four or five different kinds of piston shown me by Mr. Long. I so testified in that case. I also testified that I made a number

of tests on different sets of pistons, in that case. I also testified that I was not able to give any definite dates as to "when we tried any certain piston."

Mr. Richey: And when asked what were some of the changes made in these pistons, from test to test, you answered that that would be pretty hard to tell: That is correct, is it not? The entire question and answer were as follows:

"X Q. 61. What were some of the changes made in these pistons from test to test? A. That would be pretty hard to tell, just the different changes—I remember a few of them. In regard to the oil holes drilled in the wrist-pin boss, at first he used a very small drill to drill these holes, afterwards he used a larger drill. On Exhibit 1 at first we tested the piston without having any holes drilled below the ring groove on the wrist-pin boss sides, later we tried the same pistons with small holes drilled through the skirt. We also tried these pistons with skirts with different thicknesses. The ribs and also the webbing on the inside of the piston were changes slightly from time to time—that's about as well as I remember."

(Narrative continued) That is correct, and is my present recollection. I also testified that the other changes I did not remember, and that I didn't remember the order of these various tests; that I might test one type one week and then in a week or two come back with the same type with possibly a change or two made in it. That is my present recollection of it.

In this sketch I made, Exhibit DD, these webs ran straight across the piston, as well as I remember. In Fig. 2, the ends of the struts engage the inside of the skirt on either [fol. 445] side of the ring—wrist-pin boss, they extended right across the boss to the skirt, on either side. As to the part of the skirt they engaged, in Fig. 2, this diagram is not regular here. This is supposed to come across and engage this part here (indicating on diagram); between the vertical slots. Then they went straight over and engaged the other side of the skirt. This slot a, as near as I remember, was about in the center of the piston. This web here came in something like here (indicating on sketch).

Mr. Bruninga: Let him mark it in dotted lines, Mr. Richey.

(Witness marks on sketch. Narrative continued.)

In each case, the ends of the webs were near the vertical slots. I don't know just how to go about making a bottom view of the piston, looking down on it, on Exhibit DD.

X Q. 66. Just like you were looking into it, like that; looking right into the bottom of it; like you were looking down in a bucket.

A. It is one thing to look down in a bucket, and another thing to make a diagram of it.

X Q. 67. In other words, you are having difficulty in making the diagram?

A. Yes, sir.

X Q. 68. Although that is simpler than the other three diagrams you have made. You don't remember how it looked, looking down into the bottom of it?

A. Yes, I know how it looked.

X Q. 69. Can you or can you not make it?

Mr. Bruninga: The witness can take his time, if it takes an hour to do it.

Mr. Richey: I have no objection to his taking time, but he is not making any progress; just sitting and looking at the paper.

(Witness makes sketch, which Mr. Richey marks Fig. 4.)

X Q. 70. You don't show the webs in the same way you did in Fig. 3, do you?

A. I aimed to.

X Q. 71. That is not looking right down on the piston, into the bottom of it, is it, like I asked for? Can you make a view of the piston looking right into the bottom of it?

(Witness makes sketch.)

[fol. 446] X Q. 72. Where was the slot, A? Put a lead line there and mark it "a."

A. There is the slot, "a" (indicating on sketch).

X Q. 73. Would it be right there, you say?

A. Yes, sir.

X Q. 74. Now, where would the slot, i, be?

A. Over on this side.

X Q. 75. Where would the slots, g, be?

A. That is wrong.

X Q. 76. You have them wrong; you want to put them here (indicating)?

A. Yes.

X Q. 77. They would be outside, wouldn't they?

A. Yes, sir.

X Q. 78. First you put them on the inside of the struts and then you put them on the outside; that is correct, isn't it?

A. Yes; I didn't notice where the struts came there until I—I am not used to making diagrams.

X Q. 79. Now you have your slots a good deal wider apart in the last figure which you made, which I will mark "Fig. 5," than you have in Fig. 2, have you not? That is correct, isn't it?

A. Yes; the diagrams are not proportioned right. This boss should extend in here further.

X Q. 80. In Fig. 5, that should extend in further?

A. Yes, sir.

X Q. 81. And that would bring the struts in closer together?

A. Yes, sir.

(Narrative continued) That would bring the slots, g, in closer, and the ends of the struts on the slot, a, side of the piston, shown in Fig. 1, would be close to slot, a; they would be closer than shown in the last diagram. They would have to be close enough together to clear the slots, g—to be inside of the slots, g. If they were in that close, over close to the slot, a, they wouldn't be close enough to prevent those wings from flexing back and forth. I don't remember now how close they were, after nineteen years. I just know they were there and that is all. I am not used to making diagrams. The sketch DD shows my recollection of what I saw nineteen years ago. This view (indicating) comes nearest showing what I saw; Figs. 1 and 2; as far as the inside is concerned, I don't remember a lot about it, but I know the general principle of the inside.

X Q. 90. You don't remember the inside, but you are just deducing that from what you remember about the outside? [fol. 447] A. I know just about what the construction was inside, but I am not as familiar——

X Q. 91. You say you know it, but I am asking what you remember.

A. Yes, sir.

X Q. 92. Is it not a fact that you don't remember what the inside was, and you are deducing what that should have been from what you do remember about the outside?

Mr. Bruninga: Does the witness know what the word "deducing" means?

The Witness: I think so.

(Last previous question read to the witness.)

A. It is a fact that the inside is not as familiar to my memory as the outside.

Mr. Richey:

X Q. 93. It is pretty hard to remember these details for over nineteen years, isn't it?

A. Yes, it is.

X Q. 94. You testified in those interferences, in 1926, as follows:

"Q. What do you mean by the sides of the skirt? A. The web extended right across the wrist-pin bosses on either side, and straight across, as I remember, extended over to the side of the skirt of the piston. I haven't seen one of those pistons since Mr. Long left Quincy. It's pretty hard for any one to remember the exact detail of the construction."

You so testified, did you not?

A. Yes, sir.

X Q. 95. At that time, in 1926, you were testifying about a piston that you said you saw in 1918; that is correct, isn't it?

A. Yes, sir.

X Q. 96. And when you gave that testimony you had reference to eight years and now you are talking about nineteen years; that is correct, isn't it?

A. Yes, sir.

(Narrative continued) I don't remember only one or two pistons that I saw back there in 1913, like Exhibit DD. Mr. Long was working on a motor and that is the cast iron piston with the T-slot and U-slot in it, were the type he was using in that motor. I didn't see them in use in a motor and I don't know whether he used them in a motor or not, of my own knowledge.

I don't remember whether I saw one or two of them; I remember one distinctly. I don't remember whether that was the only one I saw; I would not be positive that I didn't [fol. 448] see more than one. I don't know whether he

patented this one I said I saw in 1913, or not. I don't know whether he patented any of them; I was not interested in that part of it. I also took his word for it that he designed them.

Mr. Long was in Detroit, Michigan, the last I knew of him. That was probably three or four months ago.

I junked a bunch of old Franklin pistons a few months ago; took them out of a car and junked them; but I don't remember whose car it was, nor where I got it. I just found those pistons in my shop; I don't know how long they had been there. They weren't in a car when I found them; they had been taken out of a car which I had junked—a number of these old type Franklins, in the last four or five years. I would not attempt to say where they came from. They had been there since I had started to work in the shop. What I meant to say was, that they had been taken out of a car after I started to work in the shop. I took them out of the car, myself, but I don't remember whose car it was, or where it came from. As I said before, I junked a number of these old Franklins. I don't remember what particular car these came out of, but the pistons that I had taken out, which is quite a number in the last nine years, had been thrown aside there, and when I began to gather them up I found one set of these old pistons.

In giving my employment I did forget to mention that at one time I worked for the Wells Fargo Express Company at Kansas City; I was there a few weeks.

Mr. Richey: That is all.

Redirect examination.

By Mr. Bruninga:

I am not a draftsman, and never took a course in drafting.

Mr. Bruninga: Deposition closed.

Mr. Bruninga: Now, I have a deposition of Mr. Stellman here, taken in St. Louis. It is a fact deposition, going to this same matter. Mr. Stellman is here, but as I understand Mr. Richey is perfectly agreeable to let me read that deposition of Mr. Stellman because he is going to be examined as an expert on the patent situation generally, after the deposi-

tion. I have no objection if the other side wants to cross examine on this fact testimony.

[fol. 449] The Master: You mean use the direct, not the cross?

Mr. Bruninga: We will read his entire deposition to the Court. If necessary Mr. Stellman could come in and read it himself, in order to save time.

Mr. Watts: As I understand it from Mr. Richey, we haven't any objection to raise on the ground the witness is here, therefore his deposition should not be used, so we are perfectly willing to go ahead with the deposition part if we may have the right to further cross examination.

The Master: Very well.

(Thereupon, adjournment was taken to 9:30 A. M. of the following Monday morning.)

(At 9:30 A. M., Monday, January 30, 1933, the hearing was resumed. Present: Messrs. Richey & McCoy for plaintiffs; and Messrs. Bruninga and Sutherland for defendants.)

(Reading of deposition of Mr. Louis M. Stellman continued from page 454 to page 466.)

Louis M. Stellman, a witness produced in behalf of Defendants, being duly sworn, testified as follows:

Direct examination.

By Mr. Bruninga:

My name is Louis M. Stellman; age 46; and I reside at Syracuse, New York. I am a consulting engineer, specializing in gasoline motors and automotive products. I studied mechanical engineering at the University of Michigan. I entered the employ of the H. H. Franklin Manufacturing Company, of Syracuse, July 1, 1909, as a student engineer, working in the mechanical laboratory. That company at that time was manufacturing automobiles with air-cooled engines. I severed my connections with the Franklin Company in June, 1924.

I worked through various departments of the Franklin Company between July 1, 1909 and June, 1924, in an engineering capacity. I finally became Chief Engineer in

May, 1920, I think it was, and was Chief Engineer when I left there. I was Assistant Chief Engineer before that.

The Franklin Company was manufacturing and marketing the model designated as Series 9-A during the years 1915 and 1916. As I remember, we started that model with [fol. 450] a cast iron piston in the year 1915, and then changed to an aluminum piston in 1916. The first aluminum piston was a trunk type piston, with a slotted lower end, although, I think, the first aluminum pistons we used were a plain trunk type piston. Afterwards we slotted the lower ends. That slotted piston, essentially, was a trunk type piston with slots running vertically in the piston skirt up to about the center line of the wrist-pin boss. Those slots were four in number, I think, and ran from the bottom toward the top of the piston, and were located on each side of the skirt. By "side of the skirt" I mean the side opposite the plane through the wrist pin boss. The piston marked "Defendants' Exhibit B" is the type of piston I have been trying to describe. It is the aluminum piston which Franklin used after this four side slot experience. I should judge that Exhibit B is a Franklin piston. (After measuring Exhibit B.) It is the same bore, the same diameter, as the Franklin piston, and is a Franklin piston of that period. Franklin started to use that type of piston in 1916, in production, and used it until October 27, 1920, I think. It was put out as part of the new car, in regular standard Franklin production. Prior to that time that particular type piston was not used for anything else.

The slots of that Exhibit B piston allowed the piston to be used with less trouble from piston slap and noises in the engine; piston noises in the engine.

Franklin used a piston of that particular construction, with four slots in it, later than 1916, and it was always used in production in just that form. In service we later incorporated a split ring in the bottom of this piston to expand the piston—help to expand the piston against the cylinder walls. At the Franklin factory the Service department that supplied the dealers with parts, was a separate organization from the organization that built new cars. The Service department supplied this split ring in pistons, and separate from the pistons, for dealers to install in pistons they already had. This ring fitted into a groove which was turned inside of the bottom of the skirt, this

groove holding the ring in the piston. This ring was a split ring, a good deal like a piston ring except it was made of steel, and was put in under different pressure.

There was a Franklin car, known as a Series 9-A, put on the market along in 1915. It was shown in New York in January, 1916, and in the Chicago show of that same year, [fol. 451] I think, the last of January, 1916. I attended that Chicago show.

I first met Elmer C. Long when he came to the Franklin factory in March, 1916, after the Chicago show. I heard of Mr. Long through one of our dealers who came to the factory after the show, Mr. Frank Sanders. At that meeting with Mr. Long in 1916 he showed me a piston of his design. It was essentially a trunk piston that differed from an ordinary trunk piston in that it had the skirt supported by two webs, which were in turn supported by the wrist-pin boss, and the piston skirt was divided, or separated, from the head of the piston by a circumferential groove, and it was also divided into pads by six slots running vertically from the bottom of the piston to the circumferential groove. This divided the piston skirt into four of these pads, each one of the pads being supported by this web, or by a web, which ran from the boss to the interior of the pad. Those pads were located on the sides of the piston parallel to the plane running through the center of the wrist pin boss. That top groove was located just below the lowest ring land, and it went all the way around the skirt. The Franklin Company adopted a piston of the type I have just described, in standard production on October 27, 1920. It was adopted in service in April, 1920. By that I mean that the Service department offered it to its dealers as a replacement proposition for pistons already in service at that time. Those pistons that the Service department furnished to dealers were sand cast aluminum alloy pistons. The first outstanding test of that piston by the Franklin Company before the adoption of it by the Service department, that I remember, was one that we made with Mr. Long, I made with Mr. Long, in which we put the pistons in a car, in an engine, and drove the car to New York, from New York up into New England, and back to Syracuse. That test was made in March, 1919. About that time, or a little after, the Franklin Company entered into an arrangement with Mr. Long.

Defendants' Exhibit F is what we call a Long type piston, suitable for use in a Franklin motor, and is a sand cast piston, I should say. That piston is similar in construction to the one that Mr. Long showed me in March, 1916. It might have been some different in the internal ribbing, but essentially that is the design. The internal ribbing that I have in mind would not affect the operation of the piston. [fol. 452] The photostat marked "Defendants' Exhibit Y" represents an ordinary trunk piston, I should think.

(Witness makes certain markings on Exhibit Y.)

"a" in Figs. 5 and 6 represents the top of the web. The groove is the same line running circumferentially around the piston, shown by this same line "a." It also designates the top of the groove. That groove ran all the way around the Long piston which he showed me in 1916, so that the skirt was separate from the head. The skirt was supported on the head by the webs "b" which were fastened to the wrist pin boss. The parts designated "c" are vertical slots in the skirt of the piston which went from the bottom to the circumferential groove just below the ring lands.

3 and 4 represent just the ordinary trunk piston. "d" represents a rib between the head and the wrist-pin boss. Fig. 1 is taking a side view of the piston and Fig. 5 is taking a section through the center line of the wrist-pin, to vertical section. The slots "c" and the webs "b" in these figures are reversed, which is a mistake in drawing of the No. 1 view. In Fig. 1 the slots should be shown as outside of the web. Fig. 5 is correct. Figs. 5 and 6 essentially represent the piston that was shown to me by Mr. Long in 1916. I carefully examined that piston at that time, because I was interested in a piston design, or any improved design for the Franklin car.

The construction, Exhibit B, was in use in March, 1916, but not in an entirely satisfactory use. I considered Exhibit B better than the ordinary unslotted trunk piston. As I remember it, that piston was supposed to run three thousandths at the bottom and nine at the top, that is, the top of the skirt. The clearances above the skirt are greater than that, between the ring land—the clearance between the ring lands was greater than nine thousandths. I do not know what became of the piston that Mr. Long showed me in March 1916.

Mr. William M. Venner was in the employ of the Franklin Company in 1916. He had been previously employed by the Franklin Company, I should say, for a number of years.

The Long pistons that were used in the test in March, 1919 were similar to Exhibit F. There were six pistons used in that test. On that particular test, I think we put them in at two thousandths clearance between the cylinder and piston on diameter, they being straight pistons—two [fol. 453] thousandths clearance all the way up the skirt through the circumferential groove. Those pistons were aluminum alloy, and were furnished direct to me by Mr. Long. The distance covered in that test was about nine hundred miles. In New England we encountered spring weather, but some snow and considerable mud. In New England we didn't have much concrete road. We went up there purposely to try the car out through heavy going and hard mud roads. I remember that on the way back we came up over the Mohawk Trail, which is rather a tough mountain grade, and we had, as I remember, several inches of snow on the ground. I personally made a report of that test, to the management of the company, which was an inter-departmental report. The two sheets of paper dated March 18, 1919, which you have just handed me, entitled, "Test on Long pistons" is the report of the test to which I have just referred. It has Mr. Murphy's initials, who was then Chief Engineer of the Company, up in the upper right-hand corner of the first page. The initials in the upper right-hand corner are in Mr. Murphy's handwriting. I dictated the report, soon after the trip, probably within a day or two after the trip. I have not recently entirely read that report.

(Witness reads report.)

That report refreshes my recollection as to what time the test was made.

Aluminum pistons, furnished by Mr. Long, similar to those shown in Exhibit F, were used in that test. I don't remember as that report describes the pistons in definite detail, but my recollection is that the internal ribbing was somewhat different from those in Exhibit F; that is, not so that it affected the performance of the piston in the motor. I think the slotting was the same; the webs that support the pads were the same; it had the same number of pads, and it had the same circumferential groove.

I examined those pistons after the test run, and I considered them very good. They showed no practical—they were in every way satisfactory.

I can positively identify this report of March 18, 1919, which is marked "Defendant Exhibit Z," as one made by me at that time.

Mr. Bruninga: I offer this report in evidence as "Defendants' Exhibit Z." I want to substitute a photostat.

[fol. 454] Mr. Richey: I have no objection to your substituting a photostatic copy of it for the original, on the same condition, that we may be permitted to see the original, and make any corrections that may occur.

(Narrative continued) The Franklin Company entered into a contract with Mr. Long after that test run, so that he was protected in connection with certain considerations, if and when the Franklin Company used a piston of that kind.

Mr. John Wilkinson was Vice-President of the H. H. Franklin Manufacturing Company, and I know his signature. The signature appearing on the Memorandum of Agreement dated March 20, 1919, between Elmer C. Long of Quincy, Illinois, and H. H. Franklin Manufacturing Company, and marked "Defendants' Exhibit AA," is Mr. Wilkinson's signature. I have not seen that particular agreement, but I have seen copies of it.

(After examining document) That is the agreement which I understood had been entered into between the Franklin Company and Mr. Long.

Mr. Bruninga: I offer in evidence "Defendants' Exhibit AA," and I should like to have counsel stipulate that I may substitute a photostat.

Mr. Richey: We agree that a photostat may be substituted for the original, subject to correction, if there are any errors, and with the understanding that we may see the original at any time we wish.

(Narrative continued) "Defendants' Exhibit 2" states "Several tests have been run in connection with this piston; the first being a set-up test on the block with baffle plates under the cylinders which did not give a sufficient amount of oil so but what a set-up obtained in about nine minutes." I remember that particular test. The piston used in that test was very similar in construction to the one used in the

test described. It was practically the same in construction as Exhibit F. That test was a difficult one; more difficult than would be employed in production—in a regular production piston at that time.

I can't remember definitely other tests of Exhibit Z. All I know, we were experimenting with the piston considerably between the time Mr. Long first showed it to us and the time of the test reported in Exhibit Z.

[fol. 455] I remember Mr. Gillett, of Chicago. He was a banker, a personal friend of Mr. Franklin. We built a Franklin car for Mr. Gillett's use in which we incorporated a set of pistons similar in design to those used in the test, the test called Exhibit Z. These pistons were installed in a motor in this car, and the car was shipped to Mr. Gillett for his personal use. I don't know that he knew that it had special pistons in it, but we considered these pistons were better than the pistons in regular production run of cars, and, therefore, we put a set in Mr. Gillett's car, because we liked to give him the best of anything that the Franklin Company had. This happened about two months after the report, Exhibit Z, was made.

The blue-print marked P-3984 of H. H. Franklin Manufacturing Company, marked for identification "Defendants' Exhibit BB" was obtained by me personally from the files of the Franklin Company just last Monday. That print represents an aluminum piston designed after—or, the principles incorporated in the piston shown in Exhibit F. I have no personal recollection of the making of that drawing. I cannot tell who made it, by looking at this print, but I could from the original. I have no personal recollection of when this drawing was made. Within a few weeks, possibly a month after the test, there were some pistons made like those illustrated in that drawing, and those pistons were sand cast and were given a test. The pistons operated satisfactorily in that test.

I understand that Mr. Long received royalties from Franklin, in accordance with the agreement Exhibit AA. However, I never saw the checks.

I recognize "Defendants' Exhibit C" as a copy of a Service Department bulletin as furnished by the H. H. Franklin Company. I personally received such bulletins in 1920. Those bulletins were dated on the day they were written, usually; then they were printed and sent out within the next day or two. This last item on that bulletin states

that on and "After April 15 the Service Department will be able to furnish Long Type Pistons in the standard size. These are straight pistons with two to three thousandths clearance. Their weight is approximately the same as the standard piston. While these pistons have not proved satisfactory in production, we find that they work out very well when used in slightly worn cylinders; cylinders that are not [fol. 456] worn more than .005 to .006 inch. If the cylinders are worn more than this they should be rebored. Long Type Pistons will be sold at the same price as the standard piston; viz, $8.50 list, complete with wrist pins, and rings, subject to the regular discount. Oversize, Long Type Pistons cannot be furnished."

Those Long Type Pistons were furnished by the Service Department on April 15, 1920, or soon after. No bulletins like that issued before the Franklin Company was ready to furnish pistons; that demonstrates to me that they had the pistons practically ready to ship to their dealers. I should say that the Franklin Company was ready to deliver pistons similar to type F, shown.

Q. 191. This bulletin, Exhibit C, bears the statement which you have previously quoted: "While these pistons have not proved satisfactory in production, we find that they work out very well when used in slightly worn cylinders"; have you anything to say about that?

Mr. Richey: I object to the question as too broad; it invites opinion, speculation, and hearsay.

Mr. Bruninga: I will ask this other question:

Q. 192. Can you say why those pistons had not proved satisfactory in production?

The Witness: We had trouble in getting the Long piston in production, because of the green condition of cylinders, as the pistons were started through the manufacturing test. These cylinders had a certain amount of roughness, inasmuch as it was a ground surface in the bore of the cylinder, and the grinding wheel would leave a fuzz, or, to a certain extent, rough surfaces on the cast iron. Those rough surfaces had a tendency to cause the piston to score in the cylinder, when it was first started up, and run in a production test. After April 15, 1920 they worked out in service very satisfactorily. The first pistons furnished by the Service Department were sand cast. Just before they put them in

production, a satisfactory die casting was received. There was trouble in getting satisfactory die castings. It was difficult to make that type of piston in a die casting, and we had some trouble in getting dimensions just as we wanted them in a piston casting.

Cars were actually shipped by October 27, 1920, with Long pistons incorporated in them. By "Long pistons" I mean pistons designed "similar" to those shown in Exhibit F, but of the die cast type.

[fol. 457] I recognize Exhibits E and G as die cast pistons that were used in the Franklin car.

I recognize "Defendants' Exhibit D" as a Service Department bulletin issued by the Franklin Automobile Company, similar ones of which were received by me at that time. This bulletin is dated November 11, 1920, and it specifically says that, "All Series 9 cars have been equipped with pistons made from this material and are giving satisfactory service."

I had nothing to do with the preparation of the bulletins, like Exhibits C and D, except that I may have furnished information in connection with them.

Die cast, Long type pistons, such as Exhibit E, were in production in Franklin cars on November 11, 1920. No sand cast pistons were used in what we considered regular production of Franklin cars, that is, in the Long type.

After doing experimental work on the particular design being tested, the Franklin Company oftentimes put through a certain number of specific designs through the regular production channels, to try them out as to their suitability for production work. Usually, this was done with some few cars before the product was put into regular standard production.

I think that twenty cars were put through with pistons similar to Exhibit E, before Exhibit D was issued; during the summer before that date.

Defendants' Exhibit H is another Service Department bulletin, dated April 18, 1922. It was issued probably within a day or two of the date that appears thereon.

Defendants' Exhibit I is another Service Department bulletin, issued under date of February 20, 1923, and was probably issued within a day or two of that date.

The Long type pistons, similar to Exhibit C, were being used in Franklin cars when I left in June, 1924. They were

used in, I should say, twenty-five to thirty-five thousand cars, up to that time, six pistons for each car.

The oval piston referred to in Defendants' Exhibit H was a trunk type piston, ground so that the section through the skirt would be of slightly oval shape, the large diameter being perpendicular with the wrist-pin. They were used in regular production for a time—as my memory goes, about in 1922—for a few months, but were discontinued because [fol. 458] of the fact that they did not give entire satisfaction. I don't think any royalty had to be paid on those oval pistons.

I never met Edward J. Gulick, of Elkhart, Indiana, I never saw one of his pistons in production. None of his pistons, that I know of, were offered to the Franklin Automobile Company, while I was there.

I don't think any split pistons were offered to us by the Aluminum Company of America, while I was with Franklin, prior to November, 1920. I don't think they were particularly interested in split pistons, prior to 1920.

Mr. Richey: I object to the last sentence as being a conclusion of the witness, and incompetent.

No split pistons, to my knowledge, were offered to the Franklin Company or to me as chief engineer, prior to November, 1920, by the Cleveland Trust Company, of Cleveland, Ohio. I have an idea that split pistons, if that means some portion of the skirt being slotted, were offered to us prior to November, 1920. I can't designate any particular person or company. I don't actually know of any split pistons being offered to us before that date (November 1920). There was a need for such a piston by the Franklin Company prior to November, 1920.

I should say that an air-cooled motor, such as used in the Franklin car, was a difficult motor to equip with suitable aluminum pistons. I did not know of any car which was more difficult to equip with aluminum pistons prior to November, 1920.

A straight aluminum alloy trunk piston without any splits in it would not work in a Franklin car, because you had to give it too much initial clearance. I remember we gave the bottom of the skirt five thousandths and the top nine thousandths, between the cylinder and the piston. The clearance given to Exhibit B pistons was three thousandths at the bottom and nine at the top of the skirt.

We gave the Long pistons four to five thousandths clearance, as I remember, all the way up the skirt, when we put them into production in 1920. I would say, then, that there was a crying demand for an aluminum alloy piston that would work with a minimum of clearance, in the Franklin car, before November, 1920. The Long piston supplied that want of the Franklin Company, the best of any at the time. [fol. 459] I have had occasion to examine other pistons on the market, even to date, and in my opinion the Long piston is still the best piston on the market for operation in automobiles.

I advised that the Long pistons be put in the Gillett car. I would not have put anything in Mr. Gillett's car, as an experimental car, in the sense that we wanted to try out anything that was not already proven satisfactory.

The Franklin Company did not essentially change the construction of the Long type piston from that illustrated by Exhibit G, during the period from April, 1920, to June, 1924. All of those pistons had six vertical slots, with a horizontal groove at the top, below the ring lands, and with webs extending from the wrist-pin bosses and going to the four pads, as in Exhibit G. They were relieved opposite the wrist-pin bosses. Pistons of that general design were furnished by the Service Department before July, 1920, but before November 1920 they were sand cast. They were not exactly like Exhibit G.

Exhibit F is apparently one of the sand cast pistons that was furnished by the Service Department during that time.

Mr. Bruninga: Take the witness.

Cross-examination.

By Mr. Richey:

When I went with the Franklin Company they were using an ordinary iron trunk type piston, and I think we used the iron piston until in 1916. I can't tell you in detail what changes we made in the iron piston during that period, but we changed models several times; I know we changed the size of the piston. I presume we changed the construction of it. The trouble with the iron piston was that it was too heavy, and was too poor a conductor of heat; I would say that was the fundamental difficulty with cast iron.

Mr. Bruninga: This line of examination is objected to as not very material, and as having no foundation in the direct.

Mr. Richey: The witness was asked about iron pistons.

Mr. Bruninga: None of the patents in suit is for an aluminum piston per se, or even a die cast aluminum piston, although the Aluminum Company of America wants to call that a permanent mold piston.

[fol. 460] Mr. Richey: The direct examination has not been concluded by the patents in suit, by any means.

(Narrative continued) It was known in 1909 and 1916 that aluminum was lighter and a better conductor of heat than iron, and, I presume, better material for pistons. I thought it was better material for pistons during that period. Another trouble with the iron piston was that, due to its poor conductivity of heat, it would run hotter and collect more carbon. The aluminum piston did not have that fault to as great a degree as the iron piston, probably because it was a better conductor of heat.

X Q. 14. And you know that from 1909 to 1916, did you not?

Mr. Bruninga: In order to avoid repetition, I should like to have it understood that my objection goes to this entire line of cross examination.

Mr. Richey: It is understood that the objection applies, without being repeated.

The Witness: I don't think, in 1909, the question of aluminum pistons had come up to any great extent, but some time during that time.

If we thought of the use of aluminum as a piston in a motor, we probably thought of the advantages of aluminum over iron. The faults of the iron piston, and the fact that the aluminum piston did not possess those faults, was generally known, I should think, in the automobile business in those years.

I think we gave the iron pistons two thousandths clearance, straight. That is the desirable clearance, approximately. The trouble with any greater clearance is that it pumps more oil and more gasoline, and it is noisy due to the slapping.

The Franklin Company were always working with pistons, to make a better iron piston, if they could, to overcome those disadvantages.

In the first part of 1916, I should say, the Franklin Company adopted a trunk type aluminum piston which was more or less a duplicate of the iron piston that they had been using previous to that,—it wasn't a duplicate but it resembled it. The clearance we gave this piston was five thousandths at the bottom of the skirt and nine thousandths at the top of the skirt—it tapered. Those pistons slapped more or less, and they pumped oil. There was not a serious objection to their pumping oil; probably they did with some; [fol. 461] all pistons do, some. The greater the clearance, the more they pump oil. We probably had some trouble with the pistons sticking in the cylinders and scoring, but the major trouble with them was noise, slap. We gave the aluminum pistons greater clearance, because aluminum expands faster under heat than iron, and we had to give that clearance to keep them from expanding up to the iron cylinder, and keep them from sticking or scoring. We used that trunk type aluminum piston until we went to the Long type piston.

We used the trunk type pistons without any splits in them for about a year to a year and a half, then we split them like Exhibit B, to allow equipping them with less clearance at the bottom of the skirt, to try to overcome slapping and noise. We improved the condition, but we still had some trouble with it. We used three thousandths clearance at the bottom of the skirt of that piston and nine at the top. We did not have so much trouble with those pistons sticking or scoring, but we had some; that is, not as much as with the trunk type. We modified that piston by putting an expansion ring in the bottom, but that was done principally in service, I should say, in 1917 or 1918. Then in 1920 we went to what we call the Long type of piston. That Long type piston had a clearance allowance of four to five thousandths all the way up the skirt. That piston did not slap or make a noise to any appreciable extent. I never saw an aluminum piston that didn't make some noise. That Long piston with four or five thousandths clearance did make a noise. Of course, if you ran it with two thousandths it would still further reduce it.

We tried out this oval piston in about 1922. I am not sure why we tried it out, but I think it was to get away from paying Mr. Long that royalty. This Long piston is, relatively speaking, an expensive piston to make. I heard

that the Franklin Company did discontinue the Long piston along about 1928, or somewhere along there.

I do not know of any other automobile company that adopted this Long piston as standard equipment.

Other types of aluminum pistons were adopted by other automobile manufacturers.

The companies who supplied the castings to other automobile manufacturers, were The Aluminum Company, Walker Levett, and the Bohn Aluminum and Brass Company. I don't know whether or not the Kant Skore Company of Cincinnati supplied any for production. I under- [fol. 462] stood they did supply them for replacement. I have seen those pistons that were supplied, after they were machined up. I know in general what they were like.

In general design, the pistons that were furnished by the Aluminum Company, Bohn and Kant Skore, to manufacturers, were like that shown in the drawing of the Maynard patent 1,655,968, in this suit, but I don't know that they were slotted like that. I know that that piston shown in the drawing, and commonly known as a split skirt piston in the industry, was used in quantities since around 1921. That is the piston that was machined from many of the castings that were furnished by the companies I have named, to the automobile manufacturers and replacement people, sometime during that time, and still is, as far as I know.

I do not know of anybody using this Long type piston now.

With reference to Exhibit Z, "Hartog v. Long v. Gulick Int. 49,572" and "Hartog v. Long Int. 49,581, Long Exhibit No. 3," I testified in those interferences about that report, on behalf of Long, in January, 1926, I think it was. At that time, when my attention was called to the fact that some of these views on Exhibit Y did not check with each other, I made a side remark that did not get on the record, "I am afraid I am getting rusty." I said that in apology for getting these drawings in disagreement with each other. I am even more rusty now than I was in 1926, when I testified in the interferences, with respect to my drawings, but not with respect to my r collection about these things. I don't think my memory is any better than it was in 1926, but my recollection is better now.

Our piston troubles in 1916 were greater than they were in 1919.

I came here from Syracuse, New York, just to testify in this case. I hope to be paid on a per diem basis, but I have made no arrangements about being paid. I charged fifty dollars per day in the aforementioned interferences, and I expect at least that much for testifying here.

I attended the Automobile Show in Chicago in 1916. I also attended automobile shows of other years, but I don't remember just what years. I did not attend them while I was with the Franklin Company, however.

I have seen Mr. Venner since I came to St. Louis on this trip, but I did not talk to him about this case. I just talked to him a minute and said "Hello," and "How are you?" and passed the time of day.

[fol. 463] Mr. Venner came to the Franklin factory more or less frequently while he was at South Bend. I saw him from time to time on those visits.

When Mr. Long showed me this piston in my office at the Franklin plant in Syracuse, in March, 1916 (probably about the middle of the month), there were probably others present besides Mr. Long and myself, but I don't remember definitely who. My office was in the engineering department on the second floor, about a block from the experimental laboratory which was on the ground floor. Mr. Long and I talked several different times about that piston while he was there, always in my office. I don't remember having any conversation about it at the door of the experimental laboratory, or anywhere outside of my office.

There was one rib in the top of that Long piston. I am certain that the slot was cut all the way around the top. If Mr. Chadwick, who went to work for Mr. Long in the latter part of 1918, testified that he and Mr. Long designed that slot all the way around in that piston, I would still say that this 1916 piston had a slot all the way around. The Exhibit Z report is not the only report that we had of a test of these Long pistons, but that is the most complete report as of that date. I know there were other reports at the Franklin Company in Syracuse, but this is the only one I have. Mr. Long furnished the copy of that report when I testified in the interferences in 1926.

The statement in Exhibit C, to the effect that at the date of that bulletin, April 8, 1920, the Long pistons had not proved satisfactory in production, is true. They worked better in slightly worn cylinders because of the fact that

the grinding glaze had been removed in the cylinder, due to previous contact with other pistons. I don't think it was because it gave some clearance, but simply that the surface was smooth.

The statement in Exhibit D, "The distinct advantage as a material for pistons which an aluminum alloy, with its very light weight and great ability to throw off heat, has over cast iron, is conceded by all automobile engineers" was a true statement at that date, and I should say that statement would hold true for a great number of years before 1920. The following statement from bulletin, Exhibit D, is also true:

"The Franklin engineers, however, realizing the particularly desirable features of the aluminum alloy piston, [fol. 464] have for the past three years been conducting exhaustive experiments with a view of securing a design that the undesirable features would be eliminated." This statement was made as of November 11, 1920. I also understood the following statement in Exhibit Z to be true: "Mr. Long, our dealer in Quincy, Illinois, was out here with a new design of aluminum piston for our motor in connection with which he has had four claims allowed by the Patent Office." I suppose Mr. Long told me that these four claims had been allowed on this new design of piston. When Mr. Long came to Syracuse in March, 1919, he didn't have any of these pistons with him, that I know of. I don't remember whether he brought any in March, 1919, but we had pistons there that we had been experimenting with, of this design. I think Mr. Long did bring some pistons like Exhibits E, F and G with him when he came to the plant in March, 1919—I can't tell just how many, but I think several sets. I don't remember whether or not he sent back home to have some more sent down at that time.

It was our custom to make reports of our tests, like Exhibit Z, within a day or two after the tests. The set-up test on a block with baffle plates under the cylinders, referred to in the report, was made, I should say, a few days previous to the report.

One of the troubles we had on production cars, which is referred to in Exhibit Z, was due to pre-ignition. Pre-ignition is caused by some action in the cylinder that causes the charge to combust before the time that the spark would ordinarily ignite the charge. The trouble referred to there,

I think, was in connection with some of the threads in the bottom spark-plug hole, below the point where the spark-plug came in this hole, becoming incandescent and causing it to ignite. I understand that that was sometimes caused by the top of the iron piston getting too hot. Aluminum pistons helped this condition.

Some time during the contract, I think, the royalties that Franklin paid Long on these pistons was ten cents a piston.

When Mr. Long showed me these pistons in March, 1919, he was there sometimes all over the plant, but principally in my office and in the experimental room and testing laboratory. Mr. Venner was there at the factory, I know, during the time of those conversations in 1919, but whether he was there when I was talking to Mr. Long, I don't know. [fol. 465] I presume I did have a conversation with Mr. Long about these pistons at the door of the experimental laboratory in March, 1919. I don't remember, but I presume Mr. Venner was present at one of those conversations; that would be natural, because we were testing them in the laboratory at that time. Those tests were made under my supervision. I don't remember the man's name, that actually made the tests.

My memory is better now than it was six years ago, when I testified for Mr. Long, because I have reviewed the facts in the case more recently than I did then. I talked with the men at the factory about them, Mr. Castor for one. He is not in the Franklin factory now, by the way. He is in Jordan, a town outside of Syracuse. I also talked with Mr. Chadwick, Mr. Davis, Mr. Burns, and one or two men in the sales department of Franklin. The Mr. Chadwick of whom I speak is Frank Chadwick, who has charge of the records at the factory. Any difference between my testimony now and that which I gave in 1926 would be due to what these people told me, and the records which I looked over.

I couldn't say that it is a fact that the first pistons of Long that were tested at the Franklin plant were tested on October 5, 1918. My examination of the records and the talk with Mr. Castor did not refresh my recollection on that point. I think we made a report, somewhere, to the effect that in the first test made in the laboratory there on Long pistons, two of the pistons froze after running ten minutes. If there was a report to that effect, that was the fact. By "froze" was meant they stuck in the cylinders.

I don't remember any tests made of the Long pistons prior to October 5, 1918. In my examination of the records of the Franklin plant since the last time I testified here I found some records of tests on Long pistons other than this Exhibit Z, but I don't remember the date of the first one. The majority of them were after this date of Exhibit Z, but I couldn't say whether or not all of them were. Those records are now in the Franklin plant. I didn't bring any of them with me because I was not asked to. I think I mentioned to Mr. Bruninga that I had examined those records before I came here. There is one record that has been submitted there, that I think is before that date, and that is that drawing (indicating Exhibit BB) dated May 8th, 1919.

[fol. 466] The drawing marked "Gulick Exhibit D-793-X" in the interference record, here marked for identification as Plaintiffs' Exhibit 1Z, is a design similar to the piston furnished the Franklin Company; it is similar to piston Exhibit B in this case. This drawing bears the date of February 11, 1919. The Franklin Company, in February 1919, was still working upon pistons like Exhibit B, trying to improve the design of them.

(At the trial, during the reading of the deposition:

By Mr. Richey: Now about these blueprints D-793-X, D-944-X, and D-960-X, I want to offer the same blueprints that were in the interference records and have them substituted for the lithographs, Defendants' Exhibit CC. These were the original exhibits in the Gulick interference and are Exhibits CC'.)

I don't recognize the slot in the drawing marked "Gulick Exhibit D-944-X." It says that it is a proposed design for the Franklin Company, but I do not remember anything about it.

X Q. 215. I show you a drawing marked "Gulick Exhibit D-960-X" (included in Exhibit CC'). Do you remember that as a proposed design of Franklin pistons?

Mr. Bruninga: I make the same objection to this procedure.

A. Yes, sir. That drawing is dated May 30, 1919.

(Narrative continued) I don't remember the date when it was proposed for the Franklin engine, and the date on that drawing does not refresh my recollection.

The Aluminum Castings Company of Cleveland, Ohio, made some drawings of proposed designs for the Franklin Company. I do not recognize the name of the checker on drawing D-960-X.

I saw some of the pistons, Exhibits E, F and G, before I made this drawing, Exhibit Y. The one I saw was Exhibit F.

The maximum speed at which these pistons reciprocated in the engine cylinder, at that time, was about a thousand feet a minute. I should say that speed has been increased since then. I should say that the engines were redesigned on account of the adoption of the aluminum piston. The R. P. M. of the engines using aluminum pistons was 3200 [fol. 467] or 3300, and that is the maximum speed today. The maximum R. P. M. around 1926 was 2400 to 2600, I should say. I would say that the maximum pressure per square inch on the tops of these pistons, when the explosion takes place, is 350 pounds per square inch. In 1920, I guess, it was around 275. The length of stroke in the Franklin engine in 1920 was four inches.

Mr. McCoy: That gives you an average travel of 1733 feet per minute. That would be much less than the maximum speed, I should judge, for 1920.

(Narrative continued) When I examined the records there at the Franklin plant since 1926, I did not find any definite records that I could offer as evidence, other than of the Long pistons like E, F and G. Long did submit to the Franklin Company other designs of pistons than those shown in E, F and G. I couldn't give you the dates of the records of Long pistons, because I didn't bring a record of those dates, and I don't remember them. I did not find anything earlier than March, 1919.

I have heard of Frank Jardine. I should think he is a well-known piston engineer, who has worked for the Aluminum Company for a number of years.

Mr. Bruninga: That is objected to as having no foundation in the direct examination.

I have also heard of Howard E. Maynard, a well-known automobile engineer, who worked for Chrysler Company for a number of years. I met him personally.

I have also heard of Louis P. Mooers, a well-known automobile engineer.

I don't know who suggested putting the three ribs in the top of the Long piston instead of one, and I don't know when that was first done. I know this Exhibit G has got them.

Mr. Richey: Cross-examination closed.

Re-direct examination.

By Mr. Bruninga:

I make my living by doing consulting engineering work. I have an office, and office expenses. I also have living expenses. I have a wife and six daughters. I did not have to come here, but came at your request, as an accommodation to you.

[fol. 468] In order to have the piston satisfactory in an operating engine, there has to be a certain amount of clearance between the piston and cylinders.

I cannot now describe the Kant Skore piston which was mentioned on cross-examination.

The Mr. Maynard whose name was mentioned on cross-examination is Howard E. Maynard. To my knowledge, he was with the Maxwell and the Chrysler Companies. He was with other companies before being with the Maxwell. The Maxwell Company is not now in existence. I can't remember when it went out of existence, though. I understand it was taken over by Chrysler.

I saw pistons of the general construction of the Maynard patent 1,655,968, a number of years ago. The pistons referred to in my testimony did not have that I-slot in them.

When I was called to testify in 1926 I had practically no notice; that is, I remember that Mr. Long wired me to come to Detroit and I left the same day, or, at least, that night. I had very little preparation to refresh my memory before I got on the witness stand. We discussed a few questions, as I remember it, before I went on the witness stand but very slightly.

I did not talk with Mr. Venner about the evidence I was to give in this case. It has been several years since I have seen him. There is no reason why I did not talk with Mr. Venner about this case, in the last week, except that you asked me not to talk with other witnesses not directly, but

impliedly. I understood that I was not to talk to any other witness.

At the time that we were discussing, the honing process had not been developed, that is, in a production way, in our factory, and the cylinders were more or less rough and lifted this grinding fuzz. The cylinders were more or less uneven, due to the very minute channel marks in the wheels, and then the wheels were apt to leave a slight fuzzy surface, it would be like, under the microscope. That, in our case, gave the pistons a tendency to score when the engine was first started up, after being assembled. That is true in other pistons besides the Long, but that difficulty appeared in the Long piston rather seriously, during our experimental work. As I have already testified, the clearances on Exhibit B were three thousandths at the bottom and nine at the top; and in Exhibit E they ran four thousandths all the way up, the [fol. 469] clearance being less on Exhibit E than on Exhibit B. It probably had an effect on the tendency to score, with a new piston.

The honing process considers the use of a hone or a stone rubbed up and down and circumferentially with the cylinder, so as to smooth or remove the grinding marks. We did not employ that honing process in 1920, nor did we employ it while I was with the Franklin Company. It was not used until after 1924.

I remember drawing D-739X (included in Exhibit CC'), as having been furnished to the Franklin Company by the Aluminum Castings Company of Cleveland, Ohio. I couldn't identify the date it was furnished, but I should judge that it would be around February 11, 1919. I understand the construction of the piston shown in drawing D-793X; it is practically the same construction as Exhibit B piston. I have an idea that the Aluminum Company furnished that drawing to the Franklin Company because they were asked to make a mold for that piston, or were asked to quote us on a mold for that piston.

I do not remember drawings D-944X and D-960X. The Aluminum Castings Company never furnished pistons to the Franklin Company, like D-944X or D-960X, to my knowledge.

The following statement, which was a fact, is contained in Defendants' Exhibit D: "The Franklin engineers, however, realizing the particularly desirable features of the aluminum alloy piston, have for the past three years, been con-

ducting exhaustive experiments with the view of securing a design such that the undesirable features would be eliminated." The statement, "That has been accomplished" was also true at the date of this bulletin, November 11, 1920. The use of the Long piston was the method referred to in that bulletin. That Long piston was similar to Exhibit E.

As to the test of Long pistons in which two pistons froze, and referred to in my cross-examination, as I remember, that test was made on a block, with a motor on the block, having Long pistons in it, and it was run under very severe conditions, the pistons having set up under conditions that the regular production pistons at that time would not stand, without seizing. That test is referred to in Exhibit Z, my report of March 18, 1919. In the second sentence it says, "Several tests have been run in connection with this piston, [fol. 470] the first being a setup test on the block with baffle plates under the cylinders which did not give a sufficient amount of oil so but what a set-up was obtained in about nine minutes. This was a more severe test than we ordinarily give our regular production pistons such as we are now using, and it is doubtful even if the pistons were undercut as we recommend them to be for use in the southwest would stand up under this test any longer than these pistons did."

Mr. William M. Venner developed a piston of his own. I saw some of those pistons at the Franklin plant, in Syracuse. They were an aluminum alloy, slotted type piston, and had the portions of the skirt being supported by a web running down from the head. That was, in general, his design. That was some time after, or about the time we adopted the Long pistons in production, I should say. We tested those pistons, as I remember, but were not particularly impressed with their performance as compared with the Long piston. Their performance was probably better than the performance of Exhibit B.

I should say Defendants' Exhibit K was a sketch of the piston that Mr. Venner furnished us for a test.

When I made Exhibit Y, during my direct examination, I did not look at either of the Exhibits B, E, F or G to make the drawing from. You put those pistons in a box.

I never met Louis P. Mooers. I do not know where he is now.

Mr. Bruninga: Redirect examination closed.

Recross-examination.

By Mr. Richey.

Before I went on the witness stand to testify in the interference in 1926, I talked with Mr. Long and Mr. Fletcher, as I remember, or both of them. I do not remember anybody else with whom I talked.

In addition to being employed in this case in the manner we have talked about, only so far as to support my testimony, I have been employed to look up evidence for Defendant and interview other people about it. All my dealings in these matters have been with Mr. Bruninga. I have been told who the principal is.

R X. 8. You were told it was the Sterling Products Corporation, of St. Louis?

[fol. 471] Mr. Bruninga: That is objected to as immaterial, at this stage of the proceeding.

Mr. Richey:

R X. 9. That is right, isn't it?
A. Yes, that is right.

(Narrative continued) I expect Sterling Products Corporation to ultimately pay me for this work.

I can't tell you when I first saw pistons like shown in the Maynard patent, with the slot. I should say they have been on the market, with the slot in them, for a number of years, and in wide use, not only for replacements, but in production by a number of automobile companies. I don't think they were used with the slot in them by the Maxwell Company, but I am not sure of that to the extent that I could deny that they did have the slot in them.

I did not myself design any aluminum pistons, after the Franklin Company adopted the Long piston, with the idea of getting around the Long piston patents. I did design that oval piston, about which we talked yesterday, with the idea of getting out of paying a royalty. What I had in mind was, your first question related to Mr. Venner's piston, and that was more or less, to my mind, along the Long design. We didn't do any experimental work along that line, to get around the Long patent. We did use some oval pistons, which did not infringe or have anything to do with the Long

patent. The oval piston is a trunk piston. We did experiment with the Long piston with the idea of improving upon it. I don't remember that we took out any patents on any aluminum pistons, after the Franklin Company adopted the Long piston.

Mr. Richey: That is all.

Redirect examination.

By Mr. Bruninga.

The date I had in mind with reference to the Maynard piston without the slot, was around 1919 or 1920. I should say that at that time it did not have a slot in it.

I haven't seen Mr. Long for a long time; I can't remember the date. It seems to me not since the last time I testified, in 1925, in that interference proceeding.

I have not as yet been paid anything in this proceeding, and I do not know where the money is coming from, but I look to you to see that I get it. I am willing to trust you to pay me for it.

[fol. 472] Mr. Bruninga: That is all of the depositions.

* * * * * * *

Thereupon Louis M. Stellman, being first duly sworn, testified as follows:

Direct examination.

By Mr. Bruninga:

Q. You are the Louis M. Stellman who has previously testified in this case, as in the deposition just read?

A. Yes.

Q. And you were in the court room during the greater part of the reading of that deposition?

A. Yes, sir.

Q. You stated in your deposition that you graduated from the University of Michigan in Mechanical Engineering; and will you give briefly the general course, just as brief as you can?

A. The regular course such as the University of Michi-

gan offered its students to get a Bachelor of Science Degree in Mechanical Engineering.

Q. Did that include drafting?

A. Yes, we had some drafting work.

Q. Design work?

A. Yes.

Q. Design of machinery and parts?

A. Yes, sir.

Q. Can you read drawings?

A. Yes, sir.

Q. Have you read patent specifications?

A. Yes, sir.

Q. Do you understand them in connection with the drawings?

A. Yes, sir.

Q. Do you know anything about claims of patents?

A. Not particularly, no, sir.

Q. You are not a patent expert then, are you?

A. No, sir.

Q. You don't claim to be?

A. No, sir.

Q. Have you ever testified in any court proceedings at all except the Long interferences and this deposition that has just been read?

A. No, sir.

Q. You are not a professional expert in law suits then, are you?

A. No, sir.

Q. Do you remember whether there was one or more depositions in these Long interferences; in other words, [fol. 473] did you testify just once, or a number of times?

A. I testified once.

Q. Do you belong to the Society of Automotive Engineers?

A. Yes, sir.

Q. Have you kept in touch with automotive engineers during the time you were with the Franklin Company and to date?

A. More or less.

Q. What is your present business?

A. Consulting engineer.

Q. Specializing in anything?

A. In automotive equipment and engines in particular.

Q. You have received no medals, have you?

A. No, sir.

Q. But you are the Louis M. Stellman to which the Court of Customs & Patent Appeals referred to as follows in 47 F. (2d) 369, at 370, the cause being Hartog v. Long, Interference appeal No. 2610: "Louis M. Stellman, a witness whose testimony displays an intelligent grasp of the situation, and who was at that time chief engineer of the Franklin Manufacturing Company." You are the one the court refers to?

A. Yes sir.

Q. I understand from your deposition you had experience with cast iron and aluminum trunk pistons?

A. Yes, sir.

Q. Did that include the design and drawing of such pistons?

A. Yes, sir.

Q. Have you had actual experience in the manufacture of such pistons?

A. Yes, sir.

Q. And the machining?

A. Yes.

Q. Have you ever had any machine shop experience?

A. Yes, sir; before I went to college I had machine shop experience, and while I was in college. Of course since coming from college I have been intimately connected with machine shops and machine shop practice.

Q. You stated, I believe, that you took a student course at the Franklin Company. Did that include any actual machine work?

A. Yes; when we left college we actually went into the shop and performed machine operations of various kinds.

Q. Have you had actual experience in the installation of pistons in automobiles?

A. Yes, sir.

Q. Both aluminum and cast iron?

A. Yes, sir.

Q. Have you had experience with the actual testing of aluminum and cast iron trunk pistons in automobile engines?

A. Yes, sir.

[fols. 474-489] Q. Did that include block tests?

A. Block tests and road tests.

* * * * * * *

[fol. 490] Q. I want to call your attention to the Long patent 1,489,499. Have you read that patent?

A. Yes, sir.

Mr. Richey: I object to that as not set up in the answer.

The Master: Same ruling.

Q. Will you briefly describe the construction of that Long patent?

Mr. Bruninga: It is to be noted here that counsel called this witness' attention to that patent during the taking of the deposition.

Mr. Richey: Not for the purpose of assailing the validity of any of the patents in suit.

A. This patent covers a slotted piston, one side, as shown in Fig. 2, having what is known as a tongue with two vertical slots, one on each side of the tongue, running into a horizontal slot below the lower right lands. On the other side of the piston there is a section of the skirt cut away by a system of vertical and horizontal slots, this section being supported by ribs running to the wrist pin bosses. This makes that portion of the wall flexible, and also the portion on the other side of the tongue is more or less flexible, above the slots, the horizontal slots, that portion of the piston is really of the same diameter, apparently, as the ring grooves, so that there will be no bearing on that portion on the cylinder wall during the operation of the piston.

Q. Referring to Fig. 5, which is a cross section, what parts are flexible?

A. The parts 8a are supposed to flex, I judge.

[fol. 491] Q. Do you think they would flex?

Mr. Richey: I object to that as leading.

A. I don't think that would be a very flexible construction, if that is what you mean. Perhaps—I understand it is the idea of the patent.

Q. But I am asking your opinion, with the construction shown in Fig. 5, will the webs 8a flex?

A. Yes.

Q. How will they flex?

A. When the piston shoves out against the cylinder wall, that portion of the skirt, of the webs, will bend.

Q. Away from each other?

A. Yes, away from each other on the outside, the outer end of the skirt—outer end of the ribs.

Q. What happens to the intermediate part 4?

A. That has to more nearly assume the straight line as the arc of the circle becomes greater.

Q. What are the slots 5-5 for?

A. To allow this to happen, to take place.

Q. I call your attention to the Long patent 1,872,772. Have you read that patent?

Mr. Richey: I object to that as not set up in the answer.

The Master: Same ruling.

A. Yes.

Mr. Bruninga: I want to call your Honor's attention to the fact, as far as Mr. Long was concerned, he was set up as a prior inventor and prior user, and all of that. I want to also call your Honor's attention to the fact that the application for this particular patent, and the first Long patent, were in interference with the Jardine application of the patent in suit.

Mr. Richey: Also the Gulick.

Mr. Bruninga: Also Gulick.

Q. Compare the structure of this patent with Defendants' Exhibit F?

A. I should say that Defendants' Exhibit F was essentially the same construction as shown in the Long patent 1,872,772.

Q. I note that the slot 9, or rather two slots, don't go all the way around Exhibit F. Is that a distinction?

A. These slots don't go all the way around? You mean in the drawing?

Q. In the drawing, don't go all the way around.

A. No, as far as the operation of the piston is concerned, [fols. 492-494] I shouldn't say there was a distinction. That is a fact, however.

Q. How about the reliefs on Exhibit F; they are not shown on the drawings?

A. The reliefs around the end of the wrist pin boss is not shown on the drawings, although there is a relief on the actual piston, Exhibit F.

Q. Well, how about those pistons that Long brought over to the Franklin Company that you have testified about, particularly like Exhibit F. Can you state anything as to the relief?

A. Yes, he had the relief around the end of the wrist pin boss.

Q. How does Exhibit E compare with that Long patent?

A. In principle, I should say the piston shown in E was the same as shown in the patent. There is some difference in the internal ribbing between the head and the wrist pin boss.

Q. There are three ribs instead of one, is that right?

A. Three ribs instead of one.

Q. The relief in Exhibit F, that is cast in, isn't it?

A. That is right.

Q. I notice also the slots on the outside corresponding to 8-8 in the patent are inclined in the Exhibit E; that is another distinction, isn't it?

A. Yes, but that would not affect the operation of the piston as I see it.

Q. Now, what have you to say about Exhibit G, in what way is that distinguished from the Long patent?

A. That is practically the same piston as shown in that patent.

Q. How about the reliefs?

A. The reliefs are cast in.

Q. How about the internal ribbing?

A. It has three ribs instead of one, as shown in the patent.

Q. How about the large relief right underneath the head of the piston?

A. That is cast in.

Q. Do you know what the purpose of that large relief was?

A. Simply to allow the tool to run out there and not to give a sharp corner at that point, I judge, in the supporting member to the wrist pin boss; also saves weight.

* * * * * * *

[fol. 495] Q. Well, the horizontal slot as shown in Figs. 1 and 2 seems to be located at the bottom of the ring groove; is that right?

A. That is right.

Q. Now, I believe you heard Dr. Jeffries testify that that would cause transmission of heat, ready transmission of heat, and would not effect much isolation between the head and the skirt. What is your opinion on that?

A. Well, as I have already testified, the rings conduct the majority of the heat from the head to the skirt, and if there

was a ring in this grove, that would help to conduct the heat to the cylinder wall. I mis-spoke myself first. I didn't mean conduct the heat from the head to the skirt, but from the head to the cylinder. And if there was a ring in this groove, it would help to conduct the heat to the cylinder wall rather than to pass it onto the skirt. Also I should say the ring there would help to insulate the head from the skirt.

Q. Now, the Mooers patent 1,402,309, specifically states, page 2, line 30, et seq: "It will be understood that this relationship might be that of a poor mechanical fit or joint which would be a poor conductor of heat, as compared with the metal of the head 2 and connectors 3, so that such heat as did pass from the head 2 to the skirt 1 would do so principally by way of the connectors 3, rather than from the head to the upper end of the skirt 1 directly." What have you to say now with reference to the slot 17 of the Franquist construction, as compared with the quotation from the Mooers patent?

A. I should say the slot 17 had much the same effect as the slot in the Mooers patent.

Q. Now, in the Mooers patent, however, there are narrow connectors 3 distributed around. Do you find such narrow connectors in the, for instance, Plaintiffs' Exhibit 1?

A. Not identical, not the same type connectors.

Q. How do those connectors compare with the connectors of the Franquist patent?

A. These connectors, I should say, would amount to about the same thing as in the Franquist patent.

The Master: You are speaking now of Exhibit 1?

The Witness: Yes.

Q. You mean of Exhibit 1. The connectors of Exhibit 1 are about the same as in the Franquist patent; is that right?

A. Yes.

* * * * * * * *

[fols. 496-505] Q. What could be done to make the structure more flexible, for instance, as shown in the model Defendants' Exhibit 3-Q, which has identically the same proportions as shown in the patent (Franquist)?

Mr. Richey: Wait a minute, are you testifying on that or does the record show that?

Mr. Bruninga: The record shows that.
Mr. Richey: All right, beg pardon.

A. The walls of this piston and these slots may be made thinner, the length of the slot could be increased, which would increase the lever arm and make the slots more flexible. Those are two of the things that I could see off-hand could be done.

Q. And what would happen if you cut all the way through a slot on one side of the wrist pin, one on either side?

A. That would make that side of the skirt adjacent to this cut very flexible.

Q. In what way would such a construction distinguish from the Hartog patent 1,842,022?

Mr. Richey: Object to that as immaterial.
The Master: Same ruling.

A. The function of the Franquist piston when slotted as you suggest would be similar to that obtained by the construction shown in this Hartog patent.

* * * * * * *

[fol. 506] Q. I call your attention to Ricardo patent 1,294,833. Have you read that patent?

A. Yes.

Q. What type piston does that represent?

A. That is the slipper type piston, the cross-head type.

Q. Do you know who Ricardo is?

A. Yes; I understand he is quite a noted British engineer.

Q. He has written in magazines a good deal, I think?

A. Yes.

Q. And he is a text book writer, too?

A. Yes, quite a noted engineer.

Q. How is he regarded in the automotive industry?

A. Very well, I think.

Q. Now, if you find, or if you would have found in 1918 that such a piston made of aluminum alloy would seize in the cylinder, what expedient would you have resorted to?

A. Slotted the skirt opposite the wrist pin or perpendicular to the wrist pin between the two webs.

Q. In 1918 you had already split a skirt, as I understand, of the structure that the Franklin used in 1916; isn't that right?

A. Yes.

Q. If you would have had a slipper piston in 1915 or at

the time that you started to split that skirt, would you have [fols. 507-524] proceeded differently?

A. No; I should say the same procedure would be followed.

Q. And what happens if you split the slippers vertically of the Ricardo piston structure and you put it in a cylinder with a small clearance and the temperature goes up?

A. The webs marked C would flex and the piston would have been made flexible.

Q. Could you stop those webs from flexing with the ordinary construction as used in slipper pistons?

A. Not if made with such amount of metal as shown in the drawing in the webs.

Q. In what way, if any, does the Ricardo piston structure differentiate from the Jardine patent structure of the Jardine patent in suit?

A. I would say essentially the difference was the slot in the slippers, in each slipper.

Q. Well, you do have some fancy ribs 27 and 27a, don't you?

A. Yes.

Q. In Jardine?

A. I don't see how they would affect the operation of the piston.

Q. And you also have a fancy curve from the ring flange down to the skirt, haven't you, that Mr. Ricardo hasn't got?

A. You mean in the slot?

Q. Oh, I mean this fancy curved web from 23 down to the main web.

A. Yes; but I don't see how that would affect the operation of the piston.

Q. I don't either. I am asking you. Now, Mr. Ricardo has overhanging slippers, as shown, for instance, in Fig. 3, which overhang. Why do you think those are overhanging that way,—for any useful purpose at all?

A. Well, it gives them a wider slipper bearing with that arrangement of webs.

Q. But it does prevent him from getting out a mold piece, doesn't it?

A. Yes.

Q. And in 1915, or even when you were a boy, what would you have done if you had found such a condition?

A. Cut them off if I wanted to get the mold out.

* * * * * * *

[fol. 525] Q. Will you explain the action of a piston such as shown in the Maynard patent, in which there are no reliefs shown, in the drawing Fig. 1, with the action of a piston such as Exhibit 1? I hand you a diagram, and you might say if you have examined that diagram?

A. Yes, I have examined the diagram.

Q. And put reference numerals on in making the illustration. First, tell the Court where that view is taken of Exhibit 1.

A. The view is taken just below the slot, a section of the slot through the piston, in its vertical direction, just below this open slot. In this piston, or in all pistons, of course, we get an expansion on the diameter, and taking a radius point, in this sketch I have taken it at the edge of the relief, but if Mr. Bruninga wants to have it taken there, the same argument would apply.

Q. Take it where it is marked with the numeral A, for instance, where you said "there."

[fol. 526] A. At A. We will have at least two forces due to expansion, taking place at this point. This one force will be on the diameter, through the center of the piston and extending out against the cylinder wall. This force would be represented by the vector, in this case B, and we have another force due to the expansion of the rib lengthwise, that rib growing in length, which we will represent by the vector C. Now, we will have a resultant force which we will call E, shown by the vector drawn between these two points and in the direction of the arrow on F. Then we will have, acting at this point or at this point——

Q. Acting at?

A. At A.

Q. Or mark the other one G.

A. G. We will have the force represented by the vector F in the direction shown, acting at the point A or the point G, which tends to push this portion of the piston out against the cylinder wall in this direction.

Q. You mean in the direction of the vector F?

A. In the direction of the vector F. That has to be compensated for in some way in order to make the piston work. If it wasn't, and that force was exerted in this direction, the piston would burn.

Q. You mean in the direction of the vector F?

A. In the direction of the vector F, it would burn or score, so that the action we get in this piston, Exhibit 1, is that

this short web, the portion of the web from the point shown as A to the point G has to flex and allow the piston to leave the cylinder wall to a certain extent, or reduce the force acting at A or G by the amount of the flexure.

Q. Do the webs, if we can call the parts H webs, actually flex then at the top in Exhibit 1?

A. No, these webs from this point represented by A, are integral with the head, so that there is no flexure of the web from this point back at the top of the web, as I see it.

Q. Now, explain any pushing out action along the wrist pin axis in Exhibit 1, and compare it with the Franquist patent, using in that connection the model, if you want to, Exhibit 3-G?

A. Of course in that action we get an expansion along the wrist pin boss and in the direction of the wrist pin, which would tend to push the skirt, or portions of the skirt, out. This has been compensated for in this piston by the vertical slots, and that force is somewhat taken care of, although these ribs being as stiff as I have shown and as short, make that force rather difficult to compensate for in this design, more so I should say than in the Franquist patent.

[fol. 527] Q. Now, does the slot actually close as illustrated for instance in the diagram which you have referred to and which I will mark for identification Defendants' Exhibit 4-A?

A. Why, as a matter of fact I think that what we get in this, and I believe practice bears us out, is that this portion of the skirt actually bends down towards the center of the piston in the direction of the arrow I. In that bending down, that relieves the pressure along the surface and we will get less friction due to the bending of this web or this skirt toward the center of the piston, but the slot does not close particularly.

Q. Well, will you get that action if you don't have any relief at all, as indicated from A to G in 4-A?

A. No.

Q. Well, will you get any appreciable action?

Mr. Richey: I object to that as leading and trying to get the witness to contradict his other answer.

A. I don't think I would contradict it, Mr. Richey, necessarily in saying if this relief was not here these forces would be applied directly over the end of the rib so that they would get very little flexure of this skirt toward the center of the

piston. It is perfectly evident to me that they put that relief in the piston because they had very heavy bearing over the end of the rib, and that is the reason why the piston was scoring and the piston didn't work satisfactorily at all without it.

• • • • • • •

[fol. 528] Q. Do you consider a piston constructed as Exhibit 1, suitable for a Franklin engine?

A. No, sir, I wouldn't say it was. I wouldn't consider it was flexible enough for practical operation in the Franklin engine.

Q. But you did use the Long piston as you have testified?

A. Yes.

Q. Why was the Long piston used and suitable and why would not in your opinion Exhibit 1 be suitable for that Franklin engine?

A. Because, referring particularly to the top of the skirt, the Long piston is very much more flexible at the top of the skirt than the Maynard piston and will operate because of this added flexibility, where the Maynard piston would not, in the Franklin engine.

Q. Do you consider pistons like Exhibit 1 but with no relief in the thrust faces, practical?

A. I wouldn't call it practical.

Q. But Exhibit 1 has those reliefs?

A. Yes.

• • • • • • •

[fol. 529] Q. Now, considering the Jardine patent and considering it as a slipper piston, what patent that you have previously referred to does it most closely resemble?

A. Well, it has some of the elements of the Ebbs patent, for one, 700,309; it has resemblance to the Long patent 1,872,772; it has resemblance to Schoengarth patent 1,174,092 because of the T-slot as shown.

Q. I am just considering it as a slipper piston, now, not as a trunk piston.

A. And it has decided resemblance to the Ricardo patent 1,294,833. It also resembles particularly the piston shown in the Anderson patent 1,283,021.

Q. Now, as a slipper piston, how does it distinguish from the Ricardo patent?

A. Why, aside from the slotting and with the natural dimensions shown, I should say it was very similar, practically the same design, with a somewhat different arrangement of the webs where the webs join the head.

Q. How about the Anderson patent in the arrangement of the webs?

A. It is very similar to the Anderson patent. The Jardine patent is very similar to the Anderson patent as to the webs.

Q. Considering the Jardine patent structure now as a trunk piston, what prior art structures do you think it resembles?

A. All prior art structures that have the T-slot would represent the Jardine piston.

Q. How with reference to the relief?

A. And of course a slipper piston is relieved on the side, as practically all pistons have to be in some manner or other.

Q. Now, what is your understanding of the webs 25 of the Jardine patent structure, are they rigid or flexible?

A. Flexible.

Q. Even at the top?

A. Yes, to a certain extent.

Q. What effect does the depth of the slot have, Fig. 6, for instance, on flexibility?

A. The deeper the slot the more flexible the web.

Q. Would you consider Exhibit 1 as a flexible web, at the top?

A. Not to the extent as shown in Jardine, if that is what you mean.

Q. Well, would you consider it as a flexible web at all?

[fols. 530-536] Mr. Richey: I object to that. He has already answered.

A. No, I don't think. As I have already explained, except for the relief as shown on Exhibit 1, I don't think there is any flexure at the top of the skirt where the skirt joins the web.

Q. I think I asked that too broadly. When you said to any appreciable extent, did you mean in ten thousandths of an inch, or what?

A. Yes, I mean in, I might express it as one ten thousandth of an inch, but I mean any appreciable extent which would allow it to work satisfactorily in an automobile engine.

Q. If the Jardine structure does not have flexible webs,

what have you to say as to the action illustrated in that diagram, Exhibit 4-A, with no relief?

A. The action would be very much the same as shown in the diagram and as explained.

Q. I mean with no relief from A to G, that is what you understood?

A. Yes.

• • • • • • •

[fols. 537-544] Q. In the issue of Automotive Industries, of January 29, 1920, page 362, in an article written by Mr. Gunn, he says: "Pistons of the Long and Franquist patent are split to allow the piston to spring. They can for this reason be fitted more closely than the more conventional types." What is your opinion as to that?

A. I should think he was right as of that date.

Q. Can you tell me what type piston is illustrated in Fig. 8 on page 363 of that article?

A. That is the so-called Long type.

Q. Can you tell me what piston is illustrated in that figure? It has no number,—the left view at the left of the page on page 364?

A. That is the so-called Franquist type.

• • • • • • •

[fol. 545] Cross-examination.

By Mr. Richey:

Q. Now, let's look at this Long patent 1,489,499: was that piston ever used commercially, to your knowledge?

A. No, sir.

Q. Was this piston shown in the White patent used commercially to your knowledge?

A. No, sir.

Q. Was the construction shown in the French patent to Serex 434,147, ever used commercially to your knowledge?

A. No, sir.

Q. The one shown in the Pomeroy patent 1,499,073: was that ever used commercially?

A. Not that I know of.

Q. You know that Pomeroy is an internationally known automobile engineer, don't you?

A. Yes, you can call him international; he is known in two countries anyway.

(Short recess taken.)

Q. Mr. Ricardo was also an internationally known automobile engineer, wasn't he?

A. Yes, sir.

Q. Now, as I understand it, when you were working with the, first went to work with the Franklin Company, they were using an iron piston, is that right?

A. That is right.

Q. Trunk type piston?

A. Yes.

Q. And for an air-cooled engine?

A. Yes.

Q. So the question of the heat was a greater problem with them than with the water-cooled engine; is that right?

A. Yes, that is true.

Q. And what clearance did you use with the iron piston?

A. As I remember, we used 3-5, 3 at the bottom of the skirt and 5 at the top.

Q. And the first aluminum piston you used was a trunk type piston?

A. Yes.

[fol. 546] Q. And when was that put in?

A. That was put in about 1916.

Q. And what was the clearance?

A. 8-11, as I remember it; 8 at the bottom and 11 at the top.

Q. And from then on, at least up until 1920, your effort was to secure an aluminum piston that would reduce that clearance; that is right, isn't it?

A. That is right.

Q. And avoid the slapping, sticking, and scoring?

A. Yes.

Q. Now, you also tried Magnalite pistons, didn't you, in that period?

A. Those were the ones made by——

Q. What do you mean by Magnalite?

A. I say is that the trade name of the Walker-Levett Company?

Q. Do you know whether it is or not?

A. I am asking you if it is.

Q. Yes.

A. We did use it.

Q. And you tried the Lynite piston?

A. Yes.

Q. And you split the skirts of both the Magnalite and the Lynite up part way from the bottom, like in Exhibit B, did you?

A. Yes.

Q. You also tried light weight cast iron pistons known as the Wainwright piston, didn't you?

A. Yes; we tried some of those.

Q. You tried slipper type pistons, didn't you?

A. I don't remember that we actually tried the slipper type like shown in the Jardine patent, for instance.

Q. Well, you tested out slipper type pistons with the idea that you might use them if successful?

A. I don't think we ever tested that particular type of Jardine.

Q. I wasn't asking you about Jardine; I was asking you about what you call the slipper type piston.

A. If you call the Long type a slipper type piston, we did.

Q. I am not saying yes or not how I classify the Long type piston. But didn't you try pistons generally like such shown in the Anderson patent, or in one of the other patents your counsel said disclosed the slipper?

Mr. Bruninga: Ricardo?

A. No, sir, we never tried that to my knowledge.

Q. Then you tried pistons with the slit part way up from the bottom, like Exhibit B, with the Stellman rings in them?

A. I never heard them called that kind of ring; but we tried some that expanded along at the bottom.

Q. These rings you used to expand them out, such as shown in the Van Bever patent?

A. That is right.

[fol. 547] Q. Did you try a piston called the Zephyr piston?

A. I think we did run some tests on a set of those.

Q. Did you try a short skirt Wainwright piston?

A. I don't remember it by that designation.

Q. You tried several types of composite pistons in that period, didn't you?

A. Yes, sir.

Q. Then you varied the thickness of the side walls, didn't you, of the piston?

A. Yes.

Q. And you tried pistons that were tapered and pistons with straight skirts?

A. Right.

Q. And pistons with off-set pin bosses?

A. Yes, sir.

Q. Then you tried pistons made of various metals, including aceril, abc, macadam, and deltum?

A. You are bringing back a lot of memories; I had forgotten all about those things.

Q. Well, you did try all of them?

A. I think we did.

Q. And that was when you were chief engineer?

A. I wouldn't say that; when I was employed by the Franklin Company.

Q. As an engineer?

A. Yes.

Q. And any suggestion that you would make about improving the piston, I suppose, was considered and perhaps tried out?

A. It might have been, yes.

Q. Did you try anything else to reduce this clearance and prevent slapping and scoring and sticking during that period?

A. I think you have covered the ground rather thoroughly.

Q. I suppose you and the other engineers down there gave a good deal of thought to this solution?

A. Yes, sir.

Q. The piston question when all those things came along?

A. Yes, sir.

Q. And many schemes were submitted to you by people from the outside during that period?

A. Yes, I would say some.

Q. And they were considered?

A. Yes, sir.

Q. When was that slit ring put in the piston?

A. As I remember it, we never put that in the production piston. It was used by the service department of the Franklin Company for pistons already in service and for some pistons that they sent out from the factory to go into cars in service.

Q. That is, you are talking about the piston in the Van Bever patent now?

A. With the slit ring.

[fols. 548-550] Q. When was it first used in service?

A. I would say the early part of 1917, around there some time; I can't tell you the correct date.

Q. How long was that used?

A. Oh, it was used more or less until we used the Long piston.

Q. To your knowledge were other automobile companies than the Franklin during that period working on this problem of reducing the clearance with the aluminum piston?

A. From the period 1915 on?

Q. To 1920, we will say?

A. Yes, sir, they were.

Q. And how general was that problem being worked on at that time?

A. Quite general, I should say. I know of one other company that used them more or less in that period.

Q. Those who were working on it would include the leading engineers of the leading automobile companies of the country, wouldn't they?

A. Yes.

Q. I call your attention to Defendants' Exhibit H and to the figures there under the head "Well known types of pistons." What do those figures mean down there?

A. That compares the general dimensions of the piston as outlined in the text between the so-called oval type piston and the Long type piston.

Q. What do you mean by the "oval" type and the "Long" type?

A. The oval type was the piston something like Exhibit B, but ground so that a section taken through the wrist pin boss, for instance, would have an oval shape, the largest diameter of the oval being in the direction of thrust, the shortest diameter being parallel to the wrist pin.

Q. Did the Long type mean the one shown in this Long patent 1,872,772?

A. Yes.

Q. That is, it was the type of Long piston that was used commercially by Franklin at that time?

A. Yes.

Q. Referring to your drawing Exhibit 4-A and to the relief on the same at the edge of the connection between

the thrust face and the webs, would you say a piston would be inoperative without that relief?

A. I would say it would be very apt to score at the point at the end of the web.

Q. You don't say it would be inoperative?

A. I don't say you couldn't operate it, no, under any conditions; but I say under severe conditions.

Q. You don't say the piston shown in the Maynard patent is inoperative?

A. Not under any conditions; but under severe conditions.

* * * * * * * *

[fol. 551] Q. Now, can you answer the same question about the piston shown in Exhibit 21 you have answered about the other one, without the section you had to have?

A. There again, the question of clearance enters, and they don't show on those drawings what clearance those pistons are supposed to operate with. I see they have a place for it there, but it is not on the drawing; perhaps they were afraid to put it on. We have got to have more information than that, if you are going to design a piston for any given motor.

Q. You would have to have the clearance given you before you can say whether any piston is practical or not?

A. Yes; what clearances you want to operate with; what temperature you want; how much speed you are going to try to get out of the motor; and a lot of things.

Q. You couldn't tell how a piston operates without knowing the clearance?

A. That would be one factor, I think.

Q. That is not the question.

(Question read.)

A. That is one factor.

Q. Well, you would have to have the clearance?

A. Yes.

Q. Now, let's assume, suppose the clearance at which the piston shown in Exhibit 21 was operated was .001" per inch. You understand what I mean by that?

A. Yes. Then it would be a practical piston. I should say that would be a pretty stiff piston to operate at .001".

Q. Even so, it would be practical?

A. No, I don't think it would.

Q. You think it would be too stiff to be practical?

A. I am talking about operating under severe operating conditions.

Q. I am talking about general run of mine commercial conditions; you would think this piston here would be too stiff to be a practical piston?

A. I don't know what you mean by "run of mine."

[fol. 552] Q. I mean every day driving of motor cars, day in and day out, for example.

A. I don't think that piston would run in the Franklin car.

Q. We started to talk about a water-cooled car.

A. You mentioned the Franklin.

Q. You think it is too stiff to be a practical piston for common usage?

A. It looks like a pretty rigid construction to me.

Q. Of course, that doesn't answer my question. I want to know whether it is too rigid to be practical.

A. I would say they would have quite a lot of trouble with that piston for piston slap, if they ran it at clearance enough so it wouldn't freeze or stick.

Q. I suppose you would say the same thing about the piston shown in Exhibit 22 without the relief on there?

A. Yes.

Q. Now, this relief that you spoke of, shown in Exhibit 4-A, improves the operation, does it?

A. I should judge so.

Q. What do you think makes this piston shown in Exhibit 21 stiff?

A. Well, in the first place I don't see that there is any flexibility shown in those ribs, particularly.

Q. The ribs in the heads, you mean?

A. These ribs here. There is no slot in the skirt—oh, yes, there is a slot shown on one side. In other words, it is a piston somewhat similar to Exhibit 1; is that right?

Q. Yes, my understanding of it. Now that you have seen the slot in there, do you still say it would be too stiff?

A. I would say it would be a pretty stiff piston at that.

* * * * * * *

[fol. 553] Q. You were asked which of the prior art constructions that have been relied upon here, including the patents, you thought was nearest the Gulick. As I

understood you, you named several, including the Ricardo. Now, which one of all do you think comes nearest embodying the improvements of the Gulick patent?

A. I should say that Ricardo came as close to it as any.

Q. What would be your second choice?

A. Let's see: what three did we pick out?

Q. Can't you answer without looking?

A. I would have to refer to the three.

Q. Well, take the whole bunch of them there.

A. I would say the Long piston came next.

Q. That is patent 1,872,772? And which one do you think is next? What is your third choice?

A. Perhaps the Spillman & Mooers.

Q. Spillman & Mooers 1,092,870?

A. That is right.

Q. Now, you were asked the same question about the Jardine patent, and I think you named several patents. Will you now tell us which of the prior art constructions here relied upon you think comes nearest embodying the improvements in the Jardine patent in suit?

A. I would say it came the nearest to the Ricardo patent 1,294,833.

Q. I will ask you the same question about the Maynard patent in suit.

Mr. Bruninga: You ask the witness, without the slot?

Mr. Richey: I am asking you the whole, taking the Maynard piston as you know it, as a piston in structure, mode of operation, and results, which is the single patent in the prior art, which of the devices relied upon as prior art do you think comes nearest embodying that improvement?

[fol. 554] A. I would say the Ricardo piston is as close as any of them.

Q. I would ask the same question about the Mooers patent in suit.

A. I think Chenard & Walcker patent might come nearer Mooers.

Q. That would be your choice,—Chenard & Walcker?

A. Yes.

Q. Now I ask you the same question about the Schmiedeknecht patent in suit.

A. (After examining patent.) This patent called Pugh.

Q. British patent to Pugh 17,256; that is right, isn't it?

A. Yes.

Q. Now, I suppose beyond the patents which you have named as your choice, with each of the patents in suit, you would have to incorporate features from other constructions in order to get nearer the patents in suit, wouldn't you?

A. Yes, I should say that not every feature in each patent in suit was covered by any one patent which I might have picked out.

Q. You take the Ricardo construction as shown in the Ricardo patent as Ricardo showed it. That skirt is not flexible, is it?

A. No; he designed that to be a rigid structure, I think.

Q. There is no suggestion in his patent that it might be flexible?

A. I don't remember any.

Q. As shown, the webs there would not bend or flex laterally, would they?

A. No.

Q. And neither would any part of the skirt?

A. No, not appreciably, I wouldn't think.

Q. Would you expect that to operate any differently from a trunk type piston?

A. Why, it would operate differently in regard to oil consumption perhaps, and perhaps in regard to cooling. As far as flexibility is concerned, I would say that perhaps having a large relief on the side, might allow those slippers to straighten out or flex so as to draw away from the cylinder wall slightly.

Q. You were here and heard Dr. Jeffries testify about the efforts that were made to make that Ricardo piston better than a trunk type piston, weren't you?

A. Yes, I was here when he testified about that.

Q. Have you any reason to disagree with what he said about the efforts, the trouble they had with it?

A. No, not particularly.

* * * * * * *

[fols. 555-556] Q. And you know that Spillman was, during a number of years, working on this piston problem, don't you?

A. Yes.

Q. Did you know of this type of piston shown in this Spillman & Mooers patent between 1916 and 1920?

A. I think so, yes.

Q. That is, at the time that you were making all these, trying out all these things to improve the Franklin piston?

A. Why, some time during that time, yes.

Q. Did you know of the Ricardo piston during that time?

A. Yes.

Q. Did you know of the Franquist piston during that period?

A. Yes.

* * * * * * *

Q. Did the other engineers there at the Franklin Company know about the Spillman & Mooers piston at that time, to your knowledge?

* * * * * * *

Q. Well, did you discuss it with any of them?

A. Yes, with some of them.

Q. Did you also discuss the Franquist piston with any of the Franklin engineers during the period you were working on the piston problem?

A. Yes, sir.

Q. And the same question about the Ricardo piston?

A. Yes, sir.

* * * * * * *

[fol. 557] Q. Now, take a 4" piston, how much would the clearance have to be for the split to perform any function?

A. In a racing car?

Q. Yes.

A. Well, I say I don't know how much it would have to be.

[fols. 558-562] Q. You would answer the same about a pleasure car?

A. I have had more experience in pleasure cars and I think I might say with a 4" piston in a pleasure car, .003" would work satisfactorily.

* * * * * * *

[fols. 563-565] Q. And that makes a new mode of operation?

A. It makes it flexible.

Q. Well, it makes it operate differently from what is shown in Spillman & Mooers?

A. Yes.

Q. And gives a different result?

A. Yes.

Q. Of course if you split the Chenard & Walcker skirt, you would get in the same way a different mode of operation and result from what is shown in the Chenard & Walcker patent?

A. Yes.

Q. And the same thing would be true splitting the Ricardo skirt?

A. Yes.

Q. This Long patent, 1,872,772, shows no relief at the bosses, does it?

A. No.

* * * * * * *

[fol. 566] Q. Now, you have said something about the relation between the flexing of the web at the top in Exhibit 1 and in the Jardine patent, and you said that there would be more flexing in the Jardine patent than in Exhibit 1. That would be a difference in amount or degree, wouldn't it?

A. Yes.

* * * * * * *

[fol. 567] Q. Now, you said that in your opinion the nearest thing in the prior art to each Jardine and the Maynard patents was the Ricardo piston. To get the mode of operation and results of either Jardine or Maynard, the Ricardo piston would have to be modified in some way, wouldn't it?

A. Yes.

* * * * * * *

Q. Referring to the Long patent 1,489,499, I believe you said the webs 8a would be flexible.

A. To a certain degree I should say they would.

[fols. 568-569] Q. And in saying that you assume the piston would be made of the material ordinarily employed in making pistons?

A. Yes.

Q. And the same thing would be true of these webs 17, 18, and 19 in the Gulick patent, wouldn't it?

A. Yes.

Q. Anybody understanding pistons and skilled in the piston art would know those webs would be flexible if made

of the material of which pistons are ordinarily made, wouldn't they?

A. Yes, if they were not tied in any way, as shown in this piston.

Q. You wouldn't need anybody to tell that or describe that to you; you could tell that from the drawing, couldn't you?

A. I expect I could.

Q. That is, with your knowledge of the piston industry you would know by looking at the drawings that those webs would be flexible if the piston was made of material of which you ordinarily made pistons?

A. Yes.

Q. Do you think this Exhibit 20 was a fair reproduction of Figs. 1 and 2 of Gulick?

A. (After examining) I should say in general it was made after the Gulick patent.

Q. Do you see any differences between this patent and the Figs. 1 and 2 of the Gulick patent?

A. The internal ribbing; there are some slight differences in the ribs on the vertical surfaces. These two ribs near the bottom are not shown on the drawing, but I think in general it was made to follow that design.

Q. The mode of operation and the results of the two would be the same?

A. I should think so.

Q. Now, the Gulick piston is flexible at the top of the skirt and at the bottom and all the way along, isn't it?

A. Yes.

Q. Will you look again at Exhibit 1? Between the boss and the head on the outside there is a web. That helps to support the boss, doesn't it?

A. Yes.

Q. And that goes direct to the head from the boss, the front part of the boss?

A. The outside part of the boss.

* * * * * * *

[fols. 570-571] Q. And it is difficult for you to keep straight just which one was shown you first?

A. Except that I am very sure that the piston that attracted my attention originally that Mr. Long brought to show us in 1916 had ribs of this type in a general way so

that these skirt walls could flex. (Referring to Exhibit F.) That is what interested me and made the deep impression on me in 1916.

* * * * * * *

[fol. 572] Q. And a good many different kinds of pistons were tested?

A. Yes, but I want to state again our activities centered on the Van Bever piston during those days.

Q. That is a change in the Van Bever piston?

A. Yes.

Q. That is, you changed it and then tested it?

A. Yes.

Q. And what was the purpose of all those changes?

A. To get it to work better.

Q. Wasn't the Wainwright piston tested in June, 1917, in the laboratory at the Franklin?

A. It may have been.

Q. You don't remember?

A. No, not as to that particular piston.

[fol. 573] Q. Well, it was tested a number of times during that period, wasn't it?

A. It was tested during the period, yes.

Q. That is, during 1917 and '18?

A. Yes.

Q. And of course that wasn't the Van Bever piston, was it?

A. No.

Q. You also tested cast iron pistons during that period?

A. Well, the Wainwright was a cast iron piston.

Q. You also tested composite pistons during that period, didn't you?

A. I don't know whether we tested them during that period or not. We tested them sometime.

Q. You tested the Zethyr piston during that period, didn't you?

A. I think so.

Q. And that wasn't the Van Bever piston?

A. No.

Q. Didn't you during that period test pistons having aluminum heads and cast iron skirts?

A. I don't remember.

Q. If you did that wouldn't be the Van Bever piston?
A. No.

Mr. Richey: That is all.

Redirect examination.

By Mr. Bruninga.

Q. When you said Exhibit 3-Q was a duplicate of that shown in the Franquist patent, did you have reference to the specific dimensions?
A. No, sir, the general structure.
Q. When you said that the Spillman & Mooers structure would have to be modified in order to operate as the Gulick patent structure, what did you have in mind, what modification?
A. Well, of course it would have to be slotted. You are referring to the Spillman & Mooers as shown in their patent?
Q. Yes.
A. And the point where the ribs are leading down from the head to the skirt would have to be raised to be more nearly central with the wrist pin boss.
Q. You have now in mind the specific structure shown in the Gulick patent, the web?

Mr. Richey: Object to that as leading.

A. Yes.

The Master: It may stand.

Q. When you said the Ricardo piston would have to be modified to have the mode of operation of the Jardine patent, what did you have in mind as the principal modifica-
[fol. 574] tion?
A. The Ricardo piston is not slotted and the slot would have to be added to the Ricardo piston to make it similar to the Jardine.
Q. I believe you said that with reference to the Maynard patent the closest reference was the Ricardo piston. Did you have in mind any slotting?

Mr. Richey: Object to that as leading. Let him say what he had in mind.
The Master: He has answered it.

Q. Well, the Ricardo doesn't show the slotting. What did you have in mind then?

A. I meant the Ricardo piston slotted would resemble the Maynard patent.

Q. And when you said on cross examination in your opinion the Chenard & Walcker approached the Mooers patent in suit, what feature did you have in mind?

A. As I remember it, in the patent to Chenard & Walcker it says that the ribs running from the head to the skirt or to the wrist pin bosses can be arranged in any way which would suitably give the desired results. If the ribs of the Chenard & Walcker were brought out to the wall of the piston, we would have very much the same result as in the Mooers with these ribs removed.

Q. How about the Franquist patent in that connection?

A. The same thing would apply.

Q. Now, you said that the Ricardo piston was a rigid structure. Why do you say that?

A. Because of the fact that it is not slotted and the rib and the skirt form a box section which is essentially rigid.

Q. What work would be required to make it flexible?

A. The slotting of the skirt and the change in dimension of the ribs, perhaps.

Q. Well, refer to that patent, the Ricardo patent, and state what dimension of ribs would be required?

A. The ribs shown at C in Fig. 3 might have to be thinned up some, and the skirt about at the point referred to in Fig. 3 by the letter E would have to be slotted.

Q. You are referring now to the specific dimensions as shown in the patent drawings, is that right?

A. There are no dimensions shown in the patent drawings, sir, but the general view would indicate the size of the sections.

* * * * * * *

[fols. 575-580] Q. I believe you said on cross examination that you knew about the Ricardo patent structure at the time you were in the Franklin Company. Was that before or after the Long piston came into use?

A. Before the Long piston came into use.

Q. That you knew about the Ricardo structure?

A. Yes.

Q. Do you know about what year that was?

A. I should say in 1915 or '16, along in there.

Q. Who submitted to you the Ricardo structure?

A. Nobody submitted the Ricardo structure, but I saw it in publications, and general knowledge of the art.

Q. You didn't see an actual piston, then, did you?

A. No, not that I remember.

* * * * * * *

[fol. 581] Q. Mr. Richey asked you on cross examination whether the flexibility of Exhibit 1 and the Jardine patent structure was one of degree, and I believe you answered yes. What did you have in mind when you made that answer, that the flexibility was the same?

A. No, it was comparable in degree.

Q. And how in degree?

A. One might be more flexible than another in degree.

Q. Well, the webs 25 of the Jardine patent are described as flexible. Do you find flexible webs at the top in Exhibit 1?

A. No; and Exhibit 1 is stiffer at the top than the Jardine.

* * * * * * *

[fols. 582-584] Q. How about the little webs or ribs on the outside of Exhibit 1, going from the head of the piston to the wrist pin boss, what is the purpose of that web or rib?

A. That is to stiffen the wrist pin boss, help support it in the head.

* * * * * * *

[fol. 585] Q. You were cross examined with reference to Exhibit 3-H. Can you tell me in what respect that piston differs from cast iron pistons used as early as the beginning of 1915?

A. One of the differences I had in mind was that this piston is not bushed in the wrist pin hole; while it was clearly common practice in 1915 to bush the wrist pin holes for the piston pin.

Q. How about the internal webs?

A. This piston is of rather a lighter construction than was used in 1915 in general practice, I should think, and perhaps has more webs on that account.

Q. How about the reliefs?

A. I should say those reliefs were in general use in 1915.

Q. How about the oil groove at the bottom of the ring lands?

A. Oil grooves were used in 1915 similar to that shown in this piston.

Mr. Bruninga: That is all.

Recross-examination.

By Mr. Richey:

* * * * * * *

[fol. 586] Q. Now, you have pointed out the difference between the Ricardo and Jardine, in considering the construction shown in evidence at Figs. 6 and 7 of Jardine. There is also the difference that the Jardine webs are moved out and carried on the edge of the head, isn't that so?

A. That is, as compared with the Ricardo construction?

Q. Yes; as shown in the Ricardo patent.

A. Yes, those are moved out.

Q. Now, you spoke of running pistons and noting where they rubbed and then cutting that away, as being a practice that was employed to fit the piston to the cylinder. That practice you employed along in between 1915 and 1920, didn't you?

A. Yes.

Q. And other engineers employed it, too?

A. I would say so.

Q. And that practice was employed in an effort to get the aluminum trunk pistons to work in the cylinder without slapping and scoring?

A. Yes.

Q. Now, you said that that would get down to the oval construction; that is correct, is it?

A. I said it might.

Q. Well, notwithstanding that, in 1922 you filed an application for a patent upon an oval construction, didn't you?

A. Yes.

Q. Well, I thought you said that in this cut and try business, or cut and rub off scheme that was employed back in 1915 to 1920, that that would result in an oval piston?

A. I said it might result in an oval piston.

Q. Notwithstanding that, you, in 1922, made application for a patent on an oval piston?

A. That is right.

Q. And at that time you of course made an oath that you considered yourself to be the inventor of this oval piston?

A. Yes.

Q. You did that in view of the fact that you now claim that the rubbing and the cutting away would have resulted in an oval piston?

A. I don't see that there is a crime about that, Mr. Richey.

Q. I don't say it is a crime. But as a matter of fact, that is reconciled by the fact that when you filed this application for a patent, you embodied in your claims more than the oval shape, didn't you?

A. Yes.

Q. That is, it was combined with other features?

A. Yes.

Q. Now, do you remember what other features? I show you a copy of your patent 1,557,625 that was issued from that application we have been talking about?

A. I think one of the features we had in mind was shown [fols. 587-588] in lines 55 and 65.

Q. Just what was the feature?

A. It says: "In operation the piston is placed in a cylinder with concentric portions of the pistons"——

Q. I don't mean to read it; just state what it was.

A. It really covers the fact that the piston expands in the direction of the wrist pin and draws the piston in on the thrust surfaces.

Q. That is what you really did in that patent, was to claim the combination of elements of which the oval construction was one?

A. Yes.

Q. And those elements themselves were old, weren't they?

A. Perhaps so.

Q. And what you consider to be patentable in the piston was this combination of old elements which had been combined for the first time?

A. I should think so.

Q. Then you do think that in this piston art the combination of old elements into a new combination is good enough to patent?

A. I consider that that combination was.

Q. Now, you were asked about the meanings of words "flexible" and "rigidity" and things of that kind. As a

matter of fact you, as an engineer, compare these pistons by what they do and how they do it rather than by the words somebody uses, don't you?

A. Eventually, compare results.

Q. And that is the way you work in the engineering practice?

A. Yes.

Q. And you were asked about this article by Mr. Gunn. There is a piston shown here marked--look at Fig. 3. That is a piston that had a liquid chamber around it, wasn't it?

A. I don't know whether that was a liquid or just an air space.

Q. That is an aluminum piston in which they tried to solve the problem of putting some kind of cooling system in the piston?

A. I should think so.

Q. That never made any progress, did it?

A. Not that I know of.

Q. Do you know when that was tried out?

A. No, sir.

Q. Over on the next page, Fig. 5, is that piston a Zephyr piston?

A. Essentially I should say.

Q. That was what you tried out at the Franklin Company and didn't get anywhere?

A. Yes.

* * * * * * *

[fols. 589-598] Q. And the prime consideration is that the piston shall transmit that power and do that rough work without going to pieces of breaking up in the cylinder?

A. That is right.

Q. What is the force of the blows on the top of the piston?

A. Why, I should say there is a pressure there as high, in 1920, as high as 350 pounds per square inch.

Q. And how often did that blow come on the piston?

A. Once every other revolution of the engine.

Q. How many revolutions per minute, would you say, in 1920?

A. Oh, say they ran 24 to 26 hundred revolutions per minute.

Q. How many blows per minute would that be, roughly?

A. That would be twelve or thirteen hundred blows per minute.

Q. And the direction of the piston was reversed how many times per minute under those circumstances?

A. Twice every revolution.

Q. Now, that blow tends not only to drive the piston down but to drive it over against one wall, doesn't it?

A. Yes.

Q. One wall of the cylinder. So when you consider giving a piston flexibility, lightening it and controlling the heat in it, all the time you have got to keep in mind that the first consideration is that the piston shall stand the blows and do this work; that is correct, isn't it?

A. That is right.

Q. And any combination that you form of a piston that would result in flexibility and the accomplishment of these other features, has got to take into consideration first that it does that work and withstands those blows?

A. That is right.

Q. And if you, in trying to make a piston flexible or make it transmit heat in the proper way, or lighten it, you sacrifice that first consideration, that is, doing the work, why, your piston would not be of any practical importance, would it?

A. That is right.

Q. Now, with a racing car the supreme consideration is development of power, isn't it?

A. Yes.

Q. And as far as preventing slap and those things, that is all of negligible consideration, isn't it?

A. To a degree, yes.

Q. Now, isn't it a fact that the racing car drivers have never used these split skirt pistons as far as you know?

A. I don't know of a case right off hand where they used split skirt pistons, except this one that has been used.

* * * * * * *

[fols. 599-650] PLAINTIFFS' REBUTTAL TESTIMONY

* * * * * * *

[fol. 651] RALPH MURPHY, a witness called in rebuttal by Plaintiffs, who, being first duly sworn, testified as follows:

Direct examination.

By Mr. McCoy:

* * * * * * *

My name is Ralph Murphy; age 55; place of residence Syracuse, New York. I have no occupation right now. My last previous occupation was vice-president, H. H. Franklin Manufacturing Company. During the period of 1913 to 1920 I was chief engineer. Previous to that, various positions in connection with engineering. Subsequent to that position as engineer, manufacturing and sales, general business outside of financial.

The Franklin Manufacturing Company maintains laboratories for testing of engineering problems, under the supervision of the chief engineer. They were under my supervision during the time that I was chief engineer for the company. Reports were kept of the activities of those laboraties. These reports were weekly reports turned in every week, which kept a running account of various activities [fol. 652] during the preceding week, and then there were occasionally special reports covering some special subject. The purpose of those reports was to supply information to various people and to also enable myself and the parties with me, to bring special facts to mind, if you would read the report some fact might come out that you might have overlooked.

During the period from 1915 to 1920, in general there were three people prepared those reports: Mr. Forsythe, Mr. Williams and Mr. Stellman; there might have been a few reports by someone else, but those were the main three.

The new things that came to the Franklin Company during the period 1915 to 1920 were submitted to us, where they were as a rule discussed and gone over. If we considered them worth while, we would go ahead and test them out.

We had quite a few problems of various kinds that we were testing out between the period of 1915 to 1920. During that period the main problem was pistons, outside of that there was what you might call a miscellaneous assortment of minor mechanical problems, but that was the major problem.

I had a great deal of test work done under my supervision on pistons during that period from 1915 to 1920. We tested the so-called Long piston. The first Long piston that was submitted to the Franklin Company was an aluminum alloy piston with four vertical and one horizontal slot in the skirt, and with an internal web at right angles to the wrist pin running down one side of the piston, being

cut off, but not extending down the other side. The rib was arranged at right angles with respect to the wrist pin bosses; it didn't touch them, it ran up the skirt toward the head, at right angles, halfway between.

I have examined the Franklin mechanical reports recently with respect to that piston. There were drawings that showed that type of piston, but I haven't got them with me. (Counsel shows photostat P-2912 Plaintiffs' Exhibit 43 to witness.) Yes, that is one. The first test we made of pistons of the character that I have just described was in July of 1918.

Mr. Bruninga: I object to this paper produced as not being an original; it is a photostat.

Mr. McCoy: Well, the witness has described the structure.

(Narrative continued) I do not know where the original drawing is from which this print was taken. I don't know [fol. 653] that that is the drawing of the original piston, but the original piston is that type. By "type" I mean the things I have mentioned, that it has these four vertical walls, those two there, these two here, and this one horizontal, and this internal ribbing down one side and not down the other side. In regard to the slots, that is pretty much a matter of memory. In regard to the rib, that is partly from my memory and the record of the test men.

I can't say when I first heard of Mr. Long. He was a dealer there. The first I heard of pistons that Mr. Long was offering to the Franklin Company was in the spring of 1918, April or May; I think probably it was in May.

Mr. Long wrote Mr. H. H. Franklin, the president of the company, that he had some piston ideas and development that he would like to take up with us, and Mr. Franklin replied and told him that of course we would be glad to know whatever he had and the best thing to do would be to send us a sample or some descriptive matter, or something like that, and I believe Mr. Long replied to him and then after that, these letters, or the matter was referred to me, and I wrote Mr. Long and asked him to send us a sample of the piston he was talking about. We got a sample such as we requested. It was the type I have just described to you, of the type shown in photostat marked P-2912. I have recently seen the original letters referred to by me. I can produce them. (Witness does so.) Here is Mr. Franklin's letter. (Witness produces a photostatic copy of a letter

dated April 17, 1918, addressed to E. C. Long, and signed by H. H. Franklin, letter being written on the stationery of the Franklin Automobile Company.) Here is the letter I wrote, dated May 9, 1918, addressed to Mr. E. C. Long, and signed by R. Murphy.

At the time of the writing of those letters, we were experimenting with pistons right along, and were anxious to try out new piston structures. We had been experimenting for some time prior, which work was practically continuous during that period. We experimented with pistons in 1916.

Mr. Long submitted another piston of a different construction to us in March, 1919. The characteristics of that piston, that differentiated from any other we had, as I remember it had six vertical slots, two horizontal slots, and internally there was a web extending across each wrist pin boss and at right angles out to and integral with the skirt. [fol. 654] Referring to Long Patent 1,872,772, that is the type of piston Mr. Long submitted to us. In March 1919 we put a set of those pistons on an engine and run the test on the block with it; it wasn't very satisfactory. A set was put in a car and run on a road test by Mr. Stellman; I believe Mr. Long was with him. During this first test the piston set up, froze the cylinder.

The very first test in 1919 of a piston shown in the photostat marked P-2912, the piston froze in the cylinder and was pretty badly damaged. The first sample was one piston. We continued to test those pistons through 1919, whether and to what extent we did in 1920, and beyond, I don't recall.

I don't remember any other piston structures different from the piston structures shown in photostat P-2912 and the patent 1,872,772 during that general period, up to the time stated, March 1919.

I don't remember Mr. Long submitting any changes in the piston shown in patent 1,872,772, though I have no doubt but what he did submit changes.

Mr. Bruninga: I move that answer be stricken out.

(Narrative continued) I would recognize copies of the reports of the tests made at the Franklin Company.

Q. I hand you a series of papers. Will you tell whether or not any of these reports that are handed to you relate to piston tests made under your supervision?

Mr. Bruninga: Before the witness answers the question I would like to have it shown what he knows about the tests, unless they were made by him personally——

Mr. McCoy: Well, this witness has testified the tests were made under his supervision. He got these reports made to him at the time the tests were completed, and they kept him informed of what was going on in the laboratory.

Mr. Bruninga: Let's see what he knows about these particular ones; that may all be. People are sick sometimes for two weeks; you are putting a lot of papers in his hands.

The Master: You want to examine these papers before he testifies?

Mr. Bruninga: No, I don't want to say that.

(Narrative continued) These are reports that were submitted to me. Here is a piston report of October 5, 1918, [fol. 655] the tests of which were made under my supervision at the Franklin Company.

(Reading from report) "ML20M" is the heading of the particular test called "Piston endurance run." "Special Long patented aluminum composition pistons. Weight including wrist pin two pressure-proof junior rings and one Inland top ring,—1.225#. A full set of these pistons were installed in the regular series nine engine and fitted to the cylinders such that the straight skirt clearance from just below the wrist pin down was from .002" to .003". The lands were of .025" clearance just as they were received. It may be noted that there was four oil holes in the top of each wrist pin boss and also eight oil holes just below the lower ring. The engine, thus built up, was placed on dynamometer #2, fitted with tinware, as in a car, and the test was carried out according to the method described in ML20M, so that results are comparable with those in the report. In this last test the pistons were installed in such a way that the ribless side was toward the exhaust side of the engine. The result: after ten minutes running, pistons 4 and 6 seized on the exhaust or ribless side of the piston. This test will be repeated with the same style of piston having a straight side skirt clearance of .005" and having ribless side of piston toward the suction side of engine. To build up the motor in this way and not be obliged to cut away the rib in order to make room for the connecting rod cap screw, the connecting rods will be turned to 180° and thus have their cap screw on the suction side."

This report was prepared by Mr. Forsythe. That report relates to the first Long type piston that we received. That piston structure is shown in Photostat Exhibit P-2912. I find in this exhibit the four oil holes in the top of each wrist

pin boss referred to in the report. I would say this print shows 16 holes just below the lower ring.

Here is the rib R I spoke of that extends from the right-hand side of the plan view of the piston structure, over across the top and down to the left-hand side, but on the one side it doesn't come down here; it is cut off at the top. (Witness marks drawing with letter "S" to indicate ribless side and letter "R" to indicate rib.)

The report marked July 20, 1918 contains a reference to piston tests. This test is headed "ML20N." "Piston endurance runs. A regular series nine engine was equipped as follows: (a) The new production series gauge cylinders, [fol. 656] (b) #1 cyiinder was equipped with Long patented piston with no rib on suction side, (c) other pistons were regular production magnalite having a clearance of .013" for a distance of 1⅛" below the bottom ring, and then tapering off to .003" at the skirt. The engine was then placed on dynamometer #1 and motored in for three hours at 1000 r. p. m., and jackets were installed and a piston endurance run was made under the conditions described in report ML20M. The run proceeded for 19 minutes when the power failed, thus taking the load off the engine. The horsepower did not drop sufficient to indicate a 'set up.' After allowing engine to cool off to room temperature, a second trial was made and this time the run proceeded for 19 minutes when the motor 'set up,' #1 piston 'set up' so tightly there was a large hole in the top of the piston; two of the other pistons seized slightly on the exhaust side near the skirt."

There are some pencil marks on this report. (Witness reads from report) The part labeled "b" was originally "#1 cylinder was a special patented one with no rib on suction side." In pencil it reads, #1 cylinder was "equipped with Long patented piston with no rib on suction side." Then the part of the paragraph where it reads, "The engine was then placed on dynamometer #1 and motored in for three hours at 1000 r. p. m.," following that originally was "tinware was installed," and so forth; in pencil it is written "jackets were installed," and so forth. Then later down in the last paragraph "That the explosion pressure punched a" was substituted in pencil, "And there was a large." I don't recognize the handwriting in which those changes were made. This report was made July 20, 1918.

Another test which we made is reported as follows: "ML4X 10,000-mile wear test. This test was completed

4/28/19, and the following parts examined for wear"—I will skip down to where it starts about the pistons. "The Long patented piston, with floating wrist pins and straight .003" clearance did not show excessive wear but one piston broke at 7500 miles and the retaining buttons and wrist pin holes had all worked loose, wearing down both the button and the wrist pin hole. One button was broken and one had the horizontal retaining lugs entirely worn away." The rest of it is about cylinders and valve lifters. The date of that report is May 3, 1919. Here is a further reference to pistons. It is headed "Long patented piston—purchase [fol. 657] order #35,509—type 'B'. 250 of these from pattern X-13 are on order at Walker M. Levett Company. To date 14 of these have been duly received. We are advised that shipment has been made of an additional 50 castings." The next paragraph is "Type (A). 160 castings have been received of our original order calling for 350 castings from our type 'A' pattern #P-2912. After receiving 65 castings we recalled pattern back from Walker Levett Company, this to enable bringing pattern up to latest blueprint; Upon completion, same will be returned them for the completion of our order."

This report relates to Type A and Type B pistons. Type A differed from other pistons in general in that it had four vertical slots and one horizontal slot and an internal rib extending down one side of the piston and not down the other. And the Type B piston was one in which there were six vertical slots and two horizontal slots with each wrist pin boss supported by a cross rib extending to the skirt and integral with the skirt.

Q. In other words the Type A is represented in the photostat P-2912 and the Type B is shown in the Long patent 1,872,772, is that correct?

A. It is that type, it is not that piston.

Mr. Bruninga: I object to that entire question as leading, particularly as to the type A. I don't think that the witness has identified that print as the type A.

(Narrative continued) There is one further reference to the piston here. The next paragraph is "Shipments. 6 Long patented pistons, Type A equipped with rings and wrist pins have been forwarded to our Detroit dealer, Mr.

W. J. Doughty." The date of the report from which these abstracts have been taken is May 3, 1919.

In 1917 you might reasonably say they were running tests on pistons continuously, one type or another on tests.

During 1917 most of our experimental work was confined to our regular production type aluminum piston we were using in production. Outside of that I don't know if I can recall specifically what piston we were experimenting with.

We experimented with cast iron pistons. We experimented with the Wainwright pistons. I don't know that we were during 1917 especially, but we experimented with those pistons. Of course there were various others, there were [fol. 658 composite pistions, there was the Zephyr, what we call slipper piston, and Zephyr piston. In 1918 the tests were carried on practically continuously. The same thing applies for 1919. I would say 1918 was probably a little bit slower than the other years because we were doing a lot of war work and we had to use the times available.

These reports containing the subject matter that I have testified to were all made to me either on or nearly the date shown on the report.

Mr. McCoy: We will put in photostats.

Mr. Bruninga: You offer them in evidence?

Mr. McCoy: Yes, I will offer these in evidence as Plaintiffs' Exhibits 42-A, B and C.

Mr. Bruninga: Of course I object to the evidence contained therein as hearsay.

Mr. McCoy: I mark the photostat produced by the witness, referred to as bearing the number P-2912, as Plaintiffs' Exhibit 43.

Mr. Bruninga: Of course I object to 43, being a photostat, not the original, the original not having been produced, and it has not been shown that the original is lost.

Cross examination.

By Mr. Bruninga:

I must have been chief engineer of Franklin from about 1913 to 1920, approximately. I do not know in what month I was promoted in 1920. My impression is it was in the spring of that year, but I am not certain. Mr. Stellman followed me as chief engineer, Louis Stellman, who is in this room. Mr. Stellman's job at that time was assistant engi-

neer. His duties were as assistant to the chief engineer, and as such act, carry on all the engineering processes. Mr. Stellman would carry on some of the engineering processes; I would do some directly, he would do some directly. He had something to do with the piston development. He was in rather close touch with it. I would say he did more work on them than I did, but I don't think he was in closer touch.

I can't say when I first met Mr. Long. He was a dealer for some time before this piston matter came up. I might have met him sometime before, but I might not. He was in Quincy at the time when I first met him, according to my recollection. I remember Mr. Long himself stating he was in Quincy. I don't know when I first met him; I don't remember. I don't recall that I met him before 1918. I don't [fol. 659] recall whether I met Mr. Long before I wrote that letter of April 17, 1918 to Mr. Long at Hannibal, Mo. I might have seen that letter before or after Mr. Franklin sent it. He might have asked me if it was all right to sent it to Long before he sent it, or might not.

The letter states: "I have your letter of April 13 and note with interest that you have a patented piston which shows up well in tests." I assume that meant Mr. Long made some tests and had written Mr. Franklin that he had a piston he was testing. I do not know what piston that refers to.

I know how this piston shown in Exhibit 43 is constructed. We have had pistons similar to that; it may have been that piston as far as I know, but I am not sure it was all the same detail, but it was that type. I do not know whether or not it was that particular piston that was tested out. When reference is had to piston A, it meant that type piston, the type in the respect I was speaking of, having the four slots vertically, one horizontal, and the rib inside cut off on one side of the skirt.

I can't say that I remember the piston shown in Long patent 1,489,499. I would say it is quite different from the one shown in Exhibit 43. It has got an extra horizontal groove cut through, and you see that rib, the internal rib was entirely different. The internal rib is different by the fact that the webs are from the head instead of from the wrist pin bosses. I don't remember that piston specifically.

I wrote that letter of May 9, 1918. Long had sent us a sample piston that I asked for in that letter. That piston was the type shown on this print here, Exhibit 43. I don't

know that it was that particular piston, but it was that type. When I say "type" I refer to the slot and the internal ribs.

Referring to Exhibit 43, I don't know who made the original drawing of which this is a photostat. It is specified as drawn by Clark.

Referring to Exhibit 42-B and particularly the report of July 20, 1918, the "Long cyl. steel body" refers to body structure of the Long steel cylinder. I don't know whose writing that is in pencil on sheet 3 of the report of July 20, 1918. I don't know whether that pencil writing was on there when I got the report. That must have been the Long piston, because it was on the piston without a rib on the suction side. That is the way I associate it because it states it has a rib on one side. Aside from the records, I couldn't [fol. 660] say that this particular piston was a Long, from memory, no. In that respect, my recollection is based upon that record. Without the record I would not remember the exact date or the exact piston of that particular time. The fact that it states it has no rib on the suction side is the thing that relates it in my mind to this type of piston, that, with the fact we had written Mr. Long for samples and had received them, but what connects it is the fact it is ribless type, ribless on one side. My recollection that it is the piston referred to in the report of October 5, 1918, is based upon page 2, sheet 3 of Exhibit 42-A. Special Long patented aluminum piston, slotted, and the reference to the piston having the ribless side; those were the two things. I don't find any notation of Long on Exhibit 43.

This drawing of July 9, 1918 is an experimental drawing. Why it was made, to be specific, I don't know.

I believe it is true that when we made that test of July 20, 1918, we made it on a piston sent us by Mr. Long. We might have made a drawing on July 9th because we might have had the piston. I don't remember if we made the drawing first and a test afterwards; I don't know. It might be unusual to make a drawing first and then make a test afterwards of a piston that a man sends us, and it might not; it is hard to say. That is not the usual procedure. I believe the piston we tested in July 1918, was one that was sent us by Mr. Long. The piston we tested could have been a piston that we made up ourselves from this drawing of July 9, 1918, Exhibit 43, but I doubt if that is what happened, because if after writing Mr. Long, for example, it seems to me we would have had a sample, and that

is the first mention of the piston test on these reports, which conforms to my recollection of a Long A piston, my memory as well as the records. I should say that this Exhibit 43 piston was called an A type piston in the spring of 1919. I think we were still testing type A pistons in the spring of 1919.

I knew about the agreement between Long and Franklin with respect to aluminum pistons, Defendants' Exhibit AA. That agreement was entered into on March 20, 1919, as shown here, and it refers to an application, serial number 281,175; that serial number 281,175 corresponds to patent number 1,872,772, which was filed on March 7, 1919.

We would be experimenting with the Long type A piston as shown in Exhibit 43, when piston covered by patent 1,872,772 is mentioned in the agreement, because we had been experimenting with it and had secured enough results [fol. 661] so we wished to go on with the experiments. It had been satisfactory only so that we wanted to go on with the experiments.

At the time of this agreement, the 20th day of March, or about that time, Mr. Long had submitted a piston to us like shown in this patent 1,872,772, but we continued to experiment with the piston as shown in Exhibit 43, after that. I do not know why that A piston was not included in the agreement.

Those are my initials in the upper right-hand corner of Defendants' Exhibit Z. I do not doubt but what I read that report. I should say that is a type B piston, that is what we call a type B. This type A piston was shipped May 3, 1919, or the preceding week. It was not until March 1919 that we received a piston with six vertical slots, two horizontal slots, and with the wrist pin bosses supported by a cross rib going over to the skirt and integral with the skirt, that is, like patent 1,872,772. I don't remember how it distinguished from that patent; I can't remember any details that might enter in it: there might have been a little more metal here or a little less here, or a rib here and not there, etc.

I can't say that the piston I just spoke of differed at all from Exhibit F; it may have in some minor respects but not in general shape. Exhibit F is the piston that the report of March 18, 1919 refers to; that is the same type piston. By "type" I mean that it differed only in small details. It may not have differed there, but I can't remember the

infinite number of little details. On some things I remember very plainly, others not so well. I have to rely on these reports in some respects, a good deal in regard to the date, I remember that to a certain extent.

If I said that in 1917 we were testing pistons continuously in production, I mis-spoke myself. I didn't intend to say in production. What I think, what I really said was that we tested a great many of the pistons, we ran tests on the pistons which were in production; we ran further experimental tests on those that we were using in production. That was done because the pistons used in production were not entirely satisfactory; we were looking for improvements. I think we ran tests on those pistons after we were using them in production, we kept on experimenting with them. It is natural to do that even for a year or so. I don't know what year we sent the Long pistons like Exhibit F out to the service men. I had nothing to refresh that date to my mind.

[fol. 662] I recognize Defendants' Exhibit C. I don't know that this issued on April 8, 1920, but I assume it did, or within a day or two of it.

On page 2 of Defendants' Exhibit C, it is stated "After April 15th the service department will be able to furnish Long type pistons in the standard size. These are straight pistons with two or three thousandths clearance. Their weight is approximately the same as standard pistons." I don't recall that the service department supplied pistons for engines in service after April 15th, but I can recall that they supplied pistons for engines. I can't recall specifically when all of the pistons—in fact, they supplied more than one kind of piston from time to time. I believe Long pistons were supplied by service after April 8, 1920. I don't know that they were like Exhibit F. After April 8, 1920, my opinion would be it would be type B piston.

Mr. Stellman had a great deal to do with keeping track of the development of the Long piston. I think perhaps he had more to do with it than I had, in detail. I believe it was under his immediate supervision at that time.

I said that sometime in this period between 1915 and 1920 we were testing slipper pistons. I don't recall where we got them. During that period we tested Wainright pistons, we tested the Zephyr piston, I believe a Mooers piston, we tested some composite pistons with aluminum head and

cast iron skirt, we tested some cast iron pistons, probably more than that but that is all I recall off-hand.

I don't recall what kind of vacuum tanks were being used on the Franklin car in 1918, nor do I remember who they were made by.

I don't know what kind of ignition system was used on the Franklin car in 1918, neither do I know what kind of speedometers they were using. I do not know the difference between a Stewart No. 2 and a Stewart No. 3 vacuum tank. I do remember what kind of a Long piston was used in 1918, and also taken from my records. I have to rely on the records to a certain extent, yes.

What the record says, plus what I remember of the piston, plus the drawing, goes together.

I arrived here in Cleveland Wednesday morning. I am going to send my bill to Richey & Watts for my trip over here, for expenses plus compensation for my time. I have investigated these Franklin records, and I expect to send a bill for the time spent by me.

Mr. Bruninga: That is all.

[fol. 663] Redirect examination.

By Mr. McCoy:

I don't believe I can recall from my mind whether or not these facts that I have read from these reports into the record were true and correct as of the time when that report was given to me, aside from the records. I know that we were running these kind of tests all the time. I know that these things were under tests, but I can't remember back that time in my mind, no, I take the date from the records. Those records refresh my recollection as to the facts reported in them. I do not remember whether the first Long pistons of the type B were relieved over the bosses.

Mr. McCoy: The letter identified by the witness, Franklin Company letter addressed to Mr. E. C. Long and signed by R. Murphy, dated May 9, 1918, is offered in evidence as Plaintiffs' Exhibit 44; the letter dated April 17, 1918, addressed to Mr. E. C. Long, signed by H. H. Franklin, is offered in evidence as Plaintiffs' Exhibit 45; the reports referred to by the witness, marked Plaintiffs' Exhibits 42-A, B and C, are offered in evidence under the same numbers;

and the photostat referred to by the witness is offered in evidence as Plaintiffs' Exhibit 43.

Mr. Bruninga: I object to the photostat, for the original is not produced, and it not having been shown the original is lost. That is not a formal objection, either, because the top of this rectangular part in the lower right-hand corner is so faint in some parts that the objection certainly is well founded.

The Master: I will receive it subject to proof as to the disposition of the original, or something so that it can show this can be read, this is not readable.

Mr. McCoy: Yes, your Honor, also the photostat is offered as the paper to which the witness has referred to refresh his recollection.

The Master: It may be so received to that extent.

Mr. Richey: And would of course also be competent as in the nature of a present day recollection drawing, in any event.

Mr. McCoy: That is all.

[fol. 664] STEPHEN R. CASTOR, a witness called in rebuttal by Plaintiffs, first being duly sworn, testified as follows:

Direct examination.

By Mr. McCoy:

My name is Stephen R. Castor. I live at Jordan, New York. My age is 45.

I was employed by the Franklin Company, Syracuse, New York from 1916 until October 1918, and from 1920 to 1931. I just came there as a draftsman; afterwards chief draftsman; afterwards designing engineer. My clerical duties consisted of making out a drafting room report; it was incorporated in the big report, each department of engineering submitted their report. Those reports were referred to me; they weren't referred to me directly, they went to the stenographers and were written up, then the stenographers worked under me. When I received the reports they were filed away under the custody, ordinarily, of the head stenographer. She was under my supervision as long as I was chief draftsman or designing engineer.

I was acquainted with the experimental routine of the

company over a period of a good many years, that is anything that was developed in the experimental department why, we would have the job of designing it and putting it into drawings and records of the same. I had that duty between the years 1916 to 1918, inclusive, that is, up to October 1918, when I severed connection with the company.

I have had occasion recently to review those reports of 1916 to 1919; I went over them very carefully. The first reference in those reports to tests made on Long pistons was in the July 1918 report. The type of piston referred to in this report had a rib across the head in between the wrist pin bosses and extending down one side. The rib was cut off on the other side. On the first test, the piston was installed with the ribless side on the suction side of the motor. The piston had a stiffening ring at the bottom, and it had four vertical and one horizontal slot sawed in the piston. All of the slots at the side of the wrist pin bosses and two of the slots on one side extended from the bottom of the piston up towards the top for a ways. The rib was in between the wrist pin bosses, and the slot was at each side of the wrist pin boss, the ribs like this, two slots went up this way, two this way (indicating). Two of the slots went up and then the other two slots started from underneath the lowest ring, somewhere in that neighborhood, and ex- [fol. 665] tended down for a ways, and at the top of those two slots there was a transverse slot that joined those two slots. That was on the ribless side of the piston.

I could identify drawings of this piston from the records that I examined, and in accordance with my recollection. That drawing was our P-2912; I mean the Franklin drawing. Mr. Clark made that drawing and it was checked by Mr. Roth. That drawing was made under my supervision on July 8, 1918. I would recognize that drawing if I saw it.

(Witness examines drawing.) This is the drawing to which I referred, photostat, Plaintiffs' Exhibit 43. I can't say definitely where the original of that drawing is; it is perhaps in the files of the Franklin Company.

I couldn't tell from my own knowledge, independently of any markings on this drawing, whether or not a drawing of that general character was in those files on or about July 9, 1918.

(Objection by defendants.)

This drawing, Plaintiff's Exhibit 43, P-2912, was in the Franklin Company files from July 9, 1918, if it is still there; that is what we call an experimental drawing. There is no very careful account kept of those drawings after a number of years, say like 10 years or so, they might have been thrown out.

Mr. Bruninga: Object to that as a conclusion of the witness.

I did not make a search for the original from which this photostat P-2912 was taken. I can't say under what circumstances that drawing P-2912 was made; it has been too long ago to remember it.

I know of my own knowledge of another type of piston submitted to the Franklin Company by Mr. Long. We had a piston that we were in production on a great many years and it had a rib across the head in line with the wrist pin, and two ribs at right angles to the wrist pin bosses, which connected the wrist pin bosses to the side walls, and there was six slots running from the bottom of the piston up to below the lower piston ring, which divided the periphery of the skirt into six pieces, and four of those pieces were supported by the two struts, we called them. I can't tell you of my own knowledge when first I saw a piston of that character, but our records show that in March, 1919.

[fol. 666] Mr. Sutherland: I object to what the records show. The records themselves are the best evidence.

Mr. McCoy: The witness has testified he examined the records; they are the factory records produced under his supervision.

(Narrative continued) The records show that in March 1919 a piston of that character was tested by the Franklin Company. I wouldn't attempt to say from my recollection, because it is 15 years ago and my memory isn't so good as that. The record refreshes my recollection as to the date. March 25, 1919 I believe to be the correct date; there is a description of that piston.

So far as I could determine definitely, March 15th there was a report that might have had to do with that same piston.

Q. What was the character of that report?

Mr. Bruninga: I object to that unless the report is produced.

Mr. McCoy: I think we have it here.

A. It speaks about a test made in the laboratory on the pistons, .002" clearance.

(Narrative continued) The results of that test were that it had a tendency to set up and they thought it was a little stiffer on account of the baffle plates not allowing quite enough oil to go down the piston and the cylinder walls.

Mr. Bruninga: I object to what was thought.

(Narrative continued) In 1923 I went over the records, looking up the records of when the first Long pistons were brought in. I have made other investigations since 1923; I should say twice besides that at least. All of these investigations, as to the first time that I found mention of a Long type piston of the two vertical webs connected with the skirt wall that is separated by six vertical slots, agree; I found the same results each time. The date of that was March, 1919.

I also made some investigation of those reports to find the first time that E. C. Long or E. C. Long pistons are mentioned in the reports, and found that it was July 1918. I had previously made investigations to locate that fact.

I am the Stephen R. Castor who testified in interferences 49,569, 49,570 and 49,571.

[fol. 667] I recognize Plaintiffs' Exhibits 42-A, B, and C. They are the experimental and mechanical laboratory reports for the Franklin Company. Frank Chadwick, the head stenographer, had charge of the files for these reports Exhibits 42-A, B and C, at the time I was working with the Franklin Company, on October 5 of 1918 and July 20, 1918. They worked for me, except when I wasn't there. I left the employ of the company in October 1918.

Mr. McCoy: Direct examination closed.

Cross-examination.

By Mr. Bruninga:

I testified in an interference in which Mr. Richey and Mr. McCoy were both counsel for the same side that called me. I said in that case that I had also made searches of these records of the Franklin Company. I said at that time that

the first record that I was able to find was dated October 5, 1918. I have now made another search and found a set of reports, Exhibit 42-B, dated July 20, 1918. (Witness examines exhibit.) The reason I didn't find the report of July 20, 1918, is because the piston was identified by a pencil note on it, and it was easily overlooked. You see it is marked with a pencil, it says "Equipped with Long patent piston." That was overlooked. In the other reports it is in the typewritten. I don't know if that pencil notation was on there in 1926 when I looked over these records—I think it was. Mr. Louis Stellman put it on, it is in his handwriting. It being in pencil led me to overlook it. I just looked for reports that had Long's name on them. I looked the reports over very carefully this time to see if there was any description we could identify as Long's. I didn't look so carefully in 1926. I doubt if a still more careful search would uncover something earlier. I would say I have all the reports of tests of Long pistons before this Court.

I went over 1918 twice just recently, and 1917 very carefully, and no record was found marked "Long" of that I could identify as Long.

I left the Franklin Company in October 1918. I don't remember the exact date. I couldn't say whether the first or the last. It might have been that the October 5, 1918 report was not under my direction. That is true of the May 3rd, 1919, report.

I have a business of my own now, that is, I am selling insurance. I have been away from the Franklin Company since August 1st, 1931. I started at the Franklin Company again in May 1920. I can't say whether it was before or [fol. 668] after the date of May 3, 1919, Exhibit 42-C. It is probably correct that the only report filed under my supervision is the one of July 20, 1918, 42-B.

I met Mr. Long many times. I can't tell you when I first met him. I don't think I met him first on April 1st, 1916.

Q. You saw that six-slotted, across-rib piston along the order of Exhibit F in 1916 or '17, didn't you?

A. It is so long ago I can't remember.

Q. Well, you wouldn't say you didn't see it as early as 1917?

Mr. Richey: Object. He said he didn't remember.

Mr. Bruninga: Don't object because I am cross examining

this witness on a point, you simply object and don't state what he remembers and what he don't.

Q. You wouldn't say you didn't see that as early as 1917, a piston of that type, would you now?

A. There is no record of having one around the place as early as that.

Q. Didn't you tell Venner about a year ago you thought you did?

A. No.

(Narrative continued) I haven't seen Venner in seven or eight years. Yes, I know William Venner, the fellow with the St. Louis dealer. I don't remember seeing him recently. I don't remember seeing Venner for a long time.

I did not see that particular type piston like shown in Exhibit F before 1918. As I have told you, I should say the first I ever saw it was in 1920 at the Franklin Company. I might have seen it in 1919. Now, what's the use of asking me? I can't remember that I saw that, I am not going by my memory, I am going by records that I have looked over; I am not going by memory at all. That also applies to this drawing, P-2912. I don't remember of Clark making that drawing, except from seeing his name on it; that is how I tell that Clark made it. I probaby did see him make this drawing. I don't have any recollection of seeing him make it, but I can swear he made it because his name is on it. I can swear a certain man checked it because his name is on there, and because it is in their handwriting. The handwriting on that exhibit (indicating exhibit) is that of Clark; there is his peculiar marking, which he often signed. Because of the marking on this drawing, is the only way I can tell that it was made at the Franklin plant. [fol. 669] That drawing was made as a record of the piston we was going to test. I know that because it was our usual practice. We would get a sample in, we would take and make a drawing of it, a record of it, and then we would test it.

I know that that drawing, Exhibit 43, P-2912, was made in the Franklin Company. I know that it was made from a piston. I probably saw him make it from the piston. As I told you, that was our practice, we would get a sample in, send it to the drafting room, make a drawing, an experimental drawing and send it down to the experimental room

and test it. That is good reasoning. I probably did see that drawing made from a piston.

Q. Can you swear that you did? You can't, now, can you?

A. (No response.)

I am so absolutely certain that that drawing was made from a piston, because I have been through that year after year, year after year, you do the same thing over and over again, and you know that is the way it happens. That is the way I reason that this happened. That is my belief.

I don't remember of ever seeing a piston like shown in drawing P-2912, Exhibit 43. The records show that a piston like that was on test at the Franklin Company. I don't know from my own knowledge that it was, but from what the records show.

The first piston that came to Franklin like Exhibit F was in 1919. I first saw it in 1920. I take that from the records where it is very clearly described, drawings of it in the reports. I take all of that from the reports. I did not make the report that the piston is described in.

Q. But it bore a certain date and you took that, you reasoned the report was correct, that the report had that date put on, and then you determine in your own mind that that was the first time you saw that piston at the Franklin Company, isn't that right?

A. Yes, we have to go by those reports.

(Narrative continued) I think it was Mr. Edgerton who asked me to make a search of the records in Franklin in 1926, when I testified before; it was someone from Richey & Watts' office, and I made the search of the records. I got paid for doing that work at that time.

I testified in Cleveland at that time. My expenses were paid. They said if I didn't come they would subpoena me; [fol. 670] I didn't have any objection either way to coming; I was neutral. I would rather not come in 1926, but I didn't refuse to come.

Q. In the previous deposition you testified as follows, when the question was asked you by Mr. Richey: "You declined to come here voluntarily to testify until you were threatened by subpoena, and then came to save the trouble and expense of a subpoena, didn't you?" And you answered, "Yes." You didn't understand the significance of that question, did you, from what you previously said?

A. Yes, I didn't want to come.

(Narrative continued) I didn't refuse to come; no object in my not coming.

Q. I notice that you were able to call off without ever looking at Exhibit 43 "P-2912, July 8, 1918." You have a good memory, haven't you?

A. Pretty good.

(Narrative continued) I have a very good memory for short times; I can't remember 15 years back, though. I might remember the drawing P-3984 from the Franklin records if I saw it. I have seen the original of Exhibit BB in the Franklin records. The draftsman's name was Sometimer. I knew him. (After examining drawing.) I can't make out who checked it; he didn't write very strong. Yes, I have seen that drawing. I brought that drawing with me; I didn't turn it over to Mr. Richey or Mr. McCoy; I have it here in my brief case. (Witness produces blueprint called for.) I should say that this blueprint that I have just produced was made from the same tracing as Exhibit BB.

Mr. Bruninga: Well, in order that we may be sure about it, I will offer this blueprint produced by you as Defendants' Exhibit BB-1.

Mr. Richey: I object to it as duplicating the record.

Mr. Bruninga: Well, if you agree it is a duplicate I will leave it out.

Mr. Richey: He said it was. I will agree to it if the witness says so.

(Narrative continued) They are duplicates, I should say. I have some blueprints of other types of pistons submitted by Mr. Long. (Witness produces blueprints.) This one isn't very good because the date doesn't show. This date was 1920, something like that. Those aren't submitted by Long, you understand, they were made in the Franklin plant.

[fol. 671] 1/16/20, of course that isn't very good evidence because it has been marked with a pencil. That looks as though it had a steel skirt on it, or cast iron skirt, probably not a Long piston; that is a different type of piston. That is not a Long. It has got a cast iron skirt. I thought that was a Long but it is not.

That is the only Long type piston drawing I brought

along, only our regular production drawing which is similar to the one you have.

I haven't got a thing back of July, 1918, that I found relating to Long pistons, or that, as they are read over carefully, might relate to Long pistons. If I had, I would give it to you. I am neutral, I don't care. If Mr. Long has it coming to him, I hope he gets it; that is where I stand on it. I tried to bring in the truth of the records as we found it there. I haven't a thing that would help your case at all, or anything that would hurt it. I haven't anything to help the case because I don't know as it can be helped. As far as I am concerned, you see, I don't know all the situation. There might be lots of angles I don't know about outside of the Franklin Company. I wouldn't say that you are going to lose the case, I don't know. You may have lots of evidence somewhere else than mine.

I have no drawings or sketches that I found in the Franklin Company that go back of the year 1920, except the 1919 records which have been produced.

Referring to Exhibit BB-1, that piston not put into production. I know that. This is a drawing of the piston. When Mr. Long brought the piston there, undoubtedly that was the drawing that was made, and I get that from the record, the same practice we had before. That was the practice over there, and I know from previous practice that was ordinarily followed.

I hope my expenses are being paid here. I haven't investigated those records and come here and stayed around Cleveland for nothing. I expect to be paid.

Mr. Bruninga: That is all.

Re-direct examination.

By Mr. McCoy:

I don't know whether or not Mr. Stellman has recently been over the records of the Franklin Company. To my knowledge, Mr. Stellman has not been over these experimental and mechanical laboratory reports within the last two years or three years.

[fol. 672] Mr. Edgerton put the small metal clips on the side of these papers. I saw him put them there, he and I were looking them over. They were not on there before we looked them over. The facts that I have testified to are

from my best knowledge and recollection of the facts as to the dates I have testified to.

Mr. Bruninga: I want to tell the witness "knowledge" means what you know, not what you figure out. Let him answer the question now.

(Narrative continued) It is necessary to figure it out, as I say, you have been through it for years and years.

I had been over these records before Mr. Edgerton went over them with me, not as carefully as I did this time, but pretty good.

Mr. McCoy: Re-direct examination closed.

Recross-examination.

By Mr. Bruninga:

Franklin used the Long piston up to the series 12, which was about, say 1929, from 1920 to 1929; about eight years. I don't know how many cars they were used in, I haven't any record but there was quite a good many cars made during that time. As to our average production, some years we made 10,000, some years they only made six, may be eight; eight would be a fair estimate. For about eight years those pistons were used. On an average of 8,000 a year, that would possibly make 64,000 cars the Long pistons were used in, and with six cylinders to a car. That would be over 350,000 Long pistons. We discontinued using them because in the 135 we went to the 3½" bore, high compression, and the Long pistons wouldn't stand up; we got beyond the limit of the Long piston; scored on the strut. Then we changed over to the Invar Strut. That was about 1929.

Redirect examination.

By Mr. McCoy:

The clearance we used with the Invar Strut was about three thousandths, two and a half, I think two and a half we ran them for a while, two and a half to three thousandths. At the time we changed from the Long type to the Strut type, steel strut type piston, we were fitting the Long pistons about five thousandths.

[fol. 673] Recross-examination.

By Mr. Bruninga:

And the sole reason we changed over to the Strut type piston was because it was better than the Long type. Patent litigation had nothing to do with it, at all.

Mr. Bruninga: That is all.

(Adjournment to following day.)

(9:30 A. M., Saturday, February 4th, 1933, the hearing was resumed.)

Mr. Bruninga: I have here a photostat of a letter of Anna Landon Duke, dated October 17, 1932, and reading as follows: "Iowa City, October 17, 1932. Mr. J. H. Bruninga, St. Louis, Mo. Dear Sir: I have carefully gone over the sheets of records which you sent me and have placed my initials 'A. L. D.' on the back of the ones that I recognize as work done by me at the W. K. Weems place. Trusting that this will give you the needed help, I am, yours very truly, Mrs. Anna Landon Duke." The initialed photostats of V-1 to V-7 of the pertinent pages from those books have been offered in evidence in lieu of the original books, and I understand counsel is willing to agree that if Mrs. Anna Landon Duke were called as a witness, she would testify as noted above.

Mr. McCoy: That is correct, your Honor. I don't think it is necessary to introduce it in evidence.

Mr. Bruninga: I will offer the photostat as 5-J.

Now, instead of the answer in the Simmons case, I would like to introduce in evidence, as soon as I have it available, a copy of the record before the Court of Appeals in that case in Equity No. 3510. I believe that will be for the convenience of this Court, and this Court has considered the matter anyway, in connection with the question of whether plaintiffs can introduce evidence as to the connection of Sterling Products Company with this case. I expect to obtain another copy of that record in the next few days, and I will introduce that in evidence now under the same designation 5-I.

Mr. McCoy: You had some witnesses, the names of whom you were to give us.

Mr. Bruninga: With reference to Mr. Schoengarth at Ironwood, Michigan, I am going to make every effort to get Mr. Schoengarth and one or two supporting witnesses [fol. 674] down here. I understand there is a man by the name of Garner, the other one I don't know as yet. I am going to try my best to have them down here instead of having counsel go up to Ironwood.

Mr. McCoy: We would like to have the reservation that the deposition be taken at such time as Mr. Richey may be able to attend.

Mr. Bruninga: Of course I will do that.

The Master: Yes, certainly.

(Counsel for defendants agreed to furnish counsel for plaintiffs addresses of witnesses to be called.)

(At this point testimony of Gulick, Record pages 699 to 704, was taken.)

JOHN L. BURNS, a witness called in rebuttal by Plaintiffs, being first duly sworn, testified as follows:

Direct examination.

By Mr. Richey:

My name is John L. Burns. I live at 225 Reed Avenue, Syracuse, New York. I am employed by the Franklin Company, The H. H. Franklin Company of Syracuse, New York. I have been employed by them for 28 years anyway.

My first job for them was as a tire man; the next job was a roadman out for service, until 1907. From 1907 until 1910 I was a sales department territory man. The year of 1911 I was superintendent of the New York branch of the Franklin Automobile Company, a selling organization of the H. H. Franklin Manufacturing Company; and in 1911 wound up my work there and I became a member of the engineering staff, engineering department at the plant in the capacity of chief inspector, chief tester in the testing of cars. I served in that capacity until January of 1918 when I became a member of the experimental division of the engineering department. From 1915 up until

1918 my job primarily was to improve the car, that was the work that I was supposed to take up, as I went into the experimental room from the testing division, and that work was to—well, anything that gave grief on the road, or anything that was hard in manufacturing, my job was to find improvements to make the car a better car. That continued up to now.

[fol. 675] The nature of the trouble with respect to pistons from 1915 up until 1920 was noises, set ups, slaps, piston slaps and piston scoring. By "set-ups" I mean when the clearance is insufficient or the design of the piston does not allow the walls of the piston to yield and give and make a smooth operating job, instead of that there is something there that is rigid, we didn't know what was going on for a long time, and the alloy of the metal would pick up on the cylinder wall, and then it would build up, set up, that was due to trying to make the piston a quieter job in some cases, in other words, it slapped with the tolerances that were required to make it not score.

When this "set-up" occurred, metal from the aluminum piston would deposit on the cast iron cylinder wall. When it did that, you just stopped and pulled your motor down, and put in new pistons, as a rule.

Up from the series 9-A, the 1916 model, up to 1919, we were using an ordinary aluminum piston with a rib on the inside of the skirt, and there was all kinds of modifications of the original. The original was just a plain skirt piston with oil ways running in some cases in the form of a thread, in some cases just cylindrical rings attached around it; that was the standard piston then. Then they got into slotting, then they came in to put in expanding rings on the bottom of them; oh, there was various things to try to make the job satisfactory. Nothing ever was done, though, to make the job satisfactory from that original type of piston.

Comparing Exhibit B piston with the type pistons I am speaking of, that is the original piston that we speak of in the 9-A, and that is the one I spoke of as the original piston that had given us so much trouble. The expander ring wasn't the answer, it wasn't consistent, you could put an expanding ring in the first time and the results you got just prompted you to go further with it, and the final analysis was it wasn't satisfactory; it caused dragging

and power losses so tremendous that in some cases was due to the un-uniform wall tension of this spring that was slid in. The piston we put the ring in apparently would be better than the original piston without a ring, but there wasn't any of them that was a satisfactory piston. It compared in structure with the Exhibit B practically the same as that except they would turn a little bit of a way inside there and snap this ring in it; it would be a regular piston, only we would take that out of cars and have a little bit of a recess made in there to hold the ring in position; they [fol. 676] would be the same piston, you understand.

Q. Will you state whether or not you yourself were working on this problem of trying to cure these troubles?

A. My gosh, everybody was working on them. My job was inspector of the testing shed, I turned down the cars for the engine being noisy, and the experimental department, which was another division in the plant, would come over and try to give us a little help with the grief we were having, and make various suggestions, and bring over different things for us to put on.

(Narrative continued) Besides the schemes I have named, that were used to try to rectify these troubles, we used to put an expanding jack inside of them, and throwed them aside, discarded them; and the fit of the wrist pin was changed from time to time, feeling, well, I suppose if we put a little drag on the wrist pin fit, the clearance, it would change the picture a little bit. It was just one continuous thing to another; every week somebody had a suggestion and we would follow it through. And to make the aluminum piston stay in the Franklin engine, that was the whole thing, because it had some features—light weight over the cast iron; it was a nice piston to think about.

Other schemes we used were: the expanding rings, and the slots, and things like that. That would cover it. In other words, take a piston like that, and give it another thousandth or thousandth and a half, or two thousandths, or right in that area through there, which seems to be the bug-a-boo of the set up. For an inch below the bottom ring, we would relieve it; between the top of the boss holes and the bottom ring we would change the area there.

As to other types of pistons tried by us besides this Exhibit B with the ring, up to January, 1918—now, my job

was on that original piston, and its various modifications; up to January of 1918 it was always with this original piston in various slots and expanders and jacks and clearances, and all that stuff, but after January, 1918, I became a member of the experimental division, that department was the department that was trying all the different samples submitted of various makes and alloys and those things, and iron and cast iron pistons, with compromises—the Wainright cast iron, and the slipper type, and Dahl metal, they used to designate it, and Zephyrs, and all the other pistons [fol. 677] that was coming, that was coming up, they all had to be tested. I made some of the tests on these pistons. If I didn't supervise the installation in the car or in an engine in the car, why I probably drove the car on the road, because that was one of my jobs, was taking something that would make the car a better car, that was my job to improve the car.

In January 1919 there came to my attention a piston of Mr. Elmer C. Long. I made an installation in a car owned by the company but driven by Mr. Murphy, our chief engineer, of a set of pistons that was handed to me as Long pistons.

Describing that piston, it was a lot like this one (indicating Exhibit B) except it had a T-slot in it, that is this vertical slot ran into a slot that was around this way, and on the inside it had what they call ribs, on the inside of the skirt. That is my first recollection, you might say, with the Long piston, as I knew it.

Mr. Bruninga: Have him describe that piston a little more fully, Mr. Richey.

That is the way I remember the piston, the slots in it carried up through, because our slotted pistons had those slots like this (indicating Exhibit B). This Long piston was carried square, running into the other slot.

Q. Now, what if anything have you to say regarding whether or not there was a U-slot in that piston, if you remember?

Mr. Bruninga: Objected to as leading. The witness has said there was a T-slot in it.

(Narrative continued) There was several slots, but the difference between that slot and our slotting was that the

vertical slot ran up into another one, where ours stopped in the middle of the skirt, approximately.

Comparing the drawing, Exhibit 43, with the piston which I installed in the car in January, 1919, this is the type piston that I speak of. By "type" I mean this slotting and all this ribbing and the general appearance of it. The Exhibit 43 piston is the piston I installed. I installed a set of six in the car, six-cylinder car. The first time I ever saw one of these pistons like shown in Exhibit 43, was January, 1919. The car was driven by Mr. Murphy, he was driving, he always drove a car previous to the announcement of a model. In other words they would build a car and Mr. Murphy would get it to try out the different things for a [fol. 678] period of six or eight months previous to the announcement of that model. In other words, he tried out the preliminary car.

The pistons installed in that car were noisy, it wasn't wholly due to the design of the piston, the cylinders were worn. I operated the car with the pistons in it, in the engine. When I saw them they were noisy, had slaps. The clearance was supposed to be 3-5 because the cylinder was supposed to be gauged, in other words, the piston should have been 3.245, 3.247, but the cylinder was worn two and three thousandths, some of them, so that it had more than the clearance that it was supposed to have, but the particular cylinders had something else in them, they wanted to continue testing, that is why they were left on with this type.

There also came under my observation a piston of Mr. Long's different from the one I have been talking about here in Exhibit 43. In the middle of March, 1919, Mr. Long came to the factory, because he walked into my department with Mr. Stellman, and Mr. Stellman introduced him to me, and he had—well, they had a set of pistons, I don't know whether Mr. Long had brought them, but it was a set of pistons they had with them and Mr. Stellman told me to get a car, sales department demonstrator, and get the cylinders and pistons off it immediately, they had a set of new Long pistons they wanted to put in this car and were anxious to get away before the day was over, wanted to leave on a trip. And it was a set of pistons that was different than the set of pistons I put in Mr. Murphy's car.

The piston shown in Exhibit 43, that we put in Mr.

Murphy's car didn't have any designation, as I remember it, at all.

The piston that was brought to me in March, 1919 was my first acquaintance with the piston that we later knew as a Long piston. That is, it had a strut going, surrounding the wrist pin boss, carrying over to the skirt, and it was a straight ground piston; anything before that was always taper ground, any piston regardless, and that was the first contact I had with a straight ground piston. That is about all I remember about it; of course, it had slots carried on through. There must have been six slots, one in the middle, on each side, and up through the side with the wrist pin there were slots. There wasn't any skirt webs running vertically, there was webs in the head, and there was what—if you call them webs—there were two struts carried over [fol. 679] around the wrist pin boss, and over to the skirt. There was horizontal slots in it, the head was separated from the skirt, except the ribs that carried from the head down to the wrist pin boss.

Comparing the drawings of the Long patent 1,872,772 with the piston that I saw in March, 1919, this is the piston here.

After Mr. Stellman and Mr. Long brought me those pistons, we installed them in a demonstrator, that was a car, it was a practically new car, had approximately 1200 miles on it; in other words, it was well broken in, and we removed the pistons and cylinders that was on it and made an installation of new cylinders and pistons. I supervised the work, that was my job; I had mechanics there working on it. I was given the assignment by Mr. Stellman to get that job through.

Besides the mechanics and myself, Mr. Long was there all day. Mr. Long didn't have anything to say about these pistons; he just relied on my work to see it was done, there wasn't nothing to do in the line of fitting, it was simply a case of taking off the cylinders and the yokes and the pistons and making a proper installation of the new pistons, and dropping the cylinders on and coupling up the affair—well, it was in the middle of the morning when they came in and they went out in the late afternoon, so you see there couldn't have been an awful lot of fitting of any description; simply a case of putting on what he brought.

I remember Mr. Long saying he had something there that

wouldn't set up. He said, "I have a piston here that won't set up." That is the remark he made.

The pistons in the car in which we installed this Long piston like the one shown in the patent, were Long pistons with a T-slot. That had been put in in the plant, that had been put in the car in the engine assembly, and my job was to get that car that was operating with those pistons and bring it down in the experimental room and remove them and put on the new pistons Mr. Long had. The pistons in the car before we put in the new pistons were like Exhibit 43. The clearance given the pistons like shown in the patent was .002" straight ground. That piston was known at that time as "Special Longs." The piston that we put in that is like in this patent that you are talking about was known as "B." Later on the piston shown in the drawing Exhibit 43 was called "A."

I know nothing further about the history of the type A Long piston.

[fol. 680] The type B piston, from that installation there, was worked on practically 100 per cent until the time it was installed in production. It was probably installed in production in the fall or winter of 1919, and it continued in production until 1928.

There were records kept of the tests in the laboratory and in the engineering department between 1915 and 1920. Of course, from January, 1918, I wrote a report weekly of the activities of the floor or of the car end of the experimental department, and that was incorporated in a whole report of the entire engineering department, laboratory, mechanical department, and laboratory tests, the body division, and one other, and they were all incorporated in one report. In other words, my report and somebody else's report from the mechanical lab and the chemist, he put in one, and the body division put one in, and that was all incorporated in one report, and then a copy of the whole report was sent back to the experimental department, and I would check over from week to week just what the whole report was, because there was something that was carried on in the other departments, so that an engineer, if he was smart, he would look the whole report over. Every week a copy would come back to me containing my report with the others.

In connection with the physical work of writing up these reports, I wrote the car end of the division; that is, if there was anything done on a car, any improvement made, or any

dismantling or any additions made to the experimental cars, that included mileage cars, Mr. Williams' car, Mr. Murphy's car. My job also was to keep Mr. Franklin's car in first-class running order; anything that was done was reported on because we used to use these cars for various experiments, and naturally I would write them up at the end of the week what was done, to keep everything before the engineer. These records were the official records of the engineering department of the Franklin Company. They were always relied upon by the engineers as such.

(Short recess taken.)

Those reports speak of vendors of various things coming to the plant, with certain pieces. Now, supposing there was a piston pin brought there by a vendor, a manufacturer, a representative of the engineering department, they met them and if they had something of merit, he would tell them [fol. 681] to send in something for us to test. The report contains those notations in there. Now, anything that was actually tested is in the report, in the weekly report.

The reports in front of me on the chair are reports from the various divisions of the engineering department, written weekly and sent upstairs into the engineering office, and the chief engineer would digest, he took those various reports and would make them into that report as you see it. These are the records we have been talking about. This is from 1916 to 1919, inclusive. Those are all of the records for those years; those are the reports every week. I have gone through every one of them.

The first record of anything with the name "Long piston" in this bunch of reports, is July, 1918. It refers to a test conducted in the laboratory. That would be the first one I would recognize as a Long piston, was in July, 1918. I don't know what that piston was, but it mentioned that it had ribs on it, on the inside of it. I would say it was the type A piston. I base that statement from the fact that the type B, with the rib on it from the wrist pin boss, was the first time that I knew the Long piston was in its present form. That is, the July piston was different from the Long piston as we knew it later on. I have examined this item of July, 1918, to which I refer. In making this test they spoke of where the rib was. Now, the Long piston with a strut in it did not have any rib in it, and in the report it talked about when they tested a Long piston where there

was an interference and the cap screw striking the rib. Now, in the Long piston of type B there is no rib that that wrist pin holding bolt could strike. The type A piston had it.

There is nothing else in that report of July, 1918, that enables me to say whether or not it was the type A or type B piston, than the things I have already named.

Can I use the little note that I made out of that report? I have some notes here in my pocket I haven't used, but I made some notes where the references came to Long pistons to enable me to give my testimony correctly. I looked over those reports yesterday. I did not look over them prior to that. I looked through them to be able to talk honestly. I was looking for the place in that report where I first installed a strut type Long piston, and it was the time that Mr. Long came to the plant in March of 1919, but I wanted [fol. 682] to get that date accurately, because it could have been January or it could have been February, but I wanted to be sure it was March. Now, I wouldn't say up to yesterday that it was actually March, but I knew it was in 1919, because it was in the spring of the year and it was hard going when I made that installation.

I looked through the reports from 1916 on. The purpose of looking through the reports from 1916 on was to get the starting point of the Long piston coming to the plant. I made notes from those records there.

Referring to my notes, the first notation on Long piston was July 20, 1918, saying no rib on the suction side; next October 5, 1918 it mentions the Long patent. It says one rib on the exhaust side. In other words, those two pistons are the same. It designated them with no rib on the suction side, which means a rib on the exhaust side; and with one rib on the exhaust side, which would really mean no rib on the suction side. That was October, 1918, in laboratory work.

The next reference to Long's piston was in January 1919, January 18, Mr. Murphy's car, the first mention of a Long piston being installed in an automobile, car engine. That refers to the installation I made.

The next reference I find is on March 8, 1919, in Mr. John Wilkinson's car, new car. The report says that that was a "one rib Long" piston. That would be type A. March 15, 1919, sales department demonstrator. It says here: "Removed Long patented piston .003" to .005" clearance,

and installed special Long pistons with .002" clearance, and three wrist pins." That was type B. After that I found references to the type B piston. On March 22, 1919 was the first mention made of Long piston with sides supported by ribs to wrist pin bosses.

Referring to Exhibit 42-A, B, and C, those are parts of the record which I have described as being the records of the Franklin Engineering department which I looked over yesterday.

Mr. Richey: Now, we offer for the inspection of the other side all of these records. We see no need of offering them all in evidence. They are original records of the Franklin Company, and of course they don't want to let them go.

The Master: Of course they want a little time to examine them.

Mr. Bruninga: I will go ahead with the cross examination of the witness. I don't know whether I want to see them or not.

[fol. 683] (Narrative continued) I did not make an inspection of those records at the Franklin plant within the last week or two; I inspected them over at the office of Richey & Watts. Mr. Edgerton and the gentleman in the library, Mr. Snyder, was there at the time. There was various ones coming in and out there all during that time. Mr. Castor was not there. Mr. Murphy was not there.

Mr. Richey: All right. You may cross examine.

Cross examination.

By Mr. Bruninga:

I believe I testified for Long in an interference proceeding in 1926, down in Bodell's office.

Q. You were asked this question at that time: "What year was it, then, that you first worked in the experimental room?" and you answered: "1917"?

A. Yes, but I didn't go into the experimental actually until January, 1918; that is, as a part of that division.

(Narrative continued) It is a fact that I worked in the experimental room in 1917. I was in and out of there all the time.

Q. You were also asked this question: "Then is it possible that both Mr. Marks and Mr. Stellman experimented on pistons prior to 1918?" and you answered: "Yes, sir"?

A. I suppose I testified that way.

(Narrative continued) I don't recall what I said in that thing; you would have to tell it to me. It is possible that Mr. Stellman might have experimented on pistons prior to 1918 without my knowing about it. For all I know, he might have been experimenting on Long pistons prior to 1918. I haven't found any records of 1916 on that, our record doesn't show anything in 1916, and it doesn't show anything until 1918.

I saw and went over those records at Richey & Watts' office yesterday. They are Franklin Company records. I did not bring them over; I don't know how they came over. I didn't search the records at the Franklin plant. What I am testifying now is what I found in those records before the Court which I found in Richey & Watts' office. I feel that that is the engineering record of all those weeks, week and week. I know they are. I know that is a complete record of the complete report of the engineering department. There might have been somebody take a sheet out, I didn't count; there is no numbers on them; but it is pretty complete. It is all connected up. It is possible that there [fol. 684] are other records at the Franklin plant. It is possible, but not probable, that there were other records in 1916 and '17 and '18 and '19 at the Franklin plant that I do not have in that file. I feel that the report is a complete weekly report. Now, if there is anything taken out of there, it wouldn't be connected the way it is. I went over them sheet after sheet yesterday. I didn't have anything to do with that report until yesterday, in Cleveland, and I went through it to be honest in my testimony; that is the idea.

I first met Mr. Long in 1919, and I was introduced to him by Mr. Stellman.

Q. In 1927 you testified as follows, in the Long interference: "Do you know Elmer C. Long?" answer: "Yes, sir." "Q. How long have you known him?" "A. About nine years. Q. That would bring it back to 1918, isn't that right? A. Yes."

A. Well, I said about nine years. Understand when I gave my testimony down there with Mr. Long, I gave it just

as honest as I knew I could give it, and I didn't have any records to go from other than memory.

Q. Now, when you said that is the type piston, and pointing to Exhibit 43, which Mr. Richey handed you, which you said you had installed in Mr. Murphy's car in January, 1919, you just merely glanced at that print, didn't you?

A. No; I looked at the print and see the design of it. I saw that it was a—it didn't have struts in it.

Q. And you also knew the number P-2912, didn't you?

A. No, no, I didn't pay any attention to the number; I was looking at the piston.

Q. But before that you said that that particular piston had a T-slot?

A. Yes.

(Narrative continued) By T-slot I mean they slotted that piston from there (indicating) and ran it into a slot going around here; that is what I would call a T-slot. In other words, I mean a slot just about like shown on Exhibit 3-O, except it is carried all the way through. It had a slot below the bottom ring land, and then another slot extending from the center down to the end of the skirt so as to make a T. That is the kind of piston I installed in Mr. Murphy's car in January. It had webs on the inside here, running from the top of the skirt, the top of the head down along the side of the skirt and opposite this T-slot. That is what I call the type A.

[fol. 685] Exhibit 43 shows the T-slot right here; here is a slot on the skirt, isn't it, that red mark "R." That is the way I construe that drawing.

Q. As a matter of fact, that slot on that Long piston which you installed in Mr. Murphy's car was like Fig. 2 of patent 1,395,441?

A. That is the slot there; that is the general type of the piston, slotted up and running into a horizontal slot.

(Narrative continued) I don't recall whether or not it had a slot like shown in Fig. 1. I recall this part of it, because we had done our slotting there ourselves; this was different; there wasn't much in the outside appearance of the piston over what we were using except for the T-slot. The T-slot is what struck my eye. That is the one that was later referred to as type A. At that time there

wasn't any type A and type B. Later on I feel that that was the type A, and the rib type of the wrist pin boss was type B.

The pistons installed in Mr. Wilkinson's car in March, 1919, were practically the same as those installed in Mr. Murphy's car in January, 1919. The piston that was brought over by Mr. Long and put in later on in that test that you said was in March, 1919, that is just about the piston as shown in Exhibit F; that is practically the piston; I don't say this was on it, but it is practically this piston, that it had the supporting bosses.

When I say "this was on it" I mean that seems as though it was later on; I wouldn't say it was or wasn't on there, but I know from the first time Mr. Long brought the piston, this piston, we were doing a lot of things to make that successful in production. I wouldn't say that relief was on there or wasn't on there. I wouldn't say that it was the practice to put reliefs on pistons; this piston here didn't have any relief on it (indicating Exhibit 3-O), or this piston didn't have any relief on it (indicating Exhibit B).

As to reliefs on pistons, you had to have some place to expand it for it to go into, and there was a hugging action going on, if you didn't grind it elliptical, you had to put a relief in there. In other words, you could avoid putting an actual relief by grinding it elliptical. That was done by grinding it elliptical with the short axis of the ellipse on the line of the wrist pin boss; that was done later on in our own plant. That was done before Mr. Long brought the pistons, Exhibit F, there. We had oval pistons in the factory. Now, that was—no, that was later on, there wasn't [fol. 686] any relief on pistons before—there wasn't any relief on pistons before 1919 to my knowledge, not even on pistons like Exhibit B. It was the practice to do that in cast iron pistons. I am speaking of the aluminum pistons. That was done a long time before in cast iron pistons, although we had hundreds of cast iron pistons that did not have the relief on them. I wouldn't say that we did that as early as 1915. I wouldn't answer that question. I know we made a model, in the 20's; it was actually an oval piston, with the short axis along the line of the wrist pin bosses.

(Adjournment taken to 1:30 P. M.)

(1:30 P. M., the hearing was resumed.)

Referring to that Long piston that we installed in Mr. Murphy's car in January, 1919, I don't know whether that was relieved in the region of the wrist pin bosses on the outside. I don't know anything about the relief on the pistons mentioned in the reports of July and October, 1918. I know about the pistons, but the relief part of it, I wouldn't pass a remark about it, whether it had it or didn't have it.

I said that it was my job to make a better car. I was under Stellman. Stellman appointed me to that job. Stellman was chief engineer. Mr. Murphy was chief engineer when I was appointed in January, 1918. Before, Mr. Stellman was assistant chief engineer, and I was directly under Mr. Stellman. I reported to Mr. Stellman.

This Exhibit B type of piston was used in the Franklin car engine in 1919, in January, in Mr. Murphy's car. No, I am wrong. This is the aluminum piston that was incorporated in our 9-A, 1916 automobile, the 9-A 1916 model (indicating Exhibit B). It was used for 1916, 1917, 1918 and part of 1919.

I said that the top of the skirt was the area of grief in all pistons. In fact, in all pistons the greatest amount of heat comes from the head, and carries right into that spot, and it is the most rigid part of it because it is directly under a solid head and the wrist pin bosses, naturally, there is just less chance of the piston yielding in that section, that is the point we have to give the greatest clearance. What you want there, you want a piston to grow as it gets warm to fill up the whole interior, to eliminate slap. You see there are two things in the piston to be successful, one of them it must be quiet, the other one it must not score. Now, you give it the greatest possible clearance you can so it won't score; in the other sense you give it the least amount [fol. 687] of clearance you possibly can so it won't slap. I think that slot in Exhibit 3-O should be carried down to the end, to allow the piston when it expands, takes up the heat, to expand and pick up so you don't have a high pressure area for wear; you should have a small pressure area for wear. In an ordinary trunk piston that has no slotting in it at all, if you put it in a cylinder it begins to expand from the top down, tries to cone out with the big diameter at the top and the small diameter at the bottom, so the important place to have the yield is really at the

top of the skirt, gradually tapering down. That is what I meant by the area of grief at the top.

I first saw Exhibit 43 piston today. If that was over in the office, I wouldn't say that I saw it yesterday. I tell you honestly I was tied up with that all day. I won't say I saw it yesterday, I saw it this morning.

A. Was that the one over in the office (addressing Mr. Richey)?

Mr. Richey: No.

Well, I saw a blueprint of that type of piston over in the office, that is down here—that is the first time I saw that.

Q. Do you know where that blueprint is?

Mr. Richey: We have it over in the office, yes.

Mr. Bruninga: What is it, the exact thing?

Mr. Richey: I was told it was the exact thing.

Mr. Bruninga: I would be glad to have it. One of my objections was that it was so faint at the top of the rectangle we couldn't tell what was written on there. I would like to have you send for it.

(Thereupon, Mr. Richey sends for said blueprint.)

(Narrative continued) I believe I said that the Long piston that we used later on came to be known as type B, and that is correct.

Q. And that is the one, Exhibit F?

Mr. Richey: I object to that. He didn't say it was like Exhibit F. He said it was like one in the patent.

Q. Was it or was it not like Exhibit F, that type B?

A. Well, it was a strut type piston.

(Narrative continued) I don't know as it was any different from that piston Exhibit F. As far as I can tell it [fol. 688] was the same thing. I said that was called a "special Long." They called them "special Long patented." They used to say "Long patent piston," and this was designated as a "special Long patent piston." I believe the one we installed in Mr. Murphy's car was later on known as type A. That had the T-slot on one side and the ribs going up the skirt on the other side. That rib interfered with a bolt that held the wrist pin solid to the connecting rod, the clamping bolt of the connecting rod that

held the wrist pin rigid. In other words, referring for instance to Exhibit 14, that piston had a rib going down from the head along the skirt, and interfered with the bolt on the connecting rod. That was one of the things that was the trouble with it. Now, they didn't all do that when they were installed, but evidently it was just close enough to that in making its cycle sometimes it would possibly wear, a lot of things—evidently clearance was so little that at the beginning they probably wouldn't strike but as the mileage was built up in some of the yielding portions, and it gave, it allowed it to come close enough to hit that. Sure, we filed them, got a cold chisel and cleared them out, gave them clearance. That worked all right, as long as they had clearance. The interference was a plain mechanical matter. There was nothing the matter with the piston otherwise, that would be just a matter of the details not looked into closely when they made the drawings so that the casting had greater clearance at that particular point. There was just one rib down there about at a plane at right angles to the wrist pin boss. That piston wasn't a good piston because it wasn't a quiet piston, and it set up. It wasn't as good as the one known as B. I know of no reason why it was better than A; evidently it had greater yielding possibilities, that is all the piston done. The B piston was the nearest thing to being a satisfactory piston we have used.

The type B piston was discontinued in 1928 because it didn't perform as satisfactory as a piston that was introduced by a competing company, known as the Invar Strut piston. The Invar Strut just beat the Long out on the pistons from the results obtained in the laboratory and in the car, gave a more all around satisfactory piston. The weight is slightly, possibly a little bit more than the Long, but it wasn't a factor. We thought more of an all around satisfactory piston than we did on any ounces, it would be a small number of ounces or fractions of ounces that would be the difference in the weight.

[fol. 689] In 1928 when that Strut type piston was adopted, the power of the engine was increased somewhat; they made a bigger motor. That motor was for the 1929 model, and tested in 1928. The service of a piston was comparable to everything else that was in that engine, more subject to grief on the road, bearings and everything, high power engine. It wasn't necessarily a higher speed engine.

We had some trouble in scoring of the Long pistons just about in the plane where the webs run into the skirt, on the thrust side of our engine, or on the exhaust side, as we called it, that is on the thrust side opposite to rotation; that is where the scoring, 99 out of 100 occurs in the pistons on the thrust side. In the Long piston it usually occurred back of the webs. I don't know what was taking place in the piston. That is something—it always did the maximum scoring, you could see the heaviest portion directly back or the other side of the strut, even when we made the webs as thin as shown, for instance in Exhibit F, it would still score. The scoring was always back of the strut. Exhibit F piston, right there, was approximately the Long piston that we used in 1928, only in another size, greater size.

I wouldn't say what was going on inside of the piston when it scores and don't score because here is the funny part of it; you can have the same piston in another motor and be out and do just as hard work and it won't score in the same relation on the cylinder; or, another matter, it may be number 5 will score and on another motor it will be 2.

What we started to use in 1928 was a piston like Plaintiffs' Exhibit 41; it had a little wider strut, practically the same thing, though. That didn't have any webs in it; there wasn't anything that could push out. The scoring in the Long piston was directly back of the webs. I wouldn't say that would cause the scoring, and I wouldn't limit myself that way.

Going back to Mr. Murphy's car, in which the Long pistons, type A, were put in in January, 1919, the cylinders were badly worn. It wasn't a fair testing of the piston. There was things on the engine or incorporated in those cylinders, possibly a valve guide or maybe the fins were embedded deeper in the iron, or something that evidently they wanted to carry that test on with those cylinders rather than take them off and put on new ones. That would be my assumption or reason the new cylinders weren't put on at the time the pistons were put on.

[fol. 690] I won't say anything about the tests in July and October, 1918, with the type A piston, other than what I read in those reports. I have no independent recollection other than what the report says of 1918.

I know we put Long pistons in Mr. Murphy's car because they came to me, as they always did whenever there was any work given to me, that would always be given by the head

in that department, you might say Mr. Stellman or Mr. Murphy or somebody would say "John, I want you to put these in so and so's car." There would always be a slip on there, like a working order, maybe it would be written in pencil, just as an ordinary note, and when I completed that job, when that job was done, I supervised the work and took the car out and tested it so that the car would be satisfactory for the officials to drive that, to take with them or to go home with or to use.

Mr. Wilkinson's car had that model A piston put in it on March 8, 1919. That car, I wouldn't say how it performed because as a rule Mr. Wilkinson, he was vice president and he was the big man in the plant, mechanically in the management, as far as the building of the car, and he was the kind of a man that he preferred to drive his own car and break them in; nine times out of ten if I had a job for Mr. Wilkinson, he would get in the seat and drive off, he wasn't a bit fussy, if it worked on four cylinders, as long as he could go as fast as he wanted to. He always wanted to go fast. He didn't care anything about an automobile that was nice and quiet and anything, he always wanted speed.

Mr. Richey: We now produce for examination of counsel the blue print he asked for, which the witness said he saw in our office. (Producing blueprint.)

(Narrative continued) Mr. Wilkinson made no complaint to me about the pistons in that car.

Referring to the sales department demonstrator which we fitted up with Long pistons in the middle of March, 1919, we took out of that car a set of those T-slot, type A, pistons. As to the pistons that Long said "I have pistons here that won't set up," they didn't set up; they were beautiful, when this trip was completed, about 900 or 1000 miles on them, this car was pulled down after I made the installation, and they were all in fine shape.

We didn't start to use Long pistons right after that; there was a lot of work done; that was the beginning of the test-
[fol. 691] ing of the Long piston of the strut type. In other words, there wasn't anything else in the picture then around that experimental department to any great extent except that Long piston, and that gradually worked into production, because it was the first honest, successful tests they ever ran on aluminum pistons on a motor that was good. That Long piston was the first piston that was quiet and would go out and do a real day's work.

Mr. Richey: Which Long piston were you referring to in the last answer?

The Witness: The type which had the struts, like Exhibit F.

(Narrative continued) We started to put those pistons in production after this test, in the fall or winter of 1919; they started machining them up and making molds; we were putting them in official cars, cars belonging to Syracuse people, in other words, we got them in as many car owners' hands as possible, to get the reaction from them the way they sounded and the way they performed; and that gradually led to production. Before that the Service Department took some of them—service, you know, never specifies as being adopted until production actualy adopts it; but they were sent out into service for reasons of getting as many as they could into the hands of the owners.

Those pistons went into the service department in the spring of 1919 only as an experiment.

I never had anything to do with Long dealers.

Q. You don't know whether the Long dealers were using them as early as 1918?

Mr. Richey: You mean to ask him about Franklin dealers?

Mr. Bruninga: I mean the Franklin dealers, yes.

A. Yes, we offered those anywheres I was sent. I wouldn't go to the dealer but we always had a number of dealers that we could rely on, in fact they would have in their service organization a Franklin trained mechanic, and I could send things to them. I used to send pistons, valves, spark plugs; if anything acted good in our tests and we wanted to get a reaction from the field I would send them out to the service department I knew would give me a good honest opinion. I sent them to Chicago, Pittsburgh, several [fol. 692] areas we could get some good testing done. I wouldn't say St. Louis, although we had a fairly decent dealer out there. The places we worked in was places where there was hills, because you could drive pistons in a flat country where they wouldn't show up like a hill climbing, long sustained hills would bring out, hill climbing with wide open throttle would bring up the heat and cause grief where fast driving on the level wouldn't do it.

(Narrative continued) I believe William Venner was part of the dealership in St. Louis; I think his job was serv-

ice manager. I saw him in Syracuse a year ago, probably, maybe a year ago this time. I don't believe he was doing anything.

I didn't know that Venner was using Long pistons in 1918 for replacement in Franklin cars.

I have gone through these reports thoroughly that are before me on the chair. The first mention I claim of Long pistons occurred in July of 1918 in the report, Exhibit 42-B, on the third page. That is the first report where the Long piston enters into the picture.

I came to Cleveland, I got here a quarter to eight yesterday morning, 7:45. I spent the day going over the reports. I discussed this matter yesterday with Mr. Edgerton, who is with Richey & Watts. I got my information and of course I had it in the background, all of this stuff I am telling you today, of meeting Mr. Long and making the installation, but to get the facts up to date I consulted those reports there. I went over this matter that I have been testifying about today with Mr. Edgerton.

I did not bring this blueprint, P-2912, with me. I saw it over in Richey & Watts' office. There is noted on it in red "MD28"—some number on there with an X or something back of 2-8. "MD80-X"; "MD28—is that an 8-280."

"280-X" does not mean a thing to me. On the upper right-hand view also appears some red marks, but I don't know what they are. I don't find them on the photostat. I guess this blueprint belongs to the Franklin Company. I don't know what that mark is below "D. R. Clark."

I notice on the blueprint "6AL58" and right above that symbol there are lines which seem to run up into a little part. I couldn't tell you whether there might be something noted above on the original. That also shows faint the same way on the photostat.

[fol. 693] Mr. Bruninga: I just want to identify these matters on the photostat, so that I can return this blueprint to Mr. Richey.

Mr. Richey: Well, we will offer it in evidence if you think it is important.

Mr. Bruninga: Yes, you can offer it in evidence; I would like to have you do so.

Mr. Richey: Well, I offer it in evidence as Plaintiff's Exhibit 46. I do it reluctantly because I am duplicating the record, but on account of the question that has been raised by defendants' counsel.

(Narrative continued) I did not search the records at the Franklin Company before I came here. I was called to come here.

I am not drawing any money from the Franklin Company at the present time. The last time I drew any money was just about election, I had a special assignment on an army job. You see we have Franklin motors in army service, that is cavalry, on armored cars, trucks, commanders' cars. I was with them on the original contract on the reorganization forces and they wanted me to go down there and give them a pep talk to get them interested to buy Franklin motors, but the army isn't buying motors.

I am still an employe of the Franklin Company.

I have no independent recollection of the experimenting that was done with the Long pistons in 1918, nothing but what is in the reports. My first contact with them is supervising work in January, 1918. I don't remember that I operated a car with Long pistons in it in October, 1918.

Q. In that Long interference you testified as follows: "Did you operate or drive a car for test purposes having Long pistons in the motor?

A. Yes, sir.

Q. In what month was that?

A. I would say the same month as I feel that Mr. Long and I first met, October, 1918.

Q. How do you fix the date of October, 1918, as being the first time you met Mr. Long?

A. I know from the model that we were working on, or series we were working on, and the length of time it was in production.

Q. Do you recall what the name of the series was?

A. Yes, series 9-B." You testified like that—counsel will tell you—in that case?

A. I probably testified. Yes, I said it was around the winter of 1919 and it could have been in October, it may have been in March, of 1919.

[fol. 694] (Narrative continued) When I testified there, I will say something maybe you won't like—It was in the winter of 1918 or 1919 when I said what is in there, but it was, you might say, just trying to recollect the events, but actually what I am testifying today is what I got out of them books when it was; it was in the winter time, the winter of 1918-19, that is, it carried over. You get what I mean?

Now, I said three months this way in that report, and I am saying about three months this way in this report, 1918-19. In that case I testified about, I didn't have a chance to look at records. Now that I have a chance to look at the records I go by the records absolutely, rather than my recollection.

They promised they would pay my expenses and give me something, give me my salary, for coming here. I am not working, I couldn't afford to do it otherwise.

Mr. Bruninga: That is all.

Redirect examination.

By Mr. Richey:

When I testified in the interference case I didn't use the records before I testified. Since that time I have consulted the records. I will tell you why, if you want me to say it right in here. I would like to tell you why, because I was always later on the Long piston installation than anybody else, and this saying it from just memory, I made up my mind I wasn't going to do it. The records have absolutely refreshed my recollection and memory.

Q. Now, in your testimony in the interference you said, we asked what year it was that you drove these Long pistons, and you said: "I would say the same month as I feel that Mr. Long and I first met, October, 1918"?

Mr. Bruninga: I don't think it is permissible for counsel to dispute his own witness, unless he quotes the same part I am quoting from.

Mr. Richey: I am not disputing, I am giving him a chance to keep you from confusing him, getting him balled up.

Mr. Bruninga: Oh, never mind, go ahead, Mr. Richey.

(Narrative continued) I say that in January, 1919, was my first contact with the Long piston by Mr. Long. Later on it was Mr. Long, but January of 1919 is my first knowledge of the Long piston, actually where I had something to do with it, but the reports showed in 1918, July, but I had no [fol. 695] work connected with that; the reports have given me that information.

Referring to Exhibit 43 piston, I will mark an X on the slot that I referred to as a T-slot. It was right there.

Q. Now, will you merit it on these other ones?

A. It would be over here.

Q. Do you see it there in the drawing, the T-slot you refer to?

A. Yes, I can see this one right in here.

Q. All right, mark it right on that, will you?

A. (Witness complies.)

Q. Now, do you see it on any of the other views?

A. I don't know as I do.

Q. Now, where is the rib B on this piston shown on Exhibit 43? Will you mark that with a Y?

A. This rib here, you mean?

Q. Yes, the one you referred to.

A. (Witness complies.)

Q. In the other figures where is that?

A. That would be this rib right here. It is not on there, though. That is the only place you can see it.

This Exhibit F piston is a lot like the Long pistons that I put into an engine in March 1919 because it is a sand cast piston, but I can't say whether or not the pistons of the original installation had this relief at the wrist pin bosses. When I said the Exhibit F piston and the Long pistons installed by me in March 1919 were alike, I didn't mean with respect to the relief. I told this gentleman over there (Defendants' Counsel) I wasn't sure the relief was on or off.

Recross-examination.

By Mr. Bruninga.

Referring to Exhibit 43, this view on the left, reading the sheet with 43 and the rectangle at the left down, this view at the left is a cross section taken right through the wrist pin boss.

Q. Now, what is this line over here which I will mark?

A That would be one of the slots, top slot.

Q. That line that I have my pencil right on now?

A. That I think would be a continuation of this one right here; in other words, that slot there would run into that portion of the head right there.

Q. Will you put a mark "N" at the part that you said was the top?

A. Yes.

Q. The top of the T, isn't that right?

A. Yes, that is right.

Q. Will you point to me what was the vertical of the T?

A. Right here, that runs into this one.

[fol. 696] Q. You mean that line that I have marked "M," is that right?

A. Yes; that would be the same slot carried down.

Q. And that slot ran from the bottom of the piston right into the slot "N," is that right?

A. Yes.

Q. How far around did the slot "N" go?

A. That went all the way around, I am pretty sure.

Q. All the way around the piston?

A. Yes; I wouldn't swear to that, though, either.

Q. I think you said the top part of that slot was more like the one——

A. I won't say that slot went all the way around.

Q. —shown in the Long piston?

A. Yes, like on that order.

Q. Like on Fig. 2 of the patent 1,394,441?

A. Yes, sir.

Q. And then on the opposite side from the slot there was this rib, there was this rib that you marked "Y" that runs in a dotted line from along the skirt and into the top of the head?

A. Yes.

Q. Is that right?

A. Yes.

Q. And there was just one rib in the center?

A. There was that one rib carried up here.

Q. And the vertical of the T——

A. Probably right from here right up to there.

Q. At the point that I will mark "M"?

A. Yes.

Q. And the slotted part of the T around the piston was at the part where you marked "X"?

A. Yes.

(Narrative continued) I never heard of the Long piston until 1919. The records tell me the piston was tested in 1918, in July, but I have no personal recollection of that 1918 test. I had nothing to do with these 1918 tests, not even with the record of those tests.

Mr. Bruninga: That is all.

Redirect examination.

By Mr. Richey:

Those two parallel lines marked "A" on Exhibit 43 look like a relief for the wrist pin bosses, but I don't notice any

relief and I can't see that there is any. I don't know what those two parallel lines running down there are.

Those two parallel lines which you have marked "B" indicates a slot in the piston?

Q. Will you compare the two parallel lines shown at B with the two parallel lines shown at A?

Mr. Bruninga: That is very clever leading, Mr. Richey, I must say.

[fol. 697] A. I can't.

(Narrative continued) I don't know what is shown by the parallel lines at A; I can't dope out that. The parallel lines marked C in the bottom view look like slots.

Q. Now, are those lines shown in the view above the one that I marked Fig. 5?

Mr. Bruninga: I will let you go ahead, because I think you will fall into your own trap.

The line C looks like a slot to me. Fig. 4 doesn't show it. This looks like the bottom of the piston to me, Fig. 5. What is this? This is supposed to be the bottom of the piston looking down?

Mr. McCoy: That is looking up from the bottom.

The Witness: Like looking down through here (indicating on physical exhibit)?

Q. Yes.

A. Well, it looks as though those were slots that appear in the end of the piston, these here."

I don't know how they designate these slots on the piston, I just took it for granted that was a slot and this was a slot. I said X was a slot, and that B is a slot. X, B and A look all the same to me; they look like slots; they look like saw marks on the piston. There is not anything on this drawing that leads me to believe there is a slot at M, but that is there; I guess that is the center line. The line I marked M in Fig. 1 and a mark in Fig. 3 is a center line. It doesn't look like a slot.

Q. Now, as a result of looking at the drawing closely will you state whether or not there was a slot at M in that piston?

Mr. Bruninga: I object to that, now, your Honor, I think this has gone just about far enough.

The Master: Yes, I sustain the objection.

When I say this is a center line at M, it looks like a line drawn down through the piston, that is all. By "center line" I mean, looking at the piston that way, a line cut right down through there, brought right down through that dimension.

Q. Would the center line show up in the piston itself?

Mr. Bruninga: I object again to it as leading.

That line M don't look like it is a physical part of the piston. The purpose of the center line is for setting up [fol. 698] their work, of making a drawing on that particular paper, as an aid to the drawing.

Recross-examination.

By Mr. Bruninga:

Having reference to the type A piston, and Fig. 2 of patent 1,395,441 and Figs. 1 and 2 of patent 1,489,499, if I recollect the piston, it looked like Fig. 2 of patent 1,395,441. I don't have any memory at all whether it looked like Figs. 1 and 2 of patent 1,489,499.

Mr. Bruninga: Those patents are in the record. That is all.

Mr. Richey: How about those records (H. H. Franklin Development Reports), do you want to look them over?

Mr. Bruninga: No, I don't want to look over those records, I haven't got time for that, and besides they are not direct from the Franklin plant at all; I don't know where they have been between the time they have reached your office.

Mr. Richey: I will have to put Mr. Edgerton on for a few questions before we go ahead with Mr. Gulick.

A. H. Edgerton, a witness called in rebuttal by Plaintiffs, being first duly sworn, testified as follows:

Direct examination.

By Mr. Richey:

I am of mature age and a member of the firm of Richey and Watts.

I went to the Franklin plant recently, and I saw there, first, the patent attorney, Mr. Bodell, received his permission to go into the Franklin plant, and there I met Mr.

Castor. Mr. Bodell accompanied me to the plant. I met Mr. Castor there and we went up into the engineering department of the H. H. Franklin plant, at Syracuse. Mr. Castor made a search for the records, the records which we have before us here in the court room. I was present throughout his entire search. The search lasted the greater part of the forenoon and during the time we had Mr. Chadwick, a former employe of the Franklin Company, come in, and he also searched, and these records were developed in that search. I mean the mechanical and experimental records which we have before us, of which Exhibits 42-A, B and C, and the remainder are on the chair there before the [fols. 699-913] Court. Those are a part of the records found by Mr. Castor. The remainder—they started, I think the first year was 1910; they ran up to 1932, inclusive. These are records from 1916 to 1919, both inclusive. Those are all the records they found for those years. After they were found, Mr. Castor sat down at the table and looked through them. I sat at his side and as he would finish them they were passed to me and I made a cursory review of them and then I brought them to Cleveland with me. I brought to Cleveland with me all the records Mr. Castor found for those years. These records that I have produced here, are all the records that I brought, including the three that have been separated therefrom which are marked A, B and C.

Mr. Richey: That is all.

Mr. Bruninga: No cross-examination.

Mr. Richey: It may be understood we can send those back that are not offered in evidence?

Mr. Bruninga: Yes, you can do whatever you want to.

---

* * * * * * *

[fols. 914-926] Thereupon the plaintiffs recalled as a witness in rebuttal ZAY JEFFRIES who, having been previously sworn, further testified as follows:

Direct examination.

By Mr. Richey:

Q. Doctor, you testified in this case before?

A. Yes.

* * * * * * *

[fol. 927] Q. I call your attention to Defendants' Exhibit 4-G, the article by Mr. Gunn on "Aluminum Piston Design." Did you know Mr. Gunn?

A. Yes.

[fol. 928] Q. Who was he?

A. He was chief automotive engineer for the Premier Company in Indianapolis when I first became acquainted with him. He later became associated with the Aluminum Castings Company or its successor company, and still later went to Packard Motor Car Company.

Q Do you know in any way how familiar he was with the aluminum piston problem back in 1920?

A. Yes, he was very familiar with the problem. He did work on the problem for the Aluminum Castings Company or its successors.

Q. And about when was that?

A. I think somewhere about the close of the world war and for some time thereafter.

Q. Now, will you look at his article and the pistons shown therein and state what the purposes of the various designs are and what the history of them is so far as you know?

A. This article deals particularly with aluminum piston design; it also treats more particularly of the aluminum piston design for passenger car engines, as indicated by the headline on the first page of the article, page 362. The pistons are designed, according to Gunn, with two principles in mind: first, it is designed with the object of conducting heat away from the head into the skirt and thence into the cylinder walls; and second, it is designed with the object of partly insulating the skirt from the heat of the piston head. He outlines the problem and considers some heavy duty engine pistons first. Those are described in drawings, Figs. 1, 2, and 3. These pistons have fairly heavy webs or ribs to conduct the heat away, especially Fig. 1. Fig. 2 has an excessively heavy head and ring land section to conduct the heat away. Fig. 3 is apparently a piston designed to have some kind of cooling medium put into holes extending from the bottom of the skirt up to near the head. Whether the medium would be mercury or sodium or what, I believe is not stated, but the idea is that something can be put in those holes to collect the heat from the head of the piston and carry it down to the skirt. Then he describes some other types of pistons. Figs. 4 and 5 are two other types. Fig. 5 was known, I think, as the hour-

glass type of piston. I don't see anything distinguishable over ordinary pistons in Fig. 4. Fig. 6 is the Ricardo type piston, which has already been referred to in this case. Fig. 7 is the Aluminum Castings Company double-walled skirt piston, which I referred to in the examination in prima [fols. 929-936] facie. Fig. 8 is apparently a piston of the Long type, with the six vertical slots and internal webs, being a double walled skirt structure. Fig. 9 is the Franquist type of piston. Fig. 10 is a composite piston; and Fig. 11 is a piston with heat-insulating material put into the head section, that is, the head section is made hollow, and some material like infusorial earth is supposed to be put in the head section and then a solid covering put over that, so that the heat cannot be conducted readily from the head into the remaining parts of the piston. I think this article describes the problems pretty well and represents the efforts made to solve the problem, without, however, getting very far in the direction of giving the public any real solution of the aluminum piston problem for pleasure car purposes.

Q. You spoke of the piston shown in Fig. 8 as being of the Long type. Is that the same as or different from the pistons Exhibits F and E?

A. Seems to be about the same with the exception of the rib in the head, and the drawing in the Gunn article shows no boss relief.

Q. What about the relation between the webs and the bosses?

A. Oh, yes, one of the bosses in the Gunn article is attached only to the skirt portion and not to the web portion, which is not the construction of the Exhibits E and F.

Q. Do you know why that change was made in Fig. 8 over the Long piston?

A. I suspect it may be drawn in there as a means to compensate for expansion across the bosses.

* * * * * * *

[fol. 937] Q. Will you next take up the patent to Long, 1,395,441, and compare the piston illustrated and described therein with the piston of the Jardine and Maynard patents in suit?

A. This Long piston in patent 1,395,441, is a single-walled piston with special slotting on each of the thrust faces of

the skirt or guide section of the piston. On one side is a T-slot, as shown in Fig. 2, and on the other side is a complicated slotting consisting of a U, or more accurately, a rectangular shape with one side of the rectangle missing, and a vertical slot extending from the bottom of the slot to approximately the line between the two bosses, as shown in Fig. 1. From the drawings it would appear that the slot is entirely in the guide section and therefore the horizontal slots do not separate the guide section from the head section. If that is a fact the slotting can do no good because the piston would seize in the guide section just above the horizontal slot where the piston would be the hottest. Furthermore, there is no relief around the boss section, and with no relief the piston could not conform to the cylinder wall at the top of the skirt, even by utilizing distortion, because the piston would exert pressure against the entire circumference. The Long piston, therefore, does not have the guide section separated from the head section by a horizontal slot, as in Jardine, nor is there relief around the bosses in combination with the slotting, as is found in Jardine. This piston, therefore, does not have the same construction as Jardine and it does not have the same mode of operation as Jardine, and it therefore cannot give the same results as Jardine. The analysis with respect to Jardine is also applicable to Maynard. The Long piston does not have the same construction as Maynard, nor the same mode of operation, nor can it give the same results.

Q. Will you answer the same question with respect to the Long piston shown and described in the Long patent, 1,489,-499?

A. This piston is a double-walled piston, as shown clearly in Fig. 5, which is a cross section through the bosses. It has a complicated set of slots, shown in Figs. 1, 2 and 3. The slotting on one of the thrust faces, as shown in Fig. 1, is rectangular, with one of the sides of the rectangle missing. It may be described also as one horizontal slot with two vertical slots extending one from each end of the horizontal slot to the bottom of the skirt. This is the side which is double-walled, as is shown in both Fig. 4 and Fig. 5. The other thrust face is slotted with one horizontal slot and two [fol. 938] vertical slots, which connect the ends of the horizontal slot but do not go down to the bottom of the piston skirt. This piston does show a horizontal separation between the guide section and the head section. This separa-

tion is clearly shown at numbers 11 in Figs. 1, 2 and 3. There is, however, no boss relief in combination with the slotting. The piston in my opinion would have a certain degree of wall or skirt flexibility in operation. As compared with Jardine the construction is different, as can be clearly seen. Jardine has in one of its constructions a double wall at the head of the piston but in neither of his constructions does it have a double-walled skirt section. In one of the Jardine constructions there is no double wall in any portion of the piston. So from the standpoint of a double-walled skirt section, the Jardine construction is different from that of Long. Jardine has a simple system of slotting, as opposed to Long's complicated system of slotting, and Jardine uses boss relief in combination with horizontal and vertical slotting, which is not found in Long. The mode of operation of Jardine is therefore different from the mode of operation of Long, and the result is also different.

The Long construction is not like the Maynard construction. In the first place Maynard shows nothing but a single-walled structure. The Long construction does not have the combination of flexible webs and horizontal and vertical slotting with relief, as shown in the Maynard patent. The mode of operation of Maynard therefore is different from the mode of operation of Long, and the result is also different.

Q. You are asked the same with respect to the Long patent 1,872,772?

A. This construction is a complicated one, having double-walled sections around each of the bosses of the skirt section. The piston, when completed, has two horizontal slots and six vertical slots, each of the six vertical slots connecting the horizontal slot with the bottom of the piston. The horizontal slot does also in this patent separate the head section from the guide section, as is shown by the numbers 12 in Figs. 1, 2 and 3. The drawings show no relief around the bosses, so that there appears to be no combination of horizontal and vertical slotting with boss relief in this patent. The construction is clearly different from that of Jardine, both in the double-walled nature of the skirt and in the system of slotting and the absence of boss relief. The mode of operation of the Long construc-
[fol. 939] tion is quite complicated but no doubt a certain

amount of flexibility is gained in the skirt section as a result of the web construction and the series of slots. The mode of operation, however, is different from that of Jardine and the result is also different. This is true also of Maynard. The construction is clearly different from that of Maynard and the mode of operation is different and the result is also different.

Q. Now, would you supplement your last answer by including the same comparison of Exhibits E and F with the Jardine and Maynard patents?

A. Exhibits E and F appear to be similar to each other, with the exception of the ribbing inside the piston head. This ribbing would appear to make little difference in the general construction, mode of operation or results of the Exhibits E and F, so I can, for the sake of brevity, compare piston Exhibit F with the Jardine and the Maynard constructions.

Exhibit F is a double structure with the six vertical slots and two horizontal slots, as described in the Long patent just previously discussed. The horizontal slots appear to separate the head section from the guide section. There is also relief around the bosses in Exhibit F which was not described in the Long patent itself. This relief around the bosses would, in my opinion, make the piston function better than without such relief and would bring the mode of operation of this Exhibit F nearer to that of Jardine. The mode of operation, however, would still be different because of the double-walled nature of the skirt and the complicated system of webs and slotting. The result, insofar as functioning, would somewhat simulate that of Jardine, but the piston would be much more expensive to manufacture and it would be heavier and would therefore not give the complete results of the Jardine construction. This particular piston head shows that the side opposite from the one bearing the exhibit tag, has collapsed in service. The gases have been blowing clear by the piston, as shown by the excessive carbon deposits at the bottom of the skirt under that boss. There has also been some collapse apparently in one of the thrust face sections, as shown by the carbon accumulation on it. There has also been fairly hard rubbing on one or the other thrust faces just opposite the end of one of the cross webs. So that, apparently, this particular piston did not function properly in service. As compared with the [fol. 940] Maynard construction, the same analysis holds.

The construction is different from Maynard and the mode of operation, even though the relief is present in Exhibit F around the bosses, is different from that of Maynard, and the result is different. One of the differences between Exhibit F and Maynard is in the nature of the bottom of the skirt. The bottom of the skirt in Exhibit F has six openings in it as compared with one in Maynard. It can be seen by examining Exhibit F that the carbon deposit is found in each one of the six vertical slots. So that the result obtained with Exhibit F is inferior to that obtained with Maynard.

Q. There is some testimony in this record to the effect that Long pistons were used by the Franklin Company commercially. State, if you know, who made the castings that were employed in the manufacture of these Franklin pistons?

A. I don't know who made all of the castings, but I know the Aluminum Company of America made castings for the Franklin Company over a considerable period of time.

Q. Do you know when that period began?

A. Well, I don't know, not from the standpoint of making a record of it, but I think it was some time along 1920 or thereabouts to about 1926.

Q. One of those pistons bears the name of Levett, Exhibit E?

A. Yes, Exhibit E does.

Q. And who was Levett?

A. Levett was a manufacturer of pistons and other aluminum castings.

Q. Is that the Levett that was referred to as formerly a licensee under the patents in suit?

A. Yes.

Q. This piston also bears the following notation: "Pat. 3-4-19." That is the date of the main process patents which you were asked about formerly in this case, isn't it?

A. Yes.

Q. Are you familiar with any of the activities of the Aluminum Company of America in its work in connection with this Franklin piston made after these Long designs?

A. I don't know that I understand quite what you mean.

Q. (Question read by reporter.)

A. Well, I am familiar with quite a number of things that happened.

Q. Just state in a general way what those activities were.

A. Well, the Aluminum Company didn't like to manufacture this piston, for one thing, because it is a difficult piston to manufacture in a permanent mold, but various other designs were submitted to Franklin and some time along about 1926 they adopted the Invar Strut piston, which became [fols. 941-952] standard at that time and is standard with Franklin at the present time.

* * * * * * *

[fol. 953] Q. Mr. Stellman produced a vector diagram, Defendants' Exhibit 4-A, and discussed the same in connection with the operation of the piston like Exhibit 1. Will you take that diagram and state whether or not you agree with Mr. Stellman, and if not, state your reasons?

A. Defendants' Exhibit 4-A is a drawing showing a cross section of Plaintiffs' Exhibit 1 type of piston, just below the horizontal separation between the head portion and the guide portion. As I understood Mr. Stellman's testimony, the effect of the various forces on the piston at point A, Defendants' Exhibit 4-A, would be such that this point would have no flexibility. In order to ascertain the facts, I had a piston similar to Plaintiffs' Exhibit 1 cut in two on the section represented in Defendants' Exhibit 4-A. When the piston is separated in two parts in that manner, it is clearly seen that the whole of the skirt section becomes very much more flexible in the detached state than it is when attached to the head of the piston. From rather rough measurements which I made with the help of some bathroom scales, it indicates that the flexibility of the bottom of the skirt of a piston like Exhibit 1 is only one fifteenth as great with the skirt attached to the head in the manner of attachment in Fig. 1 as when the skirt is detached from the head as shown in Exhibits 72-A and 72-B, particularly 72-B. In other words, it takes 15 times as much pressure applied on the bottom of the skirt to close the slot in Exhibit 1 as it does in the detached skirt Exhibit 72-B. This shows the tremendous effect of one part of a piston on other parts, especially in these flexible type pistons. In the head portion containing a small part of the skirt section, in Exhibit 72-A, the flexibility of the skirt portion can then be readily demonstrated by pressure of the two thumbs on the slotted portion. This shows beyond any question

that the skirt portion, even though it is attached to the head portion, has flexibility resulting from the combination of vertical and horizontal slotting. I found it possible in a piston which was supposed to be similar to Plaintiffs' Exhibit 1 to flex the webs at point A in Defendants' Exhibit 4-A merely by applying pressure on the bottom of the skirt with one hand. I have a micrometer on Plaintiffs' Exhibit 1 now across the two points corresponding to A. The diameter across the two points is 2.6085", approximately. If someone will turn the micrometer screw while I press on the bottom of the skirt. (This is done.) The reading at the present position appears to be 2.6085. [fol. 954] I will now press on the bottom of the skirt, merely with one hand. The reading on the micrometer as it was turned up while I was pressing is 2.595. That is a considerably greater deflection than I was able to effect on the other piston so I think it would be well for me to check it. I will make a new measurement across the point A without flexing. The measurement I obtain now is 2.6070. Now if some one will turn the micrometer wheel, while I—(This is done.) After I flexed the bottom of the skirt with one hand, the reading is 2.595". That is still considerably more flexibility than I was able to obtain on the other piston. I am afraid in screwing this up, you may have taken hold of the smooth part of the handle. (The one who assisted the witness): I did in both cases.

The Witness: Well, I only took the knurled part of the handle. The smooth part is attached rigidly to the micrometer, and the knurled part is attached movably to the micrometer; that is the difference. Now, the diameter in the unsprung state is 2.5985. So, if someone will turn the ratchet now, taking hold of the knurled part only (ratchet turned by Mr. Richey). Now the reading, after turning the micrometer up in the sprung position is 2.592. That is more in line with the amount that I was able to spring the other piston supposed to be similar to Plaintiffs' Exhibit 1.

There is another way of demonstrating the movement of the webs at the point A in Defendants' Exhibit 4-A. I just fastened the micrometer across the point A in Exhibit 4-A and screwed it tight enough so that its own pressure against the walls of the web would hold the weight of the micrometer by gravity. Then by taking hold of the bottom of the piston and springing it with one hand, the

micrometer dropped off of the piston. Both the measurements and the tests just described demonstrate clearly that in Exhibit 1 itself there is measurable flexibility of the webs at point A in Defendants' Exhibit 4-A.

In this connection I should like to mention also the horizontal slot in Plaintiffs' Exhibt 1 is not put in in quite the same way as the horizontal slot in the Maynard patent drawing. The horizontal slot in Plaintiffs' Exhibit 1 is put in by a groove tool so that the web is cut on the bias or at an angle. In the Maynard patent drawing the horizontal slot is cut more nearly straight through the webs. As shown in the Maynard Fig. 1, for example, the web [fols. 955-971] flexibility would probably be more than in Plaintiffs' Exhibit 1, varying, however, merely in degree. The turning in of the webs at their outer ends in Plaintiffs' Exhibit 1 makes them more flexible in the thrust direction than the webs shown in the Maynard patent. So the flexibility of the webs at the top of the skirt in the Maynard patent, in my opinion, would be very appreciable and certainly enough to function in a helpful way in the operation of the piston. The amount of flexibility found by micrometer measurement just now is considerable from the standpoint of piston clearance, which is measured in thousandths of an inch and some times in ten-thousandths of an inch.

Mr. Bruninga: I want to make the same reservation with reference to Exhibit 1 as to its flexibility, as already made to some of the questions. This matter was also discussed on the prima facie proof and most of this witness' answer is simply an accumulation or new argument to what he said before rather than a plain rebuttal of this Exhibit 4-A.

The Master: The same ruling on that. We will pass on that.

Mr. Richey: Pass on that when we come to it.

Q. Doctor, have pistons of the Maynard type without this relief shown at A been used commercially, and if so, in what quantity?

Mr. Bruninga: That, your Honor, was fully covered on prima facie. If you have some new angle on it——

The Master: Let him answer.

Mr. Richey: I can tell you what the difference is, if you want to know.

A. Yes, they have been used commercially and in large quantities, say in the hundreds of thousands.

• • • • • • •

[fols. 972-984] Q. You mean to say it was the general practice then in '15, '16 or '17 not to relieve pistons in the region of the wrist pin bosses?

A. No, I wouldn't say that, either.

Q. You don't know, do you?

A. Yes; sometimes they were relieved and sometimes they weren't.

Q. What happened if they were relieved?

A. They needed a little more clearance in fitting.

Q. As an alternative of clearance, relief was provided in the region of the wrist pin bosses?

A. Yes, if reliefs were present that made it possible to use a little less clearance.

• • • • • • •

[fol. 985] Q. You said that this article represented the efforts that were made to solve the problem, and that it did not do so, and did not give the public a solution. Now, this was January 19, 1920. Was Mr. Gunn familiar with what was being done at the Aluminum Company of America by Mr. Jardine?

A. I don't know whether he was or not.

Q. He was with the Packard Company at that time, wasn't he?

A. I think so.

Q. And there was rather close friendly connection between the engineers of Packard and the Aluminum Company of America and of the subsidiaries around there?

A. Just the usual relationship between the automotive engineers of the manufacturing companies and the automotive engineers of the parts companies.

Q. But he does mention the Long piston and the Franquist piston, and he says pistons of the Long and Franquist type are split to allow the piston to spring?

A. Yes.

Q. Now, did he make a mis-statement, or is that a correct statement? That occurs on the first page of the article.

A. He made a statement which is probably correct, qualitatively, at any rate, but his statement was not very accurate with respect to Franquist.

Q. You think it was accurate with respect to Long?

A. Oh, I think so.

Q. You were familiar with the Long piston at that time, weren't you, in January, 1920?

A. I don't know whether I was or not.

Q. Well, where did you get your information as to the Franklin Company asking the Aluminum Company of America or its subsidiaries to make these Long piston castings?

A. In the Aluminum Company.

Q. In the records?

A. Oh, no, just I saw the pistons being made.

[fol. 986] Q. By the Aluminum Company of America?

A. Yes. Then I have seen the castings lying around at the Aluminum Company plants.

(Short recess taken.)

Q. In what plant of the Aluminum Company did you see those Long pistons?

A. At the Harvard Avenue plant in Cleveland.

Q. What year?

A. Oh, I don't know what year; I think it was around 1920, though.

Q. You say that none of these pistons in this article gave the solution to the problem?

A. That is correct.

Q. You regard the Long piston, then, as not being any solution to any problem?

A. It is not a solution to the automotive piston problem, no.

Q. Well, do you know of any split piston that was in use before Long, in actual commercial use?

A. I don't know that I do.

Q. The Jardine piston never was in commercial use, was it?

A. I think not.

Q. You know it wasn't in commercial use. You don't know of any car that it has ever been used in?

A. No, I do not.

Q. You don't know of any car that the Gulick piston has ever been used in, do you?

A. No, not a piston like the Gulick drawings.

Q. Yes, that is what I am asking about. Do you know of any car that the Mooers patent piston was ever used in as shown in the drawings?

A. No, not as shown in the drawings.

Q. You don't know of any car that the Schmiedeknecht patent was used in?

A. No, not as shown in the drawing.

Q. And you don't know of any car that the Schmiedeknecht patent was used in?

A. No, not as shown in the drawing.

Q. Then of all of these patents in suit there is only the Maynard patent structure as shown in the drawing that was ever used commercially?

A. So far as I know.

Q. And that has not got the relief on the thrust face, has it?

Mr. Richey: Haven't we been over that enough?

Q. That is, relief in Exhibit 1.

A. It has not got the bending in of the webs like in Exhibit 1, at the ends, no; but it has relief around the bosses in combination with the horizontal slot and the vertical slot.

[fols. 987-993] Q. Yes. Doctor, you understand what I mean,—the relief on the thrust faces, which is the part between the sharp edge of the round part to where the web goes to the wrist pin boss.

A. Yes, I understand what you mean; but that is essentially a bending-in of the web at the end.

Q. The Maynard patent doesn't illustrate that, does it?

A. It doesn't illustrate that particular point, no.

Q. So when you said that the article represents effort made to solve the problem and that it did not give the public a solution, you counted in your statement the Long piston; is that right?

A. Yes.

Q. And you know, don't you, that the Franklin automobile was the worst kind of an automobile to try out an aluminum piston in?

A. Why, I know it was a pretty difficult car to put an aluminum piston in, yes.

Q. Well, it was an air-cooled engine, wasn't it?

A. Yes.

Q. And that is about the worst condition that you encounter in automobile practice where you want to use an aluminum piston?

A. I think that is true.

Q. And you know that that Long piston was used commercially in the Franklin automobile, don't you?

A. Yes.

Mr. Richey: Not the one that was shown in the Gunn article?

The Witness: No.

Q. But like Exhibits E and F?

A. Yes, those were used.

Q. And you make a distinction then, between the ones shown in the Gunn article and between the E and F?

A. Yes, there is a distinction in the construction and there is a distinction also in the finish of the piston.

Q. The finish of the piston, so far as relief in the region of the wrist pin bosses?

A. That is correct.

* * * * * * *

[fol. 994] Q. What is the first split piston you ever saw in commercial use? I will limit it to that.

A. Any kind of split?

Q. Yes, any kind of split.

A. The Franklin, with the bottom of the skirt split.

Q. Like Exhibit B?

A. Yes.

Q. And that was followed by the Long piston, wasn't it?

A. Yes.

[fol. 995] Q. And that was followed by the Kant Skore piston?

A. Oh, you mean that was followed in my experience by the Long piston?

Q. Yes.

A. Oh, I don't remember the second split skirt piston that I saw; but I think it was Jardine, was the second one.

Q. Like the Jardine patent in suit?

A. Yes.

Q. Taking up next the Long patent 1,359,441, you say as you read that patent, the skirt is the same diameter all the way up to the ring groove 2?

A. Yes.

Q. That is the way you understand it?

A. Yes.

Q. That is what you understand the word "adjacent" to mean?

A. Oh, it may mean a variety of things; it usually means near.

Q. It means "neighboring" doesn't it?

A. Yes.

Q. Now, when the statement is made on page 2 of the specification, lines 4 et seq., "In a piston of this improved character it is preferable to have the solid end 1 of the piston of a lesser diameter across the peripheral surface adjacent the piston ring recesses 2 than the remaining lower portions of said skirt."

A. Where do you see "said skirt"?

Q. Oh, the "lower portion of the piston." Thank you. What are the parts adjacent the lower ring groove 2,—only the upper part?

A. No, both parts are adjacent.

Q. And if anybody told you to have the solid end of the piston of lesser diameter across the peripheral surface adjacent the piston ring recesses than the remaining lower portion of the piston, you would stop right at the lowest ring groove?

A. Well, I think that is where the line should be drawn, particularly in view, in this case, of Long's other two patents, one of which appears to be about the same date of filing as this one, in which he actually shows the head relief extending up to the horizontal slot.

Q. There is no question about the disclosure in the Long patent 1,489,499 and 1,872,772, as to how far the reduced diameter goes down?

A. None at all.

Q. To the top of the slots?

A. That is correct. Such an important point in that patent 1,395,441 should be singled out and pointed out.

Q. If you had these two patents before you, filed on the same day, 1,395,441 and 1,489,499, you would absolutely close your eyes to the statement in the second patent in considering the first one?

A. No, I think I would open my eyes.

[fol. 996] Q. You would open your eyes and you would actually use the same feature in the first patent that you would in the second; isn't that right?

A. No, I don't believe I would. I think the two constructions are different. One is a double-walled structure; the other a single-walled structure.

Q. Whether double-walled or single?

Mr. Richey: Just a minute. Let him answer.

The Witness: I think that a point as important as that in patent 1,395,441 should be singled out as carefully as it is in the other patents.

Q. It should be repeated in every patent thereafter to the end of time; is that right?

A. This wasn't a patent thereafter; is was a patent application that was concurrent with the others.

Q. I notice that neither one of these Long patents 1,395,441 and 1,489,499 show that there are oil holes in the wrist pin bosses. Don't you think that is a vital defect and therefore that the whole thing would seize?

A. It is not an important point in what he thought was his invention.

Q. You don't think that is sufficient, then, to permit you to throw both of these Long patents out?

A. Not on that ground, no.

Q. Suppose the Long patent structure, the one in 1,395,441 was used with the skirt of uniform diameter and you started to run it in a cylinder, wear would take place, wouldn't it?

A. Yes.

Q. That would reduce the skirt in the region of the wrist pin bosses, just scuff it off?

A. Why not,—I think it would reduce the skirt mostly in the upper part rather than around the wrist pin bosses.

Q. You don't think there is any chance then of this diametrical expansion pushing out the wrist pin bosses you have been talking about with reference to all these patents, especially since there is a slot separation on both sides?

A. Oh, the wrist pin relief in combination with those other things would be helpful, but it depends on the clearance the piston is fitted in the cylinder, among other things.

Q. Well, whether you had relief or not, the skirt would expand in the region of the wrist pin bosses more than at right angles to it?

A. Yes, it would.

Q. And it would begin to wear down, wouldn't it?

A. It would bear against the cylinder there.

[fol. 997] Q. And in the end you would have relief opposite the wrist pin bosses?

A. Oh, I would hardly call that relief opposite the wrist pin bosses. You would also have some flexibility at the bottom of the skirt which would help push the boss region in in response to cylinder wall pressure in this piston.

Q. And the little narrow part above the slot 9a, Fig. 2, would wear off very rapidly, wouldn't it, if it wasn't of full skirt diameter?

A. It might, if the clearance was small.

Q. But the parts bounded by the slots 9 and 9a would flex in?

A. Yes, they would.

Q. Now, one of your objections to the Long patent 1,395,441 was that it has complicated slotting as shown in Fig. 1. That was one of your objections, wasn't it?

A. Yes.

Q. Reading the patent, do you think that one skilled in the art would inevitably come to the conclusion that you had to use that particular slotting of 1 with the particular slotting of Fig. 2?

A. Do you have reference to any particular part of the patent?

Q. No. But reading the whole patent, reading the patent and looking at the drawings, was it your idea in reading this patent that you had to use those two together?

A. Well, the patent appears to be quite specific in its description of the drawings.

Q. It is your idea then, is it, Doctor, as you read patents like the Long patent and others, that you should not deviate one bit from it; that you should be sure to put Fig. 1 on one side and Fig. 2 on the other side of the piston?

Mr. Richey: I object as indefinite, unless he says what other patents he means.

Mr. Bruninga: Well, strike out "other patents."

A. No, I think that the patent should be read not only with the idea of its construction, but the mode of operation and the results in mind.

Q. Just answer my question.

(Question read as amended.)

A. I think that is an answer, isn't it, to your question?

Q. Your idea then, is—I want to make it clear without a lot of explanation—that as you gather the patent, you [fols. 998-1001] wouldn't have to put Fig. 1 on one side and Fig. 2 on the other side; you as one skilled in the art would know that?

A. No, I think not from this patent, unless there is something in the description itself that guides one in that direction.

Q. What is the difference between the Long patent 1,395,441 and Exhibit CCC?

A. One difference is that in Exhibit CCC there is horizontal slotting on both sides of the piston, the horizontal slots separating the head section from the skirt section, whereas in the Long patent 1,395,441 the horizontal slots are in the upper part of the piston. The Exhibit CCC has only one vertical slot in one thrust face, and the other thrust face is left solid; that is another difference. Another difference is that the Exhibit CCC has generous relief around the bosses and extending to the top of the skirt, and the relief overlaps the horizontal slot on both sides of the piston. Exhibit CCC has combinations of elements, therefore, not found in Long. It also has a construction different from Long, and would have a different mode of operation and would give different results.

Q. But if the Long patent had added to it those features that you distinguish from it, there would be no difference?

A. Axiomatically, so, if one made the CCC piston and incorporated the changes necessary to make it, and called it "Long," what you say would be true.

Q. But those three distinctions that you just gave me are the only three distinctions you can think of?

A. Well, those are the essential differences, as I see it.

Q. And the first of them is due to the fact that since the lower ring land in Exhibit CCC is reduced in diameter to the same diameter as the ring land——

A. Yes.

Q. —that therefore there is a separation of head and skirt?

A. That is correct.

Q. The second one is that there is a relief in the region of the wrist pin bosses which is specifically described in the Long patent?

A. Yes, except that relief is quite special in the CCC piston; it extends clear to the top of the skirt and overlaps

the horizontal slots, which gives a combination of structural elements producing beneficial results.

Q. And the third one is that the slots 4-4 and 8, Fig. 1 of the Long patent have been left off of CCC?

A. Yes.

• • • • • • •

[fol. 1002-1005] Q. Now, you called particularly attention to the pistons Exhibit F and Exhibit E the Long pistons, and the collection of carbon deposit on those pistons, particularly in the slots. You have every reason to believe that those pistons were run in a Franklin air-cooled engine?

A. Yes.

Q. And that the cylinder of that engine becomes very hot, does it not?

A. Yes, it gets quite hot.

Q. Much hotter than a water-cooled engine?

A. Well, hotter than most of the pleasure car water-cooled engines, yes.

Q. You would rather expect more deposit of carbon in a piston in an air-cooled engine than in a water-cooled engine, wouldn't you?

A. In certain parts, yes; not necessarily on the head.

Q. Examine Exhibit 48 and tell me whether after the cutting of that slot there is not evidence of a springing of one part with respect to the other, especially at the top?

A. Yes, there is.

Q. That takes place when you split a cast iron piston?

A. Some times it does and some times it does not.

Q. That springing may be either in or out?

A. Yes, it may be either in or out.

Q. Depending on the strains that are set up during the casting; is that right?

A. That is correct.

• • • • • • •

[fol. 1006] Q. Now, let's continue with the Long patent 1,489,490. Look at Fig. 5. Is it your contention that there is no flexure of the web 8a during operation?

A. Well, the webs would flex, yes, in the boss axis, but there is no flexibility of the webs in the thrust axis, as I see it.

Q. As the metal part of part 4, Fig. 5, between 8a, and 8a expands, the webs must flex?

A. That is not a flexing of the webs, that is merely a change in position due to increase in temperature.

Q. Well, if there is no relief in the region of the wrist pin bosses, and with the skirt in the region of the wrist pin bosses bearing against the cylinder, and with these bosses again supported from the top of the skirt, don't those webs 8a actually have to flex as the expansion of 4 takes place with increase in temperature?

A. Oh, no, they couldn't flex as the result of any change in the part 4. They would be flexible in the other direction, to an extent, that is, across the boss axis.

Q. They would flex along the boss axis, wouldn't they?

A. Yes, they should, and the lower on the piston the greater the flexing, and by the time you reach the top of the skirt that would be very small.

Q. Would about the same flexing take place in the part 11, Fig. 4 of the Gulick patent, between the webs 17 and 18?

A. Oh, no. The flexing in those Gulick webs would be very substantial.

Q. Because designed for flexing?

A. Yes, and because of the complete horizontal separation and the vertical separation between the two webs. That construction is all in the direction of making the Gulick structure flex.

Q. You keep in mind, of course, that the part 4 is separated both vertically and horizontally from the rest of the piston in the Long patent 1,489,499?

A. Yes.

Q. You don't think that is comparable at all with the parts 11, 17 and 18 of the Gulick patent, Fig. 4?

A. No. No, I think if you took out the two slots, 5, and put in one right in the region of the figure 4, then those webs [fol. 1007] would operate more like the Gulick webs, but as they are I don't see how they can.

Q. That is, if you took out the slots 5 in the Long patent, then flexing would take place?

A. Oh, by putting in the slots in the right place.

Q. Now, your objection to this patent, at least one of the objections is that it is a double-walled structure. By that you mean it cannot be conveniently cast in a permanent mold?

A. That is one of the objections to the double-walled structure, yes.

Q. You don't see any difficulty in making cores for that piston, do you, permanent mold cores?

A. Yes, there would be difficulty.

Q. But it could be done, couldn't it?

A. Possibly.

Q. As a matter of fact it is a simpler proposition than Exhibit E, assuming of course the slots will be cut later on in both cases?

A. Yes, I should think it could be made as easily as Exhibit E.

Q. And Exhibit E is no doubt a permanent mold cast piston?

A. Yes, it was cast in a permanent mold.

Q. Now, turning to the Long patent 1,872,772, one of your objections to this patent was it was too complicated. Is it more complicated than the Gulick patent structure?

A. It is perhaps not more complicated in its structure, but it is more complicated in its operation.

Q. The fact is that it can be cast in a permanent mold?

A. Yes, with difficulty.

Q. While Gulick's could not?

A. That is my opinion, yes. The Gulick drawings, as shown in the Gulick patent, could not be cast in a permanent mold.

Q. Why do you say, "With difficulty," Doctor? How much experience have you had in casting pistons like Exhibit E?

A. Well, I haven't had very much personal experience in casting pistons like Exhibit E, but I have had a lot of personal experience in casting pistons in permanent molds. I know this is regarded as a difficult permanent mold job.

Q. But Mr. Long was selling those pistons in competition with Cleveland Trust Company's licensees, wasn't he?

A. I don't know whether he was or not.

Q. Well, you know that Mr. Long was sued for infringement of the Cleveland Trust Company pistons because he was manufacturing pistons of that kind, don't you?

A. No, I didn't know that.

Q. It has been said here by Mr. McCoy that the suit was dismissed after Long agreed to be good and buy his cast-

[fol. 1008] ings from licensees. I believe you heard that, didn't you?

A. I don't recall. I didn't pay any attention to it if I did hear it.

Q. Do you know anything about that?

A. No.

Q. If I am not mistaken the reference was at that time had to Exhibit FFF. That is really a fine piece of work, isn't it, so far as permanent mold casting is concerned?

A. Yes, that is a very fine piece of casting.

Q. Well, suppose it is complicated and suppose it is difficult to cast, what does that mean—increase in cost?

A. Yes, very substantially.

Q. What do you call "substantial"?

A. Well, I mean that a piston like that would be too expensive to use in motor cars generally.

Q. It wasn't found too expensive to use, was it?

A. Apparently wasn't for a time in the Franklin Motor Car, but that is a high priced car and was at the time that these pistons were being used in it.

Q. But still Franklin continued to use those pistons until 1926?

A. Yes.

Q. And as early as 1922 the Maynard type piston was on the market, wasn't it?

A. Yes.

Q. And to your knowledge not a single Maynard type piston has been used in the Franklin car, has it?

A. Not without the other modifications, at least.

Q. What other modifications?

A. Well, with the Invar Struts.

Q. Oh, you call that Invar Strut piston a Maynard type piston?

A. No, I don't call it a Maynard type piston, but it may have some Maynard features in it.

Q. Then your objection to a double-walled structure is the complication of casting, isn't that right, that is what it comes down to?

A. Oh, that is one, and extra weight is another. It is not so economical or commercial as the single-walled structure.

Q. And all of those objections also go to the Gulick piston as illustrated in the drawings?

A. Yes, that is true, but there are other features of complications in the Long piston and in its structure and its

mode of operation which do not apply to the Gulick construction.

Q. In spite of that fact Long has been on the market and Gulick has not?

A. The Long type of piston has been on the market and the Gulick type piston, as shown in the Gulick drawings, has not been on the market.

Q. And one of your objections to the Long patent is, again, that it does not describe relief in the region of the [fol. 1009] wrist pin bosses?

A. That is correct, it does not describe such relief in combination with other features, such as horizontal and vertical slots, to gain skirt flexibility.

Q. But it does clearly disclose, without any question, the reduction in diameter of the piston to the top of the horizontal slot?

A. Yes, it does.

Q. I believe I understood you to say if that feature was used relief in the region of the wrist pin bosses was not so necessary?

A. No, it would not be so necessary as it would be in the other Long construction which we were discussing; it would still be helpful, however.

Q. Now, you took up Exhibits E and F, and then selected the sand cast piston, and you made a number of observations as to improper operation, carbon collecting on it, and all of that. You knew of course that Exhibit F is a sand cast piston, don't you?

A. It is a sand cast interior, at any rate; and I don't know that it is a sand cast exterior, however.

Q. You don't find those objectionable features as to the blow-bys and collection of carbon, and scoring and so forth, on Exhibit E, the die casting, do you?

A. Not to the same extent, the wearing surface is in pretty good shape in Exhibit E.

Q. You don't find the side at the bottom of Exhibit E has collapsed in?

A. No.

Q. You don't find hard rubbing opposite the webs, do you?

A. No.

Q. What do you think caused that in Exhibit F, the sand cast piston?

A. Well, it is a combination of clearance and temperature, has been such that the wall pressure has been high

during operation in Exhibit F, and there is no evidence of very high wall pressure in Exhibit E. I have seen many trunk type pistons with no slots at all that have the same kind of surface as Exhibit E. Among other things, it is a matter of how much clearance the piston is given and the effectiveness of the lubrication.

Q. As a matter of fact, the hard rubbing opposite the webs was caused by the fact, really, that the webs expanded out and pushed that cylindrical part against the cylinder, isn't that right?

A. Yes. But in order to do that the webs had to become quite hot, or the clearance of the piston had to be relatively small.

Q. What do you say, do you think the webs weren't flexible enough? You have the piston before you, so you ought to [fol. 1010] be able to tell something about it?

A. No, there is flexibility in the webs.

Q. But still there is this rubbing, apparently due to expansion of the webs outwardly?

A. Yes, but as I have mentioned before, that is a matter of the design of the piston and also the clearance with which it is fitted. One can fit the Maynard piston so that it seizes this way or rubs this way. No piston construction is in itself a cure-all against piston troubles. The piston has to be fitted in a certain way. My thought in this was that it was perhaps fitted or intended to be fitted so it would not slap, but it apparently was not fitted loose enough for that particular piston under the conditions of operation.

Q. You made the outright statement that the piston didn't function properly in service. Did you have that piston F in mind or the Long pistons generally?

A. No, I had the piston F in mind particularly, and I think I was describing the collapsing of one of the side walls of this piston and the scoring on the thrust faces.

Q. You didn't have the Long pistons generally in mind, did you?

A. I don't think I had them generally in mind with that statement, but generally speaking, the Long pistons were not satisfactory.

Q. What do you base that on?

A. I base that on my general piston experience and with the information that I have got from time to time with respect to pistons in operation in the United States.

Q. From whom did you get the information with reference to the Long pistons in the Franklin engines?

A. I got it from the automotive engineers of the Aluminum Company.

Q. Oh, the automotive engineers of the Aluminum Company?

A. Yes.

Q. Of course they were boosting the Long pistons, were they not?

A. Oh, they weren't; but they were continually in touch with the Franklin Company and would come back with repeated tales of how they weren't satisfied with their pistons.

Q. And I suppose the Aluminum Company offered the Franklin Company a better piston than the Long pistons?

A. Yes, they eventually did.

Q. In 1926?

A. Yes, it was earlier than that that they offered them a better piston.

Q. Why didn't the Franklin Company take a better piston earlier than that?

[fols. 1011-1025] A. Oh, they had quite a period of testing. I don't know just why they didn't make the change earlier.

Q. Was the Gulick piston offered to them just exactly as shown in the drawings?

A. No.

Q. Wasn't the Jardine piston shown to them just as shown in that drawing?

A. No.

Q. As a matter of fact it was shown to them just as shown in that drawing, wasn't it?

A. Not that I know of.

Q. And don't you know the Franklin Company would not have the Jardine piston?

A. No, I didn't.

Q. Do you know whether the Maynard patent piston was offered to the Franklin Company?

A. No, I don't know whether it was or not.

Q. And then finally in 1926 the Franklin Company turned over to the strut piston?

A. That is correct. In so far as I know, they haven't complained since.

Q. Did you say that the Aluminum Company of America made castings for the Franklin Company from 1920 to 1926 for those Long pistons?

A. Well, I don't know the exact date, but they made castings for the Franklin Company from about 1920, as I recall it, to about 1926.

Q. And that Long piston was a more expensive piston than either the Jardine or the Maynard piston?

A. Yes. They paid, I know, considerably more for their castings than they would have for the others.

Q. And in addition paid Mr. Long a substantial royalty?

A. So I understand.

Q. And you can't explain that at all, can you, why the Franklin Company should pay a higher price for the Long pistons and pay Mr. Long a royalty, when the Jardine and the Maynard pistons were available to the Franklin Company for a period of from five to six years?

A. No, I really can't explain it.

Q. You cannot offer any explanation at all?

A. No. Nor can I offer the explanation why they slotted the bottoms of the skirt of the old Franklin type piston.

Q. But you do gather from all of that that the Long piston was no good, while the Jardine and Maynard patent pistons were far superior?

A. The Maynard piston is far superior for general purposes; there is not any question about that. So far as the application in the Franklin car is concerned, I can't say. I do know from my own experience that Franklin was complaining about piston trouble from 1916 until about 1926.

* * * * * * *

[fol. 1026] Q. Now, Doctor, the flexibility of any web is dependent upon two things, one of them is the length of that web and the other is its thickness, is that right?

A. Yes, and the lever arm.

Q. Well, the lever arm is determined by the length, for instance, from the wrist pin boss to its attachment to the slipper, that is the lever arm, isn't it?

A. Well, I understood you mean the length along the vertical axis of the piston.

Q. In other words, the lever arm in Fig. 8 of the Jardine patent is made where 25 joins the boss to where it connects with the slipper, isn't that right?

A. At that cross section, yes.

Q. Now, the longer the lever arm the more flexible, isn't that right?

A. Yes.

Q. And the shorter the stiffer?

A. That is correct, other things being the same.

Q. The bigger the cross section the greater the stiffness?

A. Other things being the same, that is true.

Q. And you want this Court to understand, then, that taking Exhibit 1 and Exhibit 74, and the thicknesses of the so-called webs of Exhibit 1 as shown, and the thickness of the web as shown on 73, and comparing the lengths of the two webs from the point where they connect with the cylindrical part of the piston and where they connect with the piston head or the boss, you want this Court to understand that it is your opinion that in Exhibit 1 that little short part would be flexible and in Exhibit 73 the longer arm would not be flexible, even though the slipper was split?

A. I don't say it would not be flexible. I said it would be too stiff to function properly.

Q. Too stiff to function properly, but Exhibit 1, with a much shorter arm, does function properly?

A. Yes. There are things in combination in Exhibit 1 which are not found in the Ricardo type piston, even though you should split the skirt of the Ricardo type piston, and one of the things in the Ricardo type piston is that those cross webs do expand out and press the skirt hard against the cylinder wall.

Q. That is not true of the Jardine structure?

A. It would be true of the Jardine construction if the webs [fols. 1027-1035] were not made flexible and if the skirt were not made flexible, and if the slippers were not vertically slotted,—all of those things combine to make it possible to fit the Jardine piston closer than the Ricardo piston.

Q. All right, let's split Exhibit 73, and the difference between 73 and Jardine, then, is that the webs of Jardine are more flexible than in 73?

A. That is correct.

Q. But still you wouldn't say for one minute that the short webs of Exhibit 1 would be as flexible as the webs of 73, if the slipper were split?

A. Perhaps the ends of the webs themselves are not quite as flexible in Exhibit 1, but in combination with all these other things, Exhibit 1 functions in the motor. There is another feature of this Exhibit 73 and that is that the skirt section at the top of the skirt, that is the main thrust slipper, is wider than the skirt section of Exhibit 1, although the piston itself is very materially smaller than Exhibit 1; that is,

the Exhibit 73 is very materially less in diameter, yet the skirt width at the top on the thrust face is considerably greater than the skirt width at the top of the thrust face on Exhibit 1. That makes it unnecessary for Exhibit 1 to flex as much as the Ricardo type piston in order to function in the motor.

• • • • • • •

[fol. 1036] Q. But you still want the Court to understand that the very small part from the head where the web connects with the head to where it goes into the cylindrical part of the skirt, that is, this corner, that will actually flex in operation, this short little arm?

A. You seem to be very much disturbed about the flexing of some particular little spot in the piston. Now I have said that this web is flexible. It is flexible because it is made of a flexible metal; it is flexible because the web is made thin; it is flexible because of the horizontal slot; it is flexible because of all those relationships; and I have demonstrated that it does flex in response to a force which I can apply with one of my hands on the piston, and the answer that I [fol. 1037] make is that that portion of Exhibit 1 is flexible enough to function satisfactorily in the motor in combination with the other elements in that piston.

Q. You understand by "that portion" you mean this little part at the top of the slot just about ⅛" long?

A. No, I am not pinning it down to any little part, Mr. Bruninga. I don't see how one can pick out any one little part of this piston and make very much of a calculation about it by itself. Taken in connection with all the other elements of the piston, I have demonstrated, both to my satisfaction, and I hope to the satisfaction of others, that that construction has flexibility at the top of the skirt.

Q. But can't you answer my question when I ask you, do you want the Court to understand that in the operation of the piston the part about ⅛" of an inch long flexes?

A. Yes, I think it does. I think I have said that a good many times. I think I have got very good grounds for saying it, although I don't know that that itself makes a whole lot of difference, because Maynard doesn't necessarily say that that particular part has got to flex; he gives a construction which operates in a motor and the construction is similar to that construction of Exhibit 1.

Q. I agree with you that Maynard in his patent nowhere states that that part is flexible. But I have reference to the Gulick patent, in which flexibility of web is relied upon, and that is what I had in mind when I asked you that question.

A. You mean that the web does not extend into the curved portion in Exhibit 1?

Q. That is what you consider, that it extends into the curved portion?

A. Certainly.

Q. Doesn't it extend clean out to the slot, then?

A. It may, if one wants to consider it that way; but this particular part is cast in in Exhibit 1.

Q. I understand it then, in Gulick you must consider the web as running from the wrist pin boss clean to the slot 21; is that right?

A. No, I wouldn't consider it that way in Gulick.

Q. As a matter of fact in Gulick, when you talk about a web, you are talking about 18 and 17, the connection between the wrist pin boss and the skirt; isn't that right?

A. That is correct.

Q. And that is what I was trying to have you apply to Exhibit 1, that same web. Where do you find it in Exhibits 1, 17 and 18?

A. I haven't found in Exhibit 1 that this curve on the [fols. 1038-1048] end is carried to the inside of the piston in the casting; it is even put in the cores; and certainly I should say that that is intended to be considered as the total web; that is, up to the point where the cast-in portion joins the skirt. But I didn't even take advantage of that curve, which makes for more flexibility in my measurements. I put my measuring surfaces right where Mr. Stellman said that the piston was too stiff.

Q. Let's get down now to cases. We are all agreed, I believe, particularly yourself, that where flexibility is necessary is at the top of the skirt?

A. That is where it is most necessary, yes.

Q. You don't care much about the bottom of the skirt?

A. I don't care very much about it in general, no, because that can be gotten easy by itself, but to get flexibility of the bottom of the skirt in combination with the flexibility at the top of the skirt is no small problem.

* * * * * * *

[fol. 1049] Q. You have been asked during your cross examination a lot about the alleged relief at the ends of the webs in Plaintiffs' Exhibit 1. Will you state whether or not that is a relief or an extension of the web, and give your reasons for your answer?

A. I would consider the portion of the skirt in Plaintiffs' Exhibit 1 near and at the top of the piston on which evidence of grinding is present, to be the skirt portion proper, and the remainder of the top portion of the piston below the head section, to consist of webs. These portions are cast into the piston and have counterparts of the depression on the outside of the piston wall in projections in the inside of the piston wall. It appears to me that the webs may be considered as the parts extending up to the portion of the outer wall of the piston which has been machined.

Q. How long has the Aluminum Company of America marketed pistons like that Plaintiffs' Exhibit 1?

A. With the bent-in webs, do you mean?

Q. Yes.

A. I couldn't say exactly, but I should say with that construction or its equivalent since, say, 1923 or 1924.

Q. Do you know whether or not that same kind of piston has been marketed and sold by any other licensees of the Cleveland Trust Company?

A. Yes.

Q. Which others?

A. The Bohn Aluminum & Brass Company.

Q. Any others to your knowledge?

A. Also the Aluminum Industries, which I understand is a licensee of the Aluminum Company of America.

Q. Now, will you state whether or not any or all of these licensees were making that kind of piston before the Sterling Products Corporation began the manufacture of it, if you know?

* * * * * * *

[fols. 1050-1055] A. The Bohn Aluminum & Brass Corporation was, to the best of my knowledge. I don't recall of seeing the particular pistons manufactured by Aluminum Industries of this particular type.

Q. What about the Aluminum Company of America?

A. Oh, the Aluminum Company of America was, to the best of my knowledge.

* * * * * * *

[fol. 1056] Q. We are just asking for your information and not deductions you might draw from what people tell you or what you see. Now you said that the flexibility varied directly as the length, in other words, if the length [fols. 1057-1059] of a part is increased to double the length, it would be double the flexibility?

A. That depends on what you mean by the length. If it is the length of the web, then you halve the flexibility, other things being the same. If it is the length of the lever arm, then the flexibility is doubled.

Q. And that varies universally as the cube of the thickness, is that your understanding of the theory of mechanics?

A. Yes.

Q. That only applies, however, to a simple beam fastened to one end; isn't that right?

A. Oh, that applies to beam structures generally that are solid.

Q. That doesn't apply to a complex structure like the web in Exhibit 1, does it?

A. Oh, not exactly; that is very complicated, of course.

Q. Now, you said you have seen pistons like Exhibit 1 without that relief that we have been talking about, that is, the relief in the cylindrical part going from the web to the skirt proper. Did you see those pistons after they had run for a while?

A. Yes, I have.

Q. And you found out they wore down on these corners?

A. That was the point of hardest bearing, yes.

Q. And after a while they wore down considerably?

A. Yes, they could wear quite a bit. Of course any piston wears as it is used in the motor.

Q. But that was the point of greatest wear, the zone of greatest wear?

A. Yes.

Q. And there was considerable pressure applied there, wasn't there, to cause that scuffing off or wear, we might say?

A. Well, the piston will wear whether it has any pressure other than the thrust pressures. I don't know of any way to keep a piston from wearing in service.

Q. Yes; but that wear that takes place in those regions we are talking about, that was due to considerable pressure applied in those regions?

A. Oh, I don't know as you could say "considerable pressure." It shows that the piston was bearing first and eventually hardest at those points.

* * * * * * *

[fol. 1060] DEFENDANTS' SURREBUTTAL TESTIMONY

Thereupon, the defendants called as a witness in surrebuttal, GEORGE P. DORRIS, who, being first duly sworn, testified as follows:

Direct examination.

By Mr. Bruninga:

Q. What is your name and age?
A. George P. Dorris.
Q. Where do you live?
A. St. Louis, Mo.
Q. What has been your general education, just give it very briefly?
A. High school and general school in Nashville, Tennessee, one year in Vanderbilt University, and from there on up through the gasoline engine business, up to this time.
Q. What has been your experience, very briefly, in gasoline engines in automobiles?
A. I built my second engine between 1890 and '92. That was a motor boat proposition, and that was operated for four or five years, and driven around Nashvilie and from Nashville to Bowling Green, Kentucky, where it was sold. During that time I had the agency for the Foos Gas Engine Company of Springfield, Ohio, and sold a number of engines in southern Tennessee and northern Alabama to operate cotton gins. I did quite a little contracting work in keeping those engines running, and other engines. I kept in close touch with what was going on in the gasoline engine business and in 1893 John L. French and myself spent two weeks in Machinery Hall at the Chicago Worlds Fair, where we paid particular attention to all the gas engines on exhibition there, which were principally of foreign makes, English, German, French and Swiss. In 1895 there was a road race or motor race of motor cars, or horseless carriages held in Chicago and I began to build a horseless carriage at that

time, which I had operating in the summer of 1897. That was run around Nashville up to previous to Thanksgiving of 1898, when it was shipped to St. Louis where the St. Louis Motor Carriage Company was organized, of which I was vice president and chief engineer. They began building motor cars at that time, and from 1900 up, we had been fairly successful in the motor car business. In 1903 the partner there, John French, died from an automobile acci- [fols. 1061-1068] dent in Pittsburgh, and in 1905 that company was moved to Peoria, Illinois. I resigned at the time and formed a new company at St. Louis known as the Dorris Motor Car Company, and was vice president and president and engineer of that up to 1927, January. I spent two years with the Sterling Products Corporation as sales engineer from January, 1928, until about January, 1930.

* * * * * * *

[fol. 1069] Q. On prima facie and again on rebuttal the question of this relief of Exhibit No. 1, adjacent the thrust faces, was brought out. Have you anything to say about that, based again on experience and not on theory?

Mr. Richey: Same objection.
The Master: Same ruling.

A. Why, this particular design developed localized high pressure spots at these upper corners of the cross head shoe, the one with the split, to such an extent that if that was driven above 50 miles per hour or continuously, those would be scuffed down. If they were relieved, which they were automatically, which was done by wear, the space would be increased. In fact, the drag on that piston was such at 65 miles per hour to limit its speed, and on replacing pistons with less expansion or tension against the [fols. 1070-1073] cylinder walls the speed was put up to 75 miles per hour, with change of pistons alone.

Q. You mean with that same piston?
A. Well, with other design pistons.

* * * * * * *

[fols. 1074-1076] Cross-examination.

By Mr. Richey:

Q. Before they finally adopted this piston like Exhibit 1 they tried to market several other different kinds of aluminum pistons, didn't they?

A. Yes.

Q. One of those pistons had an iron strut in the head, didn't it?

Mr. Bruninga: Same objection.

The Master: Same ruling; he may answer.

A. Yes.

Q. You tested that piston out, did you?

A. Yes.

Q. And you finally gave it up, didn't you?

A. No.

Q. You haven't made or sold any of them like it, have you?

A. Not for the present that I know of.

Q. Not since you adopted the one like Exhibit 1?

A. I can't say. They may have sold some, I don't know.

Q. You recommended that piston to Ford, didn't you?

A. Yes.

Q. And they tried it out and gave it up?

Mr. Bruninga: I want to make an objection. It is entirely outside of the direct examination; I don't see it has any bearing.

The Master: Go ahead and answer the question.

A. The reason for them giving it up was price.

Q. Well, they gave it up, that is the question?

A. Yes.

Q. Now, the Sterling Products Company also tried pistons with other forms of splitting other than that shown in Exhibit 1 before they adopted Exhibit 1?

A. That was some time back in 1925—'22, somewhere in there.

Q. And those were given up either at or prior to the time Exhibit 1 was adopted?

A. I don't know what success they had with them in that time. I joined them when they made that Invar insert piston.

Q. Did you know that the Aluminum Company or Aluminum Industries, Inc., or the Bohn Aluminum and Brass Company, or any of them, were making pistons like or substantially like Plaintiffs' Exhibit 1 at the time that Sterling Products Corporation adopted that piston?

A. I think so.

Q. Had pistons been made by one or more of those companies before that piston was adopted?

A. Yes.

• • • • • • •

[fol. 1077] Q. The breaking of a piston in a motor is quite a serious matter?

A. Not always.

Q. It is difficult to get in there and remove it, isn't it?

A. Oh, you have to take the head off and take the pan off to get at it.

Q. Sometimes when the piston breaks it ruins the cylinders, don't it?

A. Yes.

Q. Now, before you would adopt a piston as standard equipment, you would have to be satisfied it wasn't going to break in the cylinder?

A. We would, if there was a danger of that; we would question that very seriously as to whether it would stand up. And the engineers at that time were prejudiced against slotting the iron pistons, and that is what prevented a bigger showing of slots previous to what has been shown here.

Q. That is, they were afraid of these things?

A. The weakening of the structure and afraid of breakage.

Q. So they wouldn't adopt any aluminum piston?

A. Not aluminum—iron piston.

Q. I mean any iron piston that wouldn't be practically 100% perfect as far as breakage was concerned?

A. Oh, yes, they took a chance on lots of things.

Q. I am asking a question about pistons; answer the question.

A. Well, if it showed signs of being a betterment of what was used previously, they would give it their consideration.

Q. But a piston had to be more perfect with respect to lack of danger of breaking than other equipment?

A. Oh, yes, it was given a front place in the testing, recognized as one of the vital spots of the engine.

Q. It was recognized for a good many years that the iron piston was too heavy, wasn't it?

A. Yes.

Q. And also it wasn't as good a conductor of heat as it should have been?

A. Yes, that is true.

Q. And it was known, at least from 1911 on, that aluminum was lighter and a better conductor of heat than iron?

A. Yes.

Q. And therefore better material for a piston?

A. Yes, and that a sand cast piston was poorer and that was held up for some time because of the lack of better bearing, it scuffed freely.

Q. The sand cast?

A. The sand cast, and that delayed progress in that direction.

Q. But even after the permanent mold piston came in, those things were recognized, as I said, about the advantages of a piston?

A. Oh, yes.

• • • • • • •

[fol. 1078] Q. Were you familiar with this Franquist piston at the time that you were struggling with that Sterling piston before you adopted pistons like Exhibit 1?

A. I was not, but Mr. Flamang and Mr. Bowser possibly were.

Q. And that Franquist piston of course was not adopted by them?

A. No.

Q. You said you had an experience with pistons similar to the Franquist piston. Just what piston did you mean when you said that?

A. It was a trunk type, continuous skirt piston, of light walls and a big rib between the two bosses, and a very large clearance on each side so that the cross-head shoes were comparatively small. The radial expansion of the head of that piston was sufficient to push the end walls out sufficient to pull in the side walls, so that the application of heat actually reduced the diameter of the cross-head section of the piston.

Q. That was a trunk type piston?

A. Trunk type piston and no slots in it at all.

[fol. 1079] Q. What was the name of that piston?

A. They didn't give it any name.

Q. When was that piston?

A. Sometime between January, 1928, and January, 1930.

Q. Was this when you were with the Sterling Company?

A. Yes.

Q. Did you test that piston out?
A. Yes.
Q. In the laboratory?
A. Yes—no, in the shop and in the car on the road.
Q. For the Sterling Products Corporation?
A. Yes.
Q. They didn't adopt that piston, did they?
A. Not as yet.
Q. Well, are they still testing it?
A. I don't know.
Q. Were they when you left there?
A. I couldn't say.
Q. This Spillman piston you talked about, when did the H. & H. Company discontinue the sale of that piston?
A. I don't know. Mr. Charley Marien was the one that had the contract for that piston, and the H. & H. Company—he started the H. & H. Company. They have been in business there in St. Louis for quite a long time.
Q. It has been a good many years ago since they discontinued it?
A. Oh, 1917—'18—something like that, maybe before.
Q. Who made them, do you know?
A. They were made in Cincinnati.
Q. Well, aren't you a little early on that date?
A. Maybe so, I wouldn't be positive about that. Anyway, they were offered to us and I never did try out any of them because we were afraid of the breakage factor on them.
Q. Do you remember what year they were offered to you?
A. Oh, it might have been '20 or '22.
Q. Where did they break?
A. They would break the wings, the ones we had.
Q. They would first collapse before they would break.
A. Oh, yes, yes, they would hammer after they got loose, too loose, they took a permanent set is wha. ed to the breakage.
Q. What do you mean by "hammer"?
A. Well, after these had been pushed in by lack of strength enough to resist the thrust, the diameter would become small, and then they would set up a terrific hammering, then they would knock the wings off.
Q. You mean by hammering, they would flap in the engine?

A. In the engine, yes, cross hammer from the thrust.

[fol. 1080] Q. I suppose that was an objectionable thing, that hammering there, wasn't it?

A. It sure was.

Q. What had to happen when that happened?

A. Maybe you needed a new engine.

Q. Well, at least the pistons had to be removed, didn't they?

A. Yes.

Q. And why would they sometimes have to have a new engine?

A. Well, it might lead to breaking a connecting rod, and that would wind it up. Get loose in there and the head come off the skirt part.

Q. Punch holes in the crankcase and such things as that?

A. Yes, sir.

Q. That is what happens when a piston breaks in an engine sometimes, isn't it?

A. Oh, the skirt parts, that might break off and fall out of the way of the revolving crankshaft, it may set up a little noise, but it wouldn't be more serious than the actual breaking of the piston, it would be taken out immediately and the noise would give indication that something was wrong, so naturally it was replaced.

Q. Sometimes that would happen and sometimes what you said would happen when the piston would break?

A. All kinds of things would happen.

Q. You spoke of the Ricardo piston and talked about one there. You never knew of that piston being used commercially, did you?

A. Oh, I read of it in the English motor papers.

Q. I mean of your own knowledge.

A. No, I don't know of anybody adopting it. I believe that car Mr. Pomeroy built, that all-aluminum car, used them.

Q. When was that?

A. That was quite a long time ago, when Mr. Pomeroy joined the Aluminum Company, I believe.

Q. You mean he used it experimentally in his car?

A. Oh, yes, experimentally. It was discussed throughout the S. A. E. meetings.

(Thereupon adjournment taken to 9:00 A. M. the following day.)

(At 9:00 A. M., Friday, March 24, 1933, the hearing was resumed.)

Further cross-examination.

By Mr. Richey:

Q. Mr. Dorris, did you keep in touch with piston needs and development of pistons while you were employed with the Dorris Company prior to 1920?

A. Yes.

[fol. 1081] Q. Did you ever try out a trunk type aluminum piston in any of your cars?

A. I don't remember a trunk type, but a kind of cross-head type.

Q. That is, it had a solid skirt?

A. Solid skirt, but segregated that from the head at the two shoes.

Q. And something like that Ricardo piston?

A. Closely to that, not exactly.

Q. What was the result of trying that out?

A. Why, they would stick up after it would run, like all pistons; they were both too large and too small at the same time.

Q. As a matter of fact you ran one in a car and had to stop the car and take the pistons out on the road?

A. I did that four times.

Q. And tried to get them to fit, didn't you?

A. Why, apparently there was no room for so-called fitting to correct the real trouble.

Q. And after that test you continued with the iron piston, didn't you?

A. Yes.

Q. Now, after this aluminum piston like the Maynard type came on the market, did your company adopt them?

A. No.

Q. You know those pistons were generally used, don't you?

A. Yes.

Q. This trunk type slipper piston you said was like the Ricardo that you tested out. When you took it out, changed it and put it back, what did you do to it?

A. Oh, there was nothing to do to it. I just got disgusted with it. That was what they called a semi-die cast casting,

supplied by one of the Aluminum Companies, either here or Detroit or Manitowoc.

Q. You say they stuck up, you mean would seize?

A. Yes, would seize.

Q. Did the other engineers at the Dorris Company know about this?

A. Oh, yes, sure.

Q. Did you make any changes in that piston or try to make any changes in it to remedy that?

A. Not seriously. We depended on the Aluminum Company to give us something that would work.

Q. When was that, do you remember?

A. It might have been around 1918 or 1919; it was after the armistice, I believe.

Q. Did you continue to use the iron piston up until your company went into the hands of a receiver?

A. In 1927, yes.

Q. I hand you a drawing. Does that show the iron piston that you used?

A. It looks like one of them.

[fols. 1082-1091] Q. How long did you use the piston shown in that drawing?

A. Well, I won't say that identical piston, but some of the pistons, from about 1915 to 1927.

Q. Was it used just as shown in this drawing, machined that way?

A. I think so. I don't recognize these (indicating).

Q. You refer to the white figure?

A. Yes.

Q. As distinguished from the black one?

A. Yes.

Mr. Richey: I offer this in evidence as Plaintiffs' Exhibit 79.

Q. Was this your standard equipment, this piston?

A. Yes, sir.

Q. What clearance did you allow with this piston?

A. We gauged the pistons with a piece of paper two thousandths thick and two inches wide, so it could be pushed through readily by hand.

Q. What clearance did you allow with the slipper type aluminum piston you said you brought out?

A. I don't remember exactly; it was about three and a half, possibly, or maybe nearly twice that.

Q. You said you tested the equipment in your automobile and cars of the company that you drove. What type of driving did you do when making those tests?

A. Went out to break them up.

• • • • • • •

[fol. 1092] In United States District Court

Report of William B. Woods, Special Master

Filed January 27, 1934

[Case No. 4045]

To the Honorable Paul Jones, S. H. West and Geo. P. Hahn, Judges of the District Court of the United States, for the Northern District of Ohio, Eastern Division:

Pursuant to orders made and entered in each of these causes on September 14, 1932, at a term of this court held in the City of Cleveland, said District, the undersigned, Wm. B. Woods, Special Master in Chancery, has proceeded to take and hear the evidence offered by the respective parties and to report his findings of fact and conclusions of law thereon, along with his recommendations concerning the relief demanded and concerning the final disposition of these causes, to this court; therefore,

I, Wm. B. Woods, as Special Master in said causes, do respectfully report that I have proceeded to investigate the matters so referred to me; that I have been attended by the parties and their respective counsel at my office at 1214 Terminal Tower Building, Cleveland, Ohio; that pursuant to said order I proceeded to hear witnesses and counsel, to receive and consider testimony, affidavits, exhibits, and other proofs heretofore filed herein, to examine and consider pleadings, proofs, briefs, arguments and any and all other matters relating to the questions involved or the issues raised in these causes; that I have ruled upon the admissibility of evidence and have preserved all evidence offered for final ruling thereon by the court; that I have observed such tests and experiments as the parties performed, and all sessions have been held within this District and Division of this court; and that I have heard and con-

sidered all proofs and arguments pertinent to the issues of law and fact in these causes. Such hearings have been had, arguments of counsel have been had, briefs of counsel have been filed, together with suggested findings of fact and conclusions of law, and upon consideration of the same I find and report as follows:

Pleadings and Issues

The three suits were consolidated for hearing before the Master and are heard upon the same evidence by stipulation. The three suits were filed October 17, 1931, and are [fol. 1093] the conventional patent infringement suits upon five patents, involving questions of title, validity and infringement, and are for an injunction and an accounting.

Plaintiff, The Cleveland Trust Company, is the legal owner of the title to all of the patents in suit except the Maynard patent, as to which it appears to have only a half interest. Chrysler Corporation named as co-plaintiff, is owner of the other half of the Maynard patent and is beyond the jurisdiction of the court, and joined as a party plaintiff without its consent. From the evidence it appears that the Trust Company has an option on Chrysler's interest dated prior to the filing of these suits, so that The Cleveland Trust Company is the only party plaintiff before the court.

Defendants are three local dealers of automobile accessories, who have offered for sale, sold and used the pistons charged to infringe, which were made by the Sterling Products Corporation of St. Louis, Missouri, which company is conducting and paying for the defense of the three suits. The Sterling Products Corporation was named in the Bills of Complaint, but on motion was dismissed and its name expunged.

Five patents are involved with a total of eighty-one claims, of which some fifty-two claims are alleged to be infringed. At the outset, only two devices were involved, i.e. a Sterling piston and a Ray Day piston, but as the trial progressed the number of devices claimed to be involved was increased to seven, five Sterling pistons and two Ray Day pistons. The name of the manufacturer, "Sterling" and "Ray Day" are used for convenience.

The subject matter of the patents "relates to pistons" for internal combustion engines as each patent recites, and the following are the patents upon which plaintiff relies:

No.	*Patentee*	*Granted*	*Application*	*Filed*
1,815,733	Gulick	July 21, 1931	204,661	Nov. 30, 1917
1,763,523	Jardine	June 10, 1930	364,997	Mar. 11, 1920
1,655,968	Maynard	Jan. 10, 1928	434,467	Jan. 3, 1921
1,256,265	Schmiedeknecht	Feb. 12, 1918	180,511	July 14, 1917
1,402,309	Mooers	Jan. 3, 1922	172,380	June 2, 1917

In each cause the pleadings comprise the bill of complaint and the answer, and there are bills of particulars and several stipulations filed in each cause.

None of the patents in suit have been adjudicated by a District Court, although the applications, particularly of [fol. 1094] the Gulick patent, have been interference in the Patent Office. A consent decree was also entered in one case involving the Gulick patent.

The Cleveland Trust Company, as trustee, has granted licenses under the patents in suit and pistons involving the inventions of these patents have been made, sold and used in large quantities. A great part of the pistons sold are claimed to be actual or substantial duplicates of the pistons of the Maynard patent. Large sums in royalties have been paid to the trustee under the patents, and these causes seem to be the first real test of the patents.

As was said by Mr. Justice Bradley in Railway Co. v. Sayles, 97 U. S. 554 (1878) at p. 556: "The evidence in the case is very voluminous, especially in reference to the question of priority of invention, and would be well calculated to present questions of much embarrassment upon the validity of the patent."

Of a similar situation in the recent aluminum molding case where there were also five patents with 29 claims involved, while here 51 claims of five patents are urged to be infringed, in Aluminum Company of America v. Sterling Products, 66 F. (2d) 958 (1933), the Court of Appeals of the 8th Circuit affirmed the Eastern District Court of Missouri and quoted Judge Faris, the trial judge of the District Court, who had said: "The confusing and unnecessary verbosity and prolixity of the patents, the wide range of defenses, the size of the record and the length of the briefs have rendered the case unnecessarily difficult and confusing."

Pistons, Subject Matter of the Suit

The inventions relate to pistons for internal combustion engines. These should be as light as possible and in accordance with accepted construction, pistons are hollow cylinders, closed at one end and open at the other, a connecting rod being secured interiorly by means of a transverse pin. Bearings for the pin are the bosses which project inwardly from the side walls of the piston. The objects of the inventions are to provide a piston which will not expand against the cylinder wall to such an extent as to seize or stick, and at the same time there must be provision for lubrication. A successful and efficient piston is one which prevents the pumping of oil and the freezing due to excessive expansion. [fol. 1095] In the present state of the art, pistons are constructed with the head or the cylindrical ring portion having a relatively large clearance with reference to the diameter of the cylinder and a skirt portion more closely fitting the same, which holds the piston in proper alignment and prevents slapping. Pistons must also be so constructed that the oil cannot creep past the skirt and drop back into the cylinder, which results in the formation of carbon.

The difficulty to be overcome is to get a proper fit, for if the piston is of sufficient size to fit the cylinder properly while at maximum temperature, gas and oil will leak by when the piston is cool, as at the starting of the engine. There is also the problem of providing a piston of minimum weight with maximum structural strength.

Large numbers of the pistons are in constant use in automobiles, and one piston is required for each cylinder. Formerly cast iron pistons were generally used and there was little difficulty because of expansion. With the advent of aluminum, making possible a lighter weight piston, a new problem was introduced because of the difference in the coefficients of expansion.

Claims of Patents Charged to Be Infringed.

The plaintiff selects to exemplify the inventions of the patents and as the basis of the charge of infringement some 52 claims, so many that the setting of them out in full is omitted. The claims of each patent as applicable to each piston exhibit are of the following claim numbers:

Exhibit CCC (Defendents') Chevrolet "4" Piston.

Gulick Patent, Claims 1, 13, 15, 18, 22, 27, 28, 29, 30, 33, 35, 36, 37, 38, 41, 42 and 43.
Jardine Patent Claims 1, 8 and 10.
Maynard Patent, Claim 6.
Mooers Patent, Claims 3, 4 and 11.

Exhibit BBB (Defendents') Chevrolet "6" Piston.

Gulick Patent, Claims 1, 13, 15, 18, 22, 27, 28, 29, 30, 33, 35, 36, 37, 38, 41, 42 and 43.
Jardine Patent Claims 1, 8 and 10.
Maynard Patent, Claim 6.
Mooers Patent, Claims 1, 2, 3, 4, 6, 10 and 11.

[fol. 1096] Exhibit 1 (Plaintiff's) Sterling Piston.

Gulick Patent, Claims 1, 11, 12, 13, 15, 18, 30, 33, 35, 38, 41, 42 and 43.
Jardine Patent, Claims 1, 2, 4, 5, 6, 7, 8, 9, 10 and 11.
Maynard Patent, Claims 1, 2, 3, 4, 5, 6, 7, 8, 9, 10 and 11.
Mooers Patent, Claims 1, 2, 6 and 10.
Schmiedeknecht, Claims 1 and 3.

Exhibit 3-J (Defendents') Ford "8" Piston.

Gulick Patent, Claims 1, 4, 15, 25, 28, 33, 34, 36, 42 and 43.

Exhibits 3-O (Defendents') Plymouth Piston.

Gulick Patent, Claims 1, 4, 15, 25, 33, 36, 42 and 43.
Mooers Patent, Claims 3, 4 and 11.

Exhibit 8 (Plaintiff's) Ray Day Piston, Split.

Gulick Patent, Claims 1, 15, 22, 27, 28, 29, 30, 33, 36, 37, 38, 42 and 43.
Jardine Patent, Claim 1.
Mooers Patent, Claims 3, 4, 8 and 11.

Exhibit 9 (Plaintiff's) Ray Day Piston, Unsplit.

Mooers Patent, Claims 3, 4, 8 and 11.

Findings of Fact

(1) That The Cleveland Trust Company, plaintiff, is and was at the time the suits were brought, a corporation of

and a citizen and resident of the State of Ohio, having its principal place of business at Cleveland, Ohio, in this District, as alleged in the Bill of Complaint.

(2) That Chrysler Corporation, plaintiff, is and was at the time the suits were brought, a corporation of and a citizen and resident of the State of Michigan, having its principal place of business at Detroit, Michigan, as alleged in the Bill of Complaint, and is not now and was not, at the time suit was brought, within the jurisdiction of this court.

(3) That Sterling Products Corporation is a Missouri corporation, a non-resident of this District and has not been served with process in any of the above-entitled causes, and that the naming of Sterling Products Corporation has heretofore been stricken from the Bills herein by order of this District Court.

[fol. 1097] (4) That The Schriber-Schroth Company, defendant in Case No. 4045, is and was at the time the suits were brought, a corporation of and a citizen and resident of the State of Ohio and it has and had a regular and established place of business at Cleveland, Ohio, as alleged in the Bill of Complaint.

(5) That The Aberdeen Motor Supply Company, defendant in Case No. 4046, is and was at the time the suits were brought, a corporation of and a citizen and resident of the State of Ohio and it has and had a regular and established place of business at Cleveland, Ohio, as alleged in the Bill of Complaint.

(6) That The F. E. Rowe Sales Company, defendant in Case No. 4047, is and was at the time the suits were brought, a corporation of and a citizen and resident of the State of Ohio, and it has and had a regular and established place of business at Akron, Ohio, as alleged in the Bill of Complaint.

(7) That Sterling Products Corporation was named a defendant in the Bill of Complaint in each of the suits here combined but it has filed no answers; however, its counsel did petition to appear specially to object to any jurisdiction over it in any of these cases, which leave was granted heretofore by the District Court.

(8) That there is no evidence in these causes showing that Sterling Products Corporation has entered its appear-

ance in any of them; or that Sterling Products Corporation controlled the proceedings in these causes to the exclusion of any or all of the defendants, The Schriber-Schroth Co., The Aberdeen Motor Supply Co., or The F. E. Rowe Sales Co.; but that the respective defendants named herein have controlled the proceedings in these causes.

(9) That The Aluminum Company of America has been granted a non-exclusive license under the patents in suit; Bohn Aluminum & Brass Corporation has been granted a non-exclusive license under the patents in suit; and Aluminum Industries, Inc., (formerly The Kant-Skore Piston Company) has been granted a non-exclusive license under the patents in suit.

(10) That Chrysler Corporation holds title to an undivided one-half interest in the Maynard patent in suit and was requested to join in suits as a party plaintiff against Sterling Products Corporation or its customers, and refused, but was not asked to join in any of these particular suits.

[fol. 1098] (11) That the piston of the Gulick patent embodies the fundamental structure of the Franquist patent No. 1,153,902 and that the piston of the Franquist patent is operative to substantially compensate for expansion; that the piston of the Gulick patent employs essentially the webs of the Spillman & Mooers patent 1,092,870 and of the Chenard & Walcker French patent 468,595 and that the piston of the Spillman & Mooers and of the Chenard & Walcker patents are operative; that the web construction of the Gulick patent differentiates from those of Spillman & Mooers and Chenard & Walcker simply in matter of design involving mechanical skill; and that splitting of the skirts of the Franquist, Spillman & Mooers and Chenard & Walcker patents by through slotting was within the purview of one skilled in the art.

(12) That by admissions of plaintiff's witness, Gulick, Gulick abandoned and had in public use in this country during the year 1911, a piston exemplified by Ex. 48, and during the year 1914, a piston exemplified by Ex. 51; and that by admission of plaintiff's counsel, both pistons embody the subject matter of claims 1, 4, 15, 25, 27, 28, 33, 34, 36, 42 and 43 and Ex. 51 additionally of claim 38.

(13) That the subject matter of claims in issue in addition to claims 1, 4, 15, 25, 27, 28, 33, 34, 36, 38, 42 and 43 differentiates from the Gulick 1911 and 1914 pistons by matters involving mechanical skill.

(14) That the Gulick specifications while pending in the Patent Office was broadened beyond the original disclosure while pistons were produced, used and sold by the following parties:

Elmer C. Long
Gustave C. Monckmeier
Walter L. Schoengarth
Albert L. Spillman
Kant-Skore Mfg. Co.
Steven D. Hartog
Frank Jardine
Aluminum Company of America
Howard E. Maynard
Maxwell Motor Co.
Ray Day
William E. Venner

(15) That after the filing of the Gulick application, his application was materially modified, both as to the specification and claims without warrant therefor in the original disclosure.

[fol. 1099] (16) That the Gulick patent does not describe in sufficient detail to enable one skilled in the art to reproduce the same, the length and thickness of the webs required to secure flexibility.

(17) That the Jardine patent embodies the fundamental structure of Franquist patent No. 1,153,902, that it employs essentially the slipper piston structure of the Ricardo patent No. 1,294,833, and that the splitting of the slippers of the Ricardo patent was within the purview of one skilled in the art.

(18) That the Jardine patent piston differs from the piston of the Long patent 1,872,772 in matters involving mere mechanical skill.

(19) That the Jardine patent piston differs from the piston of the Gulick patent in matters involving mere mechanical skill.

(20) That the Jardine patent does not describe in sufficient detail to enable one skilled in the art to reproduce the same, the length and thickness of the webs required to secure flexibility.

(21) The Maynard patent embodies the fundamental structure of the Franquist patent No. 1,153,902, and that the splitting of the skirt by through and through slotting was within the purview of one skilled in the art.

(22) That the Maynard patent piston differs from the piston of the Jardine patent 1,763,523 in matters involving mere mechanical skill.

(23) That the Maynard patent piston differs from the piston of the Long patent 1,395,441 in matters involving mere mechanical skill.

(24) That the Maynard patent piston differs from the piston of the Gulick patent in matters involving mere mechanical skill.

(25) That the Maynard patent piston differs from the piston of the Schmiedeknecht patent in matters involving mere mechanical skill.

(26) That the Maynard patent piston differs from the piston of the Ricardo patent 1,294,883 in matters involving mere mechanical skill.

(27) That the Maynard patent piston differs from the piston of the Hives patent 140,998 in matters involving mere mechanical skill.

(28) That the Mooers patent embodies the fundamental structure of the Franquist patent No. 1,153,902, and that [fol. 1100] the employment of narrow connectors was within the purview of one skilled in the art.

(29) That the Mooers patent piston differs from the piston of the Spillman & Mooers patent No. 1,092,870, in suit in matters involving mere mechanical skill.

(30) That the Mooers patent piston differs from the piston of the Chenard & Walcker patent No. 468,595 in matters involving mere mechanical skill.

(31) That the Mooers patent piston differs from the piston of the Gulick 1911 and 1914 pistons (Exs. 48 and 51) in the matters involving mere mechanical skill.

(32) That after the filing of the Mooers application, his application was materially modified both as to specification and claims without warrant therefor in the original disclosure.

(33) That the Schmiedeknecht patent involves the fundamental structure of the Franquist patent No. 1,153,902 or of any trunk piston; that it employs essentially the construction and arrangement of webs and mounting of wrist pin bosses of the Pugh British patent 17,256 of 1907 and the arrangement of the webs of the Ferry British patent 12,772 of 1914; and that the construction of the Schmiedeknecht patent differs from those of Pugh and Ferry patents and from a trunk piston in matters of design involving mere mechanical skill.

(34) That by admissions of plaintiff's witness Gulick he conceived a piston like Exhibit 51 in 1908, but that nothing was done except making sketches until May 1911; that a set of pistons having the construction and mode of operation of Ex. 48 was given a block test in a motorcycle engine in this country in May 1911 and then scrapped; that another set like Ex. 48 was given another block test in an automobile engine for 24 hours in July 1911 and scrapped; that another set of pistons like Ex. 48 was placed in an automobile engine in July 1911 and the engine operated to run in the pistons; that the engine with those pistons was then placed in an automobile belonging to his company and given a road test in July and August, 1911 and that the pistons operated successfully; that thereafter the automobile was used with those pistons in it from July to November, 1911, and scrapped; that each of these tests satisfied Gulick as to the utility of the mode of slotting of those pistons; and that Gulick alleged in his preliminary statement before the Patent Office that the road test in July and [fol. 1101] August 1911 was one in which the pistons in said engine were first successfully operated. That no further experimenting was done by Gulick with pistons until May 1914 when he proceeded with the preparation of drawings of a construction like that shown in the application and in July with the construction of the piston of aluminum like Ex. 51; that such piston like Ex. 51 was not given a block test for the reason given by Gulick that he was satisfied with the previous tests as to the success of the slotting; that a set of these pistons like Ex. 51 was placed in an Amplex car, his own property, and the car driven by himself over 5,000 miles from July 16, to November 11, 1914, when the pistons were taken out and permitted to go into the scrap pile and disposed of but that Gulick made no serious effort

to regain these pistons. That the test of the 1911 and 1914 pistons was not concealed, but known to various parties and that the automobiles in which they were placed were used like any other automobile, the 1911 car for business of his company and in his own business and in the 1914 car for his personal business.

That in 1911 or 1912 he took a drawing like that of the patent to one Offield, a patent lawyer, and left it with him until 1912 or 1913 when he took it to one Pond, another patent lawyer; that Gulick was not financially embarrassed from 1911 to 1917 sufficiently not to make application for a patent but that in 1913 he raised $600 to put into the Amplex Company and in that period he filed an application on a motor and another application in 1916. That there was no question about the title of the application of the patent in suit being in Gulick. That Packard Motor Company, the intervening titleholder of the application of the patent in suit obtained an option in March, 1916, which was exercised about August, 1917. That neither Gulick nor Packard made any effort to file an application between March, 1916, and November 30, 1917 and that Packard Motor Company, between August 1 and November 16, 1917, filed a number of applications, at least twelve of which were for other than aircraft and motors for aircraft. That no effort was made to place the embodiments of the 1911 and 1914 pistons in the application of the Gulick patent; that no drawing of either was retained; that neither the 1911 nor 1914 pistons were disclosed to Milton Tibbetts, Patent Attorney of Packard Motor Co.; that the 1914 piston did not come to light until November 8, 1922 when Gulick made the sketch, Ex. 33, [fol. 1102] bearing that date at Cleveland in preparation for interference and that Gulick did not at that time tell anything about the 1911 piston.

(35) That the Monckmeier pistons, Exs. 3-V and 3-W, were in use by Gustave C. Monckmeier in this country in his automobile for more than two years prior to the Gulick application for patent; that such pistons embodied a T-slot disposed intermediate the wrist pin bosses with the horizontal of the T below the bottom ring land and with the vertical of the T intermediate the bosses; that such T-slotting functioned to compensate for expansion; that any reduction in head diameter to the horizontal slot involved mere mechanical skill; that such use of the Monckmeier pis-

tons more than two years prior to the application of the Gulick patent in suit was open and not insecret but known to others and in fact public; and that the testimony of Monckmeier and his corroborating witnesses is reasonably satisfactory and reliable.

(36) That for more than two years prior to the application of the patent in suit, Walter L. Schoengarth made and sold at Ironwood, Michigan, pistons of the construction shown and described in the Schoengarth patent 1,174,092 but omitting the adjusting device; that such pistons functioned to compensate for expansion; that any reduction of head diameter to circumferential slot was a matter within the purview of a skilled mechanic; and that the Schoengarth pistons were publicly used and sold in this country more than two years prior to Gulick's application for patent. That for more than two years prior to the application of the patent in suit, Walter L. Schoengarth made and sold at Ironwood, Michigan, pistons of the construction shown and described in the Schoengarth patent 1,174,092. That the testimony of Schoengarth is reasonably corroborated, satisfactory and reliable. That the omission of the adjusting devices is within the purview of any skilled mechanic.

(37) That one Elmer C. Long, in March, 1916 exhibited to Louis Stellman and William Venner at Syracuse, New York, a six slotted piston of the construction shown by Exs. Y and A respectively. That six slotted pistons of the construction shown in Exhibit A and also in Exhibit F were sold by Long to Venner while Venner was at South Bend, Indiana, as early as 1917, and that during the year, 1917, Venner sold such pistons as replacements in Franklin [fol. 1103] automobiles; and that Venner continued to sell such pistons furnished him by Long and of the construction shown in Exs. E, F and G from 1918 to 1926. That a piston of the construction shown in the Long patent 1,395,441 with a T-slot was tested at Franklin Automobile Co., at Syracuse, New York, July, 1918 as admitted by plaintiff's witness, Burns. That during the year 1918, Elmer C. Long manufactured and sold six-slotted pistons of the construction shown in Exs. E, F, G and R for replacement in automobiles and that such pistons were actually used during the year, 1918 in automobiles; that Long continued the manufacture and sale of such pistons during the year 1919,

until the latter part of that year when the manufacture of the same for replacement purposes was sold to one Weems in Quincy, Illinois; and that Weems continued the manufacture and sale of pistons of the construction shown in Exs. E, F, G and R from the latter part of 1919 to 1930; and that the manufacture and sale of such pistons was thereafter then continued by Chadwick. That in March, 1919, a piston of the construction shown in Ex. F was tested by Franklin Automobile Company at Syracuse, New York, and that on the same date a royalty agreement was entered into between Long and Franklin; that as early as April, 1920, Franklin Automobile Company actually furnished such pistons (Ex. F) for servicing of automobiles for replacement purposes; that as early as November 11, 1920, Franklin Automobile Company used such pistons like Ex. E in production as standard equipment; and that Long pistons of the construction of Exs. E, F, G and FFF were used by Franklin Automobile Company in servicing and regular production until 1926. That the Long pistons of 1917-1926 were successful pistons and from 1917 to 1922 were the only commercial pistons which automatically compensated for expansion. That on January 29, 1920, one Gunn, an engineer of Packard Motor Company, then assignee of the application of the Gulick patent in suit described and illustrated the Long piston in "Automotive Industries" of that date (Ex. D-4) and that Packard Motor Company had notice of the Long piston on that date. That as early as July 7, 1921, Weems, then manufacturing and selling Long pistons of the construction shown in Exs. E, F, G and R advertised such pistons in the "Motor Age" of that date (Ex. U). That as early as December 28, 1921, Elmer C. Long, advertised the Long piston of the construction shown in Ex. FFF in "Motor World" of that date (Ex. 5-C).

[fol. 1104] (38) That defendants' pistons, Ex. 1, BBB, CCC, 3-J, 3-O and 8 do not embody the structure, function and mode of operation of the Gulick patent in suit.

(39) That defendants' pistons, Exs. 1, BBB, CCC and 8 do not embody the structure, function and mode of operation of the Jardine patent in suit.

(40) That defendants' pistons, Exs. 1, BBB, CCC do not embody the structure, function and mode of operation of the Maynard patent in suit.

(41) That defendants' pistons, Exs. 1, BBB, CCC, 3-O, 8 and 9 do not embody the structure, function and mode of operation of the Mooers patent in suit.

(42) That defendants' piston, Ex. 1 does not embody the structure, function and mode of operation of the Schmiedeknecht patent in suit.

(43) That the Gulick patent in suit describes a piston structure in which flexible webs extend from the wrist pin bosses to the skirt and are surrounded by the skirt; that the prior art requires restriction of the patent to the employment of webs which are of sufficient length and thinness to permit flexing of these webs at the top of the skirt; that Ex. 1 does not employ such characteristic webs; that Ex. 8 does not employ such characteristic webs; and that Exs. BBB, CCC, 3-J and 3-O employ no webs at all.

(44) That the Jardine patent in suit describes a piston structure in which flexible webs extend from the wrist pin bosses to the slippers; that the prior art requires restriction of the patent to the employment of webs which are of sufficient lengths and thinness to permit flexing of these webs at the top of the skirt; that Ex. 1 does not embody such characteristic webs; that Ex. 8 does not employ such characteristic webs; and that Exs. BBB and CCC employ no webs at all.

(45) That the Maynard patent in suit describes a piston structure in which automatic compensation is not secured unless the groove E is cut into the webs F sufficiently and beyond the inside of the piston head flange to secure web extensions at the top of sufficient length and thinness to permit flexing of these web extensions at the top of the skirt; that Ex. 1 does not employ such characteristic webs; and that Exs. BBB and CCC employ no webs at all.

(46) That the Mooers patent in suit describes a piston structure having narrow connectors of restricted cross sec- [fol. 1105] tions extending from the head flange to the top of the skirt; that the prior art requires such a restriction; that in Exs. 1, BBB, CCC, 3-O, 8 and 9 the connectors are heavy and not of a structure as described in the Mooers

patent and that in Exs. 8 and 9 the connectors are from the head to the wrist pin bosses.

(47) That the Schmiedeknecht patent describes a piston structure in which each boss is supported at its ends, with one end of the boss supported from the head and the other end of the boss supported from the web; that the claims in issue are so restricted and must be so restricted by the prior art; and that in Ex. 1 each wrist pin boss is supported intermediate its ends on the web and not as described and claimed in the Schmiedeknecht patent.

(48) That in Ex. 1 automatic compensation is accomplished by what has been termed the "Keystone relief" and not by any web flexibility at the top; that the circumferential slotting terminates at about the inside of the head flange and that such a construction and arrangement does not secure the operation contemplated by the Gulick, Jardine and Maynard patents.

(49) That Ex. 8 relies upon compensation, particularly at the top by twisting of the connectors from the head to the wrist pin bosses and that such construction and arrangement does not secure the mode of operation contemplated by the Gulick and Jardine patents.

(50) That Exs. BBB, CCC, 3-J and 3-O do not employ any webs connecting the head with the skirt, and, therefore, no webs of such flexibility as contemplated by the Gulick, Jardine and even Maynard patents, if the latter has such webs having such characteristics.

(51) That defendants' pistons, Exs. 1, BBB, CCC, 3-J, 3-O, 8 and 9 employ the essential structure, function and mode of operation of the prior art, more particularly the Franquist patent No. 1,153,902 and Exs. 8 and 9, also the Chenard & Walcker French patent No. 468,595.

Conclusions of Law

(1) That The Cleveland Trust Company hold the entire right, title and interest to all of the patents in suit, except the Maynard patent, and as to this patent it holds an undivided one-half of the entire right, title and interest, all as trustee of an expressed trust created by plaintiff's Ex. 26.

[fol. 1106] (2) That under Equity Rule 37 The Cleveland Trust Company may sue in its own name without joining

with it any of the beneficiaries under the expressed trust created by plaintiff's Ex. 26.

(3) That at the time suits were brought, the Aluminum Company of America held, and it now holds, a non-exclusive license from The Cleveland Trust Company under all of the patents in suit.

(4) That the Aluminum Company of America is not a necessary party to these suits.

(5) That Chrysler Corporation is, and was at the time these suits were brought, an indispensable party to the suits and, being outside the jurisdiction of this court, and having refused to voluntarily join as a party plaintiff, it was properly joined as a co-plaintiff without its consent.

(6) That this court has jurisdiction of the several defendants in the three suits, viz., The Schriber-Schroth Co., The Aberdeen Motor Supply Co. and The F. E. Rowe Sales Co.

(7) That this court has no jurisdiction of Sterling Products Corporation, a Missouri corporation.

(8) That this court has no jurisdiction nor power to enter any memorandum or declaratory judgment in the above-entitled causes that said Sterling Products Corporation is estopped by the doctrine of res adjudicata in any other suit involving the plaintiffs in the above entitled cause and said Sterling Products Corporation.

(9) That plaintiff, The Cleveland Trust Company, was entitled to acquire the patents in suit.

(10) That by stipulation these three suits were tried together, it being agreed that the evidence adduced in any one of the three causes would be used in any one of the other causes with the same force and effect as if adduced in the cause in which it is used.

(11) That the Gulick patent is invalid and void as to all claims in issue.

(12) That the Gulick patent is invalid and void as to all claims in issue for want of invention.

(13) That the Gulick patent is invalid and void as to claims 1, 4, 15, 25, 27, 28, 33, 34, 36, 38, 42 and 43, because

(a) of abandonment—at large—by Gulick and plaintiff and intervening privities in title, and (b) of public use by [fol. 1107] Gulick in this country for more than two years prior to his application for patent.

(14) That the Gulick patent is invalid and void as to all claims in issue, additional to those recited in conclusion 13, (a) for want of invention over the pistons abandoned by Gulick and plaintiffs and intervening privities in title for want of invention, and (b) over the pistons in public use by Gulick more than two years prior to his application for patent.

(15) That the Gulick patent is destroyed and invalid in toto, because (a) of the attempt to broaden the original application as against intervening rights, (b) of material changes in the specification and claims after filing, and (c) of failure to describe and claim as required by R. S. Sec. 4888.

(16) That the Gulick patent is invalid and void as to claims 1, 4, 15, 25, 27, 28, 34, 36, 38, 42 and 43, because (a) the subject matter thereof was in public use in this country by Gustave C. Monckmeier more than two years prior to Gulick's application for patent, and (b) the subject matter thereof was in public use and on sale in this country by Walter L. Schoengarth more than two years prior to Gulick's application for patent.

(17) That the Gulick patent is invalid and void as to all claims in issue additional to those recited in conclusion 16, for want of invention over pistons (a) in public use in this country by Gustave C. Monckmeier more than two years prior to Gulick's application for patent, and (b) in public use and on sale in this country by Walter L. Schoengarth more than two years prior to Gulick's application for patent.

(18) That the Jardine patent is invalid and void as to all claims in issue.

(19) That the Jardine patent is invalid and void as to all claims in issue for want of invention over the prior art.

(20) That the Jardine patent is invalid as to all claims in issue because of failure to describe and claim as required by R. S. Sec. 4888.

(21) That the Maynard patent is invalid and void as to all claims in issue.

(22) That the Maynard patent is invalid and void as to all claims in issue for want of invention over the prior art.

[fol. 1108] (23) That the Maynard patent is invalid as to all claims in issue because of failure to describe and claim as required by R. S. Sec. 4888.

(24) That the Mooers patent is invalid and void as to all claims in issue.

(25) That the Mooers patent is invalid and void as to all claims in issue for want of invention over the prior art.

(26) That the Mooers patent is destroyed and invalid in toto because (a) of the attempt to broaden the original application as against intervening rights, (b) of material changes in the specification and claims after filing, and (c) of failure to describe and claim as required by R. S. Sec. 4888.

(27) That the Schmiedeknecht patent is invalid and void as to all claims in issue.

(28) That the Schmiedeknecht patent is invalid and void as to all claims in issue for want of invention over the prior art.

(29) That the Gulick 1911 piston, Ex. 48 was abandoned to the public by Gulick, plaintiff and intervening privities in title.

(30) That the Gulick 1914 piston, Ex. 51 was abandoned to the public by Gulick, plaintiff and intervening privities in title.

(31) That the Gulick 1911 piston, Ex. 48, was in public use in this country by Gulick for more than two years prior to his application for patent.

(32) That the Gulick 1914 piston, Ex. 51, was in public use in this country by Gulick for more than two years prior to his application for patent.

(33) That the Monckmeier pistons, Exs. 3-V and 3-W, were in public use in this country for more than two years prior to Gulick's application for patent.

(34) That the piston disclosure in the Schoengarth patent 1,174,092 was in public use and on sale in this country for more than two years prior to Gulick's application for patent.

(35) That a piston of the construction disclosed in the Schoengarth patent 1,174,092, but without the adjusting devices, was in public use and on sale in this country for more than two years prior to Gulick's application for patent.

[fol. 1109] (36) That the sale and use of pistons and activities in the production and development of pistons by the following parties constitute adverse and intervening rights as against Gulick, plaintiff and intervening privities in title of the Gulick patent in suit, Elmer C. Long, Gustave C. Monckmeier, Walter L. Schoengarth, Albert L. Spillman and Kant-Skore Mfg. Co., Stephen D. Hartog, Frank Jardine and Aluminum Company of America, Howard E. Maynard and Maxwell Motor Co., Ray Day, William E. Venner, W. K. Weems and Charles Chadwick.

(37) That defendants' pistons, Exs. 1, BBB, CCC, 3-J, 3-O and 8 do not infringe the Gulick patent in suit.

(38) That defendants' pistons, Exs. 1, BBB, CCC, and 8 do not infringe the Jardine patent in suit.

(39) That defendants' pistons, Exs. 1, BBB and CCC do not infringe the Maynard patent in suit.

(40) That defendants' pistons, Exs. 1, BBB, CCC, 3-O, 8 and 9 do not infringe the Mooers patent in suit.

(41) That defendants' piston, Ex. 1, does not infringe the Schmiedeknecht patent in suit.

(42) That prior art not cited in the answer may be used to show want of invention, particularly as to use of expedients.

(43) That prior art not cited in the answer may be used to restrict claims of patents in suit.

(44) That plaintiff is not entitled to the relief prayed for in the Bills of Complaint, or any part thereof.

(45) That said Bills of Complaint be dismissed.

(46) That defendants have and recover against the plaintiff the costs of suit.

Memorandum

Parties, Jurisdiction, Title and Joinder

Chrysler Corporation as Party Plaintiff

At the outset defendants raise two questions which concern parties, jurisdiction, title and joinder. In each suit the defense is made (1) that there is a defect of parties, since Chrysler Corporation is a joint owner of the Maynard patent, and (2) that the Aluminum Company of America is a necessary party defendant.

The Bill of Complaint alleges that plaintiff, The Cleveland Trust Company, is the owner of an undivided one-half interest in the Maynard patent, and that the other one-half [fol. 1110] is owned by Chrysler Corporation which is beyond the jurisdiction of this court. Plaintiff contends that it has fulfilled the requirements of the law by pleading that Chrysler Corporation has been asked to join in the suit, has refused and is therefore joined as a party plaintiff without its consent. Defendant says that a previous refusal of Chrysler Corporation to join in a suit under the Maynard patent is not justification for a joinder in this case without first having obtained its consent.

Plaintiff relies upon Independent Wireless Telegraph Co. v. Radio Corporation of America, 269 U. S. 459 (1926), which defendant attempts to distinguish on the facts as here presented. The defense is raised in defendants' answers, paragraphs 12 and 23, and is applicable only as to the Maynard patent. The record shows that plaintiff has an option, Ex. B-5, whereby upon payment of $1.00 the other one-half can be secured. No cases have been cited in the Patent Law where a patent owner has attempted to enforce the patent by joining the other co-owner without his consent, although there are many cases in the general law as appears from defendants' citations.

In the Independent Wireless case, Radio Corporation had obtained an exclusive license under the DeForest patents, except for a personal, non-exclusive, non-transferable license in the DeForest Radio Telephone & Telegraph Company, and DeForest also held legal title to the patents. The DeForest Company was asked to join as a party plain-

tiff and refused, and was thereupon joined by the Radio Corporation without its consent as a party plaintiff. The Supreme Court held that under the circumstances an exclusive licensee was justified in joining the owner of the legal title to the patents without its consent. While Mr. Chief Justice Taft said at p. 468:

"The presence of the owner of the patent as a party is indispensable not only to give jurisdiction under the patent laws but also, in most cases, to enable the alleged infringer to respond in one action to all claims of infringement for his act, and thus either to defeat all claims in the one action, or by satisfying one adverse decree to bar all subsequent actions,"

and when it came to deciding the case then before the court it was held that the making of the DeForest Company a [fol. 1111] party plaintiff was sufficient, for he further said at p. 473:

"The objection by the defendant that the name of the owner of the patent is used as a plaintiff in this suit without authority is met by the obligation the owner is under to allow the use of his name and title to protect all lawful exclusive licensees and sub-licensees against infringers, and by the application of the maxim that equity regards that as done which ought to be done."

Thus, the assignment of the one-half interest from Chrysler Corporation to the plaintiff set up a strong fiduciary relation between the parties as to the Maynard patent, as did the license in the Wireless case and the obligation was on the Chrysler Corporation as co-owner not to defeat the rights which it had agreed to assign or to detract from them in any way.

The Cleveland Trust Company is here proceeding to protect its licensees and sub-licensees under the one-half interest in the Maynard patent which has been assigned to it. In Collins v. Hupp Motor Car Corporation, 22 F. (2d) 27 (1927), the Court of Appeals of the 6th Circuit followed the Supreme Court's ruling in Independent Wireless v. Radio Corporation, supra, and Judge Knappen said, pp. 30 and 31, of the legal title of the plaintiff to the patent there in suit "It did not escape being an exclusive license merely because it was for an undivided

beneficial interest in the patent, and although limited to the automobile manufacturers' trade," and went on to say that "Blackmore held the title to the patent in trust for Collins as well as for himself, and upon plain principles of equity was under obligation to allow his name to be used in proceedings to redress the joint grievance."

While the rule of Patent Law is that patent monopolies cannot be broken up into several monopolies and all be effective in the same territorial limits, Gayler v. Wilder, 10 Howard 477 (1850), this is not such a case as will warrant denying relief to the plaintiff on this ground.

Aluminum Company of America as Party Plaintiff

Prior to April, 1924, The Cleveland Trust Company had good title to the Mooers and Gulick patents and at that time gave a license to the Aluminum Company of America to make aluminum pistons under the Mooers and Gulick [fol. 1112] patents. Plaintiff says that thereby was created a non-exclusive license, so that the Aluminum Company is neither a proper nor an indispensable party to this proceeding. Defendant says that the license to the Aluminum Company was exclusive, being on everything except pistons made entirely of cast iron or steel, and since this case involves aluminum pistons only, it is in effect an exclusive license as pertains to aluminum pistons.

Defendant likewise claims as to the Schmiedeknecht patent which was acquired at a later date, and defendant contends that the plaintiff's title as to the Jardine and Maynard patents is weaker even than that of the Gulick and Mooers patents. As to Jardine and Maynard, defendant claims the Aluminum Company is more than an exclusive licensee, and that under the decisions the plaintiff did not secure legal title to those patents.

Defendant asserts that in April, 1924, by the assignment, Ex. 38-B, paragraph 22, the Aluminum Company agreed to assign to the Trust Company all its patents or applications relating to pistons which it then owned or should acquire, thus including Jardine and one-half interest in Maynard, yet in the same instrument where it agreed to "assign," the Aluminum Company reserved to itself the exclusive license to make, use and sell aluminum pistons.

There is much argument in the briefs as to whether Aluminum Company of America is an "exclusive" licensee

or a "sole" licensee. It is urged upon the authority of the Six Wheel Corp. v. Sterling Motor Truck Corp., 50 F. (2d) 568 (1931), that The Cleveland Trust Company in this case does not even possess a license to grant licenses, the claim being that its title is less than the title found insufficient by the Court of Appeals of the 9th Circuit in the Six Wheel case. Further, the claim is made by defendants that the plaintiff is not entitled to the recoveries of profits or damages as sought in the Bill and that by failing to join the owner of beneficial interests in the patents plaintiff has lost whatever right it might have to the recovery of profits or damages.

The answer to these contentions is found in Equity Rule 37 which reads in part as follows:

"Every action shall be prosecuted in the name of the real party in interest, but an executor, administrator, guardian, trustee of an express trust, a party with whom or in whose [fol. 1113] name a contract has been made for the benefit of another, or a party expressly authorized by statute, may sue in his own name without joining with him the party for whose benefit the action is brought * * *."

If the testimony shows that The Cleveland Trust Company is trustee of an express trust and holds title to the patents in suit as part of the trust "property" or estate (pts. Ex. 26), under this Equity Rule the trustee would be entitled to maintain this action in its own name without joining with it the party for whose benefit the action is brought, if the facts warrant such a finding.

Examining the record, it appears that the trust estate consists of 4512½ shares, of which the Aluminum Company of America holds 1100 shares (Tr. Perfler, p. 271). Thus is disposed of in this suit at least, the interesting question as to whether or not The Cleveland Trust Company, in bringing these suits, should have joined the owner of the beneficial interests in the patents. However, The Cleveland Trust Company may be suing either as a trustee of an estate or in its own right. Under the Equity Rule "the trustee of an express trust * * * may sue in his own name without joining with him the party for whose benefit the action is brought."

In another case recently heard by the Master, Cleveland Tractor Co. v. International Harvester, Equity No.

3860, a similarly interesting question as to joinder of the licensor and the licensee was raised, and it was there deemed unnecessary to be determined, in view of the other findings in the case. This case presents a different situation because of the trust relationship of the parties, which seems to furnish a sufficient reason for denying defendant's claims that there has been a misjoinder because of failure to make the Aluminum Company of America a party plaintiff.

Venue as to Sterling Products Corporation

Sterling Products Corporation was named as a defendant in each Bill, and on motion was dismissed therefrom, there being no evidence that Sterling Products Corporation entered its appearance or that Sterling Products Corporation controlled the proceedings to the exclusion of any or all of the defendants. Plaintiff sought to secure jurisdiction of Sterling, apparently to obtain a declaratory judgment affecting Sterling. The Master heard the evidence on the question of its appearance in these causes, and finds that there is no appearance, and having no [fol. 1114] power to recommend a declaratory judgment, the evidence on this subject should be expunged from the record as no appearance is made out.

The situation as to Sterling Products Corporation in this case is controlled by the decision in The Cleveland Trust Co. v. Simmons Mfg. Co., et al., Equity No. 3510, where the same question was presented, and his Honor, Judge Jones, held that no decree could be entered against Sterling Products Corporation in the entry of March 11, 1932, which was affirmed by the Court of Appeals of the 6th Circuit in 66 F. (2d) 134, on June 29, 1933.

Claims and Defenses

The first and principal defense is that the pistons made by defendants are in the Public Domain and free and open for the public to use. If this be true, defendants have not infringed any statutory rights of plaintiff. The questions of infringement and validity are interwoven in these suits, notwithstanding plaintiff's effort to keep them separate, and this is true for plaintiff relied upon 5 patents with 51 claims directed at the 7 accused devices of defendants.

Defendants contend that no claim of any of the patents in suit, however broad it may be, can be construed to cover any of the devices; in fact, if any such claim does or can be read upon any of the devices, such claim is invalid as beyond the statutory grant of the patent. Since defendants assert that their pistons are within the Public Domain and they cannot be excluded from making them wholly or partly or selling or using them, our first task is to examine the accused devices.

The evidence offered as to the prior art in this case is to be first considered in examining the disclosures of the several patents. As to the record, there is little dispute as to dates. The controversy is principally as to what the evidence discloses to "any person skilled in the art or science to which it appertains or to which it is most closely connected." The patent statute (R. S. 4888) uses that expression as applying to the required disclosure as a pre-requisite to a patent grant, and the same applies to the sufficiency of any prior patent or printed publication.

The expert witnesses called are Dr. Zay Jeffries, Engineer of The Aluminum Company of America, for plaintiff, and for defendants, Louis M. Stellman, former Engineer of The H. H. Franklin Automobile Company, and [fol. 1115] George P. Dorris of Dorris Motor Company, all of whom are skilled in the art and whose views are entitled to weight.

Particularly is the history of piston development pertinent in considering these patents for plaintiff's claims of invention are for combinations of old elements alleged to perform a useful function for the first time, Expanded Metal v. Bradford, 214 U. S. 366 (1909); and for which plaintiffs claim that it is no answer to such a patent, to say that any or all of the elements are old. Wisconsin v. Hirschy, 28 F. (2d) 838, 841 (8 C. A. 1928).

How this situation as to combinations arises in this case is particularly shown by the plaintiff's claim that the Gulick invention illustrated in the patent employs webs in combination with other parts of the pistons and horizontal and vertical slots; and that flexibility results both in the sections of the thrust face adjacent to the vertical slots and in the webs.

The plain trunk piston as it existed prior to the pistons in suit is first to be considered. From the evidence it appears that the trunk piston is still used, for General

Motors cars use nothing but cast iron trunk pistons and only in trucks use aluminum trunk pistons.

Pistons Charged to Infringe

Defendants' pistons consist of two sets represented by 7 accused devices, viz: Set 1, being Exs. 1, BBB, CCC, 3-J and 3-O, known in this case as the Sterling pistons, and Set 2, being Exs. 8 and 9, known in this case as Ray Day pistons.

Set 1—Sterling Pistons are claimed by defendants to be trunk pistons with the application of such expedients as were long known in the art as applicable to such pistons; that the specific devices had been shown and described in patents and publications prior to the alleged inventions more than two years before the applications of any patent in suit; and which pistons had been abandoned to the public and as to which plaintiff is now estopped to lay any claim against the public generally, including these defendants; of these, defendants further assert that

Exhibit CCC is the ordinary trunk piston with the old wrist pin bosses, internal ribs from head to boss, and with reliefs in old circumferential slots, each extending a little over a quarter around the piston, the head is of reduced diameter, which reduction extends below the lowest [fol. 1116] ring land as was usual and ancient, to permit oil entrance or exit from the cylinder wall of the interior of the piston; and the skirt is split on one side from bottom to top slot, forming a T-slot in one bearing face which was likewise old.

Exhibit BBB differs from CCC only in that the reliefs in the region of the wrist pin bosses are deeper and cut rather than molded therein, and the circumferential slots are cut in a lathe and not sawed, so that the slots are continued past the old internal ribs from the head to the wrist pin bosses.

Exhibit 1 differs from BBB in that the reliefs have been made still deeper, the sides have been dashed-in and made flat, leaving holes at the bottom of the skirt, like happens if a tin can is smashed in; the dashed-in formation produced a stiff piston, being a truss construction with a chord spanning an arc, and when this piston scored, resort was had to what is now known as the "Keystone relief."

Exhibit 3-J differs from CCC in that the circumferential slot is in the lowest ring groove.

Exhibit 3-O differs from 3-J in that relief is secured by the method of making the skirt oval or elliptical, with a long diameter or a major axis at the thrust faces, and with a short diameter or minor axis along the wrist pin bosses; the circumferential slot is in the lower ring groove only on one side and extending a little over one-fourth of the circumference; the vertical slot does not extend to the bottom of the skirt and stops one-third of the way up.

Set 2—Ray Day Pistons are substantially alike except that in Ex. 9 the vertical slot has not been completed but is intended to be by sawing by a mechanic before installation; skirt is supported from the head by lugs, one on each side extending from the head to the boss as shown in the old Chenard & Walcker patent; except that the piston skirt is not described as split; and flexing is not a necessary factor, for in these Ray Day pistons the skirt is strengthened by a series of annular ribs on the inside.

Trunk Pistons and Expedients

The ordinary trunk piston in use for more than thirty years consists of the piston proper carrying the rings and the cross-head combined in one, so as to provide what is [fol. 1117] now called the head and skirt. It has wrist pin bosses projecting from the side walls of the skirt, which are perforated so that a wrist pin may be passed therethrough from which a connecting rod may operate between the bosses. The trunk piston is strengthened interiorly by webs located and formed in various designs. The head carrying the ring grooves was smaller at the ring lands than the skirt, for being the hottest parts, it would expand more than the skirt. The ring grooves receive piston rings now universally split to permit them to expand and contract in order to seal the cylinder, while the skirt itself has a sliding engagement within the cylinder wall.

To this structure of the trunk piston expedients were added before the patents in suit. Relief in the region of the wrist pin bosses was provided for the skirt and this varied in accordance with the conditions encountered or the wish of the designer. The depth of the relief varies from what is necessary in the cast iron piston as shown by the exhibits to the deep relief of the Lynite piston or the ex-

treme relief of the Ferry piston or of the slipper piston of the Ricardo patent.

Relief has also been obtained by "oval grinding," i.e. by grinding the piston skirt oval throughout the entire length, which practice was shown by exhibits and noted by the experts.

Another expedient was to run a groove around the skirt just below the lowest ring land to prevent creeping of the oil upwardly past the piston rings, and this groove was perforated to permit the oil to flow through the piston back into the crank case.

An addition to this last expedient was practiced in the reduction of the diameter of the lower ring land to permit it to wipe the oil down into the groove, thus preventing its passing upwardly into the combustion chamber where it might form carbon. This expedient was shown in the Howe patent and described by Stellman as used by Franklin before any of the patents in suit.

Another expedient, instead of a groove with holes, was the lengthening of the holes to make a more or less continuous slot or slots so that they extended more or less all the way around the skirt. Several prior patents show this, the slot forming a dividing line between the diametrically reduced head and the skirt. In three of the Long patents he reduced the part beneath the lowest ring land to the circumferential slot, and Schoengarth did the same. The circumferential slot isolates the part below the slot from the part [fol. 1118] above the slot, which separation Franquist is partial to—to about 180 degrees, and in others complete through 360 degrees, while in the Ricardo slipper piston the slippers are completely isolated from the head.

The useful function of the slot or insulating gap is to separate the head from the skirt, thus permitting the skirt to run cooler than formerly, and was described as early as 1902 in the Ebbs patent, being repeated in Spillman & Mooers, Chenard & Walcker, and recently in Ricardo. The progressive history of this separation of head from skirt starts with Ebbs 1902, making the connection to the skirt about midway of its length; Spillman & Mooers make the connection at the bottom; Chenard & Walcker through the wrist pin bosses; Franquist at the top by slotting the piston for one-half of the circumference; and Ricardo separating the slippers circumferentially from the head by connecting the webs just below the top of the slipper and at the bottom,

somewhat above the lower termini of the slippers. The three Long patents make the connection in the first like Franquist and in the second and third like Ebbs and Ricardo. Thus the extent of the separation of head from skirt circumferential and the mode of its connection has varied back and forth from 1902 to 1919.

While the skirt slides in the cylinder, the problem is to conduct the heat from the head, which depends upon the connection or isolation of the head and skirt, and the skirt is subject to expansion. No problem was involved in the use of a cast iron piston since there was no difference in the co-efficients of expansion. With the introduction of aluminum pistons with the high co-efficient of aluminum as compared with cast iron, it was either necessary to allow such clearance as to result in extreme looseness and piston slap when the engine was cold, or split the piston as was done with the piston ring. The difficulty was met in the same way as in piston rings which, when subjected to heat, must still maintain their spring engagement and this was accomplished by wholly or partially cutting through the skirt wall.

Defendants contend that the entire problem was met in the Franquist patent, although the same result is claimed to be shown by the split skirts of Ebbs, Van Bever, Rainforth and Serex. Splitting of the skirt became so common that the Patent Office took the position that this was not invention in any particular piston, and refused a patent therefor (Law Examiner's Decision, Exs. 4-C to 4-F). An- [fol. 1119] other expedient in cast iron pistons particularly, was to lighten the skirt which was accomplished in several ways, as cutting holes in the skirt or even cutting out a part of the skirt in the region of the wrist pin bosses. The experts noted this practice shown in Spillman & Mooers, Ferry and slipper pistons of White and Ricardo, where the slipper is perforated and even the sides of the skirt cut away.

Defendants contend that these expedients were natural developments within the skill of the calling, and were actually in practice before the advent of the devices of the patents in suit, and the further claim of the defendants is that in the accused devices and even in the structure shown in the patents in suit there is merely an incorporation, more or less, of such expedients in a single trunk piston; and that each expedient performs the same function as it did before the natural production of a better piston. Defendants rely

upon such rule followed by the courts, as to a stove in Thatcher Heating Co. v. Burtis, 121 U. S. 286 (1887); a heating stove in Hailes v. Van Wormer, 20 Wall. 353 (1873); storage case of Office Specialty Mfg. Co. v. Fenton, 174 U. S. 492 (1899); and the concrete mixing and conveying device in Powers-Kennedy v. Concrete Co., 282 U. S. 175 (1930).

The Expired Franquist Patent

The Franquist patent is relied upon by defendants, who claim Franquist gathered everything of the prior art which his claims describe in combination. The specification of this patent is brief, less than two pages, and seems to be the clearest description of conditions encountered, fundamental means to meet those conditions, operation and result, of the many patents and printed publications before the court. Its brevity and conciseness stand out in contrast with the voluminous specifications of the patents in suit and the professional dissertations of experts.

Defendants claim that the Franquist specification aptly describes the conditions, fundamental means to meet those conditions, operation and result of the Sterling pistons, and that all the patents (except Schmiedeknecht) illustrate the specific Franquist embodiment, so that there is no infringement. The clarity of the Franquist patent No. 1,153,902 is seen in the clauses as to objects and purposes, p. 1, lines 9-25:

[fol. 1120] "This invention relates to internal combustion engines and has for its primary object the provision of a piston which will eliminate the piston clatter at all speeds and temperatures of the motor.

"With this object in view, the invention consists of a piston having a sleeve which is circumferentially compressible and is adapted to have a snug sliding fit in the cylinder when cold, so that upon an expansion of the piston its sleeve will automatically yield sufficiently to prevent the piston from sticking in the cylinder, and after the cylinder has also expanded will again automatically resume substantially its normal size and take up the free play between the cylinder and piston, which would otherwise occur."

Defendants claim that this language clearly defines the objects and purposes of Sterling pistons and Ray Day pistons, and that in the view of plaintiff's expert it is also

true of the Gulick, Jardine and Maynard patents. In the Franquist patent the word "sleeve" is used instead of skirt, to apply to the same part. While brief, the defendant contends the claims of the Franquist patent are fundamental, that they read upon and comprehend all of the accused devices, and that this plaintiff has so heretofore contended as to Ex. 1 in the Simmons case.

Plaintiff relied upon the Franquist patent in the Simmons case, having acquired title thereto on May 16, 1924, when the patent still had some eight years to run. Plaintiff thereafter included the Franquist patent in licenses, Ex. 39-C, List A, and royalties were collected from the various licensees under this Franquist patent.

The piston in question in the Simmons case was a duplicate of Ex. 1 in this case, and it was there claimed to infringe Franquist and other patents in the Simmons case. The Gulick patent issued July 21, 1931, and the interlocutory decree in the Simmons case was entered September 25, 1931, decreeing the validity of the Franquist patent and infringement by duplicate of Ex. 1 in this case, and thereafter followed the injunction on November 5, 1931.

The testimony of plaintiff's expert as to the Franquist piston and its value developed an interesting situation. Dr. Jeffries said, Tr. 207, that he tested the Franquist model piston and discovered it worked no differently than Ex. 1 without a slot, and was a trunk piston. This discovery by [fol. 1121] test the Doctor made the day before the decree in the Simmons case was entered, but he did not report this fact to counsel who at the same time were attempting to extend the order of injunction (including Franquist) to Sterling. This effort to include Sterling in that case was denied by the District Court and affirmed in the Court of Appeals. Thus, within two months after the new patent issues to Gulick, notwithstanding a suit is filed charging infringement of Franquist, an order of injunction entered, the expert (and plaintiff must be charged with such knowledge) suddenly discovers that the Franquist patent was nothing at all, although it had been a basis of the decree in the Simmons case.

Defendants urge that comparison of the Franquist and the Sterling pistons shows identity of structure, function and mode of operation. The claim is that Ex. CCC is only different from Franquist in that there is one slot; that the circumferential slot of Franquist is in the lowest ring

groove, while in Ex. CCC it is just below the lowest ring land, but there is no distinction in this because in Ex. 3-J and Ex. 3-O the slots are located as in Franquist.

Ex. 3-J has the circumferential slotting in the lowest ring groove and in addition has a Keystone relief in the thrust faces forming the so-called Keystone relief not involved in this case, of which more will be said at another place. Ex. 3-O has a circumferential slot in the ring groove; the vertical slot is not completed but terminates one-third of the way from the top of the piston, like Franquist in this respect and having equivalent reliefs extending the full length of the skirt in the region of the wrist pin bosses.

The contention of defendants is that the Sterling pistons approach so closely to Franquist in fundamentals that even in details there is no difference. Whatever difference there is resides in expedients old in the art; the only new thing added being the Keystone relief which is not involved here, and the sole distinction being that instead of one vertical slot, there are four slots or gutters in Franquist.

As to mode of operation, defendants say the Sterling piston is the same as the Franquist, each having a head separated from the skirt in the region of the thrust faces by circumferential slots defining the line of division between a diametrically reduced head, relief in the region of the wrist [fol. 1122] pin bosses which, upon heating the reliefs compensate for expansion, and with slots closing to compensate for the expansion. Notwithstanding the grant of the Franquist patent, whether expired or unexpired, having all presumptions of validity in its favor, plaintiff's expert asserts that Franquist is an ordinary trunk piston lacking flexibility to function different from a trunk piston, and this in spite of the fact that the specification says that the structure is flexible.

Plaintiff points out that Franquist employs four gutters where the patents in suit and the accused devices employ only one slot. Question then arises whether the gutters permit the expansion and contraction of the skirt as does the slotting of the skirt. While Franquist causes contraction of his piston by what he calls circumferential compression, plaintiff claims that this is not sufficient for successful operation of the Franquist piston, although the testimony lacks the evidence of any motor tests establishing this contention. The application of a can opener device (defendants' Ex. 3-I) showed that by pressure of the hand the gutters

would be closed sufficiently to hold a coin, which would drop out when the hand pressure was released.

Notwithstanding the pendency of the Simmons suit, the expert testified (Tr. 205) that "the Franquist piston principle so far as I know is not used at all in pistons at the present time," and (Tr. 204) that "the construction of the Maynard piston is different from that of Franquist, its mode of operation is different and its result is different," and this testimony is given at the same time that plaintiff and witness Jeffries claimed that Ex. 1 and also Exs. BBB and CCC employed the Maynard principle. Such contention is at variance with the position taken by plaintiff and those through whom plaintiff claims. By reason thereof, defendants contend that plaintiff is not only estopped by taking these positions against these defendants, but is wholly estopped from questioning the utility of the Franquist piston or that it embodies the structure, function and mode of operation of Ex. 1, as well as of the other accused devices.

Estoppel of Plaintiff to Deny Utility of Franquist

Defendants urge that since plaintiff has used the Franquist patent as a basis for this trustee to keep licensees in the fold, and is disowned as it expires, that thereby arises [fol. 1123] an equitable estoppel. Having abandoned the expired patent, the plaintiff now seeks to perpetuate its monopoly, relying upon another, the newly issued Gulick patent. Defendants urge that if there is no estoppel, then a third patent might issue after the fourteen years had elapsed, replace Gulick, and the monopoly thus be perpetuated indefinitely. As an answer to such practice defendants urge an equitable estoppel in favor of defendants, a presumption of operativeness and utility of a patent structure conclusive against plaintiff, and that the question is one of utility.

A case in point of like "quite unusual circumstances" is Dalton Adding Mach. Co. v. Rockford Milling Mach. Co., 253 Fed. 189 (D. C. Ill., 1918), where plaintiff owned the Helmick patent set up in defense, and marketed machines under that patent, and the court said:

"The plaintiffs thereby held out the patent to the public as a valid patent, and gave warning to the public and to any possible competitors that they asserted and claimed a monopoly under that patent."

In that case plaintiff brought suit against another for infringement of the Helmick patent, and on issue of the Hopkins patent involved in the then pending case, the suit on the Helmick patent was voluntarily dismissed. Judge Sanborn further said that the facts did not, strictly speaking, there create an equitable estoppel in favor of defendants, since they were not in the same business and were not misled by plaintiff's acts, yet the facts did strengthen the presumption of inoperativeness, placing the plaintiff in inconsistent positions.

In the case at bar, not only are the parties in the same business, but plaintiff was prosecuting the Simmons suit, including its claims on Franquist, at the time of the trial in this case. An authority relied upon in the Dalton case, supra, Rice-Stix Dry Goods Co. v. Scriven Co., 165 Fed. 639 (C. C. A. 8, 1908), was where plaintiff had sold a structure covered by a Brown patent under trademark and contended the trademark had not expired because the patent was invalid. Judge Hunger says, p. 645:

"* * * Having derived, through the assertion of the validity of the Brown patent, all the advantages incident to the possession of a valid patent, it will not now be heard to assert the contrary, as a means of escaping consequences arising upon the termination of the monopoly secured through the patent. This is based upon the well-recognized rule that:

[fol. 1124] 'Equity will refuse to aid a complainant in cases of this character, who is himself guilty of making material false statements in connection with the property he seeks to protect.' Hilson v. Foster, 80 Fed. 896."

And further, p. 646:

"It matters not that complainant may have supposed the Brown patent to have been a valid one."

Presumption of Operativeness

With the grant of a patent as provided in Revised Statutes 4886, there arises a presumption not only that the patent is valid, but that its structure is practically operative. Otherwise, the grant of a patent by the government would be a vain thing, and there is the further presump-

tion that the expert examiners in the Patent Office have examined the structure for operativeness. Such rule applies to a patent in suit and also to any prior patent advanced as a reference in an infringement suit. Such was the view of Mr. Justice Roberts in Powers-Kennedy Co. v. Concrete Co., 282 U. S. 175 (1930), when he said, p. 184:

"Methods and apparatus for moving concrete by compressed air had been previously invented. See Smith's patent, 122,498. The court below, in No. 3, indicated that this had not been found practicable. There is no support in the record for any such finding and against it stands the presumption of operability from its patenting."

To the same effect is Dashiell v. Grosvenor, 162 U. S. 425 (1896) and Dalton v. Rockford, supra.

In view of this presumption, the burden of overcoming it rests upon plaintiff.

Utility—Operativeness

The rule is that a patent structure is not to be considered by its standing alone, but in the light of the art as it existed at the time of the advent of the patent in suit. If the law were otherwise, then one could only copy in detail what is known and described in the prior patent without using "the skill of the calling" at the time of the advent of the patent in suit. Thus, to determine the operativeness of a patent structure, a skilled mechanic can take the disclosure and [fol. 1125] supplement it by what he knows. Walker on Patents, 6th Ed., p. 147, states the rule:

"If, however, an invention performs a good function, though but imperfectly, its utility is not negatived by the fact that it is susceptible of improvement, which will make it operate much better, nor by the fact that some prior invention performed the same function quite as well, or even performed it with superior excellence. Nor is utility negatived by later inventions which are so much superior to the patented process or thing, that they entirely superseded the use of the latter. Indeed, patents are never held to be void for want of utility, merely because the things covered by them perform their functions but poorly."

A leading case on this is the Bell Telephone case, 126 U. S. 1 (1888), where the patent was attacked because it was

alleged to be inoperative, and Mr. Chief Justice Waite comments on this, p. 536.

The operativeness of an anticipating device, which was disclosed in an engineering publication, and concededly not being commercially practicable, yet it did not lack invention, was held in Sparks-Withington Co. v. Jay, 270 Fed. 449 (C. C. A. 6, 1921), where Judge Knappen affirmed Judge Westenhaver of this District, and said at p. 452:

"We think the Tice device, as disclosed by him, cannot be pronounced inoperative in a patentable sense, although under many conditions likely to be met it would fail to function, and thus could not be successful commercially. But, testing the disclosure as we think we should by the rules applicable to a patent, the device, as described, did not lack invention merely because the inventor did not successfully bring his art to the highest degree of perfection, nor because, without changes in or additions thereto, it could not be successful commercially."

To the same effect in Universal Rim Co. v. Firestone Steel Products Co., 289 Fed. 884 (1923), opinion also by Judge Westenhaver, and Sun Ray Gas Corporation v. Bellows-Claude Neon Co., 49 Fed. (2) 886 (C. C. A. 6, 1931), where the contention was made that the Neon tube of the patent did not have a life of 1,000 hours as was required in order to make the structure commercially feasible, and [fol. 1126] of this, Judge Hickenlooper said, p. 889:

"Conceding that present day competitive conditions require a life of 1,000 hours, that Claude contemplated the use of say 2 mm. pressure, that at this pressure the life of the tube would be much less than 1,000 hours, and that the present great commercial utility of neon tubes is due almost exclusively to the later discovery by some one of the advantages of using pressures as high as 15 mm., or even 20 mm., the argument still falls far short of establishing invalidity. The invention of Claude was the primary one on which all subsequent developments were founded. The test is not that of commercial utility, but rather of operative utility and the forward step."

Plaintiff's answer to this contention is that the Franquist patent was never used commercially, and that the effort to use it commercially failed because it was no better than the

trunk type piston so far as commercial flexing was concerned. This is met by the decision of Judge Knappen in Sparks-Withington Co. v. Jay, supra, for the argument was there made that by actual test the device was shown to be inoperative and useless. Judge Knappen goes on to point out in the quotation, supra, that a device cannot be pronounced inoperative in a patentable sense, although under many conditions it would fail to function, or could not be used successfully commercially.

Plaintiff also relies on a rule that "broad and less broad claims in patents owned by the same party are infringed by the same structure," citing Byers Mach. Co. v. Keystone Driller, 44 F. (2d) 283 (C. C. A. 6, 1930). From the first Syllabus and reading of this case it appears to have concerned a basic patent, and "if valid, it is entitled to a breadth of construction permitted to pioneers in any art." Admittedly, the patents relied upon by plaintiff are not pioneer patents, which clearly distinguishes the situations.

The burden of overcoming the presumption rests upon plaintiff, and plaintiff offers no convincing test of the inoperativeness of Franquist.

Plaintiff is estopped to deny that Franquist advanced the art and to deny that Franquist discloses an operative piston which will automatically yield sufficiently to prevent the piston from sticking in the cylinder while hot and slap-[fol. 1127] ping when cold, and is further estopped to deny that Ex. 1 has the essential structure, function and mode of operation described in the Franquist patent, which likewise applies to Sterling pistons, Exs. BBB, CCC, 3-J and 3-O. Holding otherwise would permit the plaintiff to shift its position as its interest required, which is not permitted in a court of equity; to which may be added that plaintiff has not overcome the presumption of operativeness, utility and practicability of the Franquist patent raised by the grant of the patent.

In this connection defendants also urge that there is a misunderstanding as to the function of vertical slotting, that is to say, that the vertical slot in Ex. 1 does not make the skirt of the piston flexible at the top. The same claim is made for the other Sterling pistons. Defendants assert that a structure such as Ex. 1 has a skirt which is not flexible at the top, with its dashed-in walls attached to the head by additional ribs, both inside and out. Defendants claim the compensation results from the use of the Keystone re-

lief which is demonstrated in the action of the forces by the vectors, as shown in Defendants' Ex. 4-A.

The claim is that in the Sterling pistons the skirt is tied to the head at the top, and expansion must be and is compensated for by the reliefs in the region of the wrist pin bosses which have to be carried into the thrust faces at the top. Defendants' claim is that such Keystone relief only made the Maynard piston workable, of which more later. Finally, defendants urge that the Sterling pistons act at the top like the plain trunk pistons with slots, as in the prior art, providing flexibility at the bottom with compensation at the top by the Keystone reliefs. In this it is urged that the Sterling pistons cannot be distinguished from the Franquist which they follow so closely in structure, function and mode of operation. If this be true, then defendants have not invaded the domain of plaintiff's patents, and equitable relief under the statute should be denied.

Abandonment by Gulick of Features in Sterling Pistons Claimed to Infringe

The defenses of abandonment and public use were raised by the answers, and came into the case with plaintiff's position that the 1911 and 1914 pistons were within the Gulick patent (Tr. p. 935).

Early in the testimony of inventor Gulick it appeared that he made pistons in 1911 and 1914, represented by [fol. 1128] Exs. 48 and 51. Upon defendants' insistence that plaintiff should state what Gulick patent claims covered these early pistons, before the case was closed, plaintiff's counsel enumerated certain claims which the two early Gulick pistons showed as exemplifying claims of the Gulick patent, which claims were also infringed by the various Sterling pistons.

This presents a question whether the subject-matter involved in the 1911 and 1914 pistons was abandoned to the public by the plaintiff or its privies in title prior to the earliest applications of the patents in suit. If abandoned, those pistons are in the public domain and defendants have not infringed the statutory rights of plaintiff by manufacture, wholly or in part, and by sale of any pistons corresponding to those abandoned or deviating therefrom in matters involving merely mechanical skill, which in this case are the obvious expedients of the piston art.

The statutory requirements on the subject of patents pertinent here are R. S. 4886, 4920:

"Any person who has invented * * * any new and useful * * * machine, * * * unless the same is proved to have been abandoned, may * * * obtain a patent therefor * * *.

In any action for infringement the defendant * * * may prove on trial * * * (5) that it had been in public use or on sale in this country for more than two years before his application for a patent, or had been abandoned to the public."

These requirements both as to prior use and abandonment must be considered in the light of the facts in the case at bar. There are two different issues, one, a statutory bar, and the other, at large on facts to be established; but plainly the latter may be made out on proof directed to what occurred either before or after the bar had fallen.

Plaintiff states that the Sterling pistons infringe from 5 to 9 claims of the Gulick patent embodied in these 1911 and 1914 pistons, so that with the facts which developed at the trial, the issue is made as to whether Gulick abandoned his invention. Gulick testifies that in 1908 he conceived a piston like Ex. 51, the 1914 piston, but he did nothing except make sketches until May, 1911. The 1911 piston (Ex. 48), the head of which Gulick states was diametrically reduced to the slot, was tested out in May, 1911, by the use of a set of such pistons in a motorcycle; they were also [fol. 1129] given a block test of 4,000 revolutions per minute, and while one broke at the pin boss, there was no seizure; that test established the flexibility of the piston.

In July a set of such pistons were placed in an Excelsior motor and run for 24 hours; the engine containing these pistons was then placed in a Renault car and driven to the Elgin road races in August, and found satisfactory. In his Preliminary Statement in Interference No. 49,569 (Defendants' Exs. 5F-1 and 5F-2), as to whether the test was a reduction to practice and whether Gulick was satisfied, he says:

"that on or about the 25th day of August, 1911," (date of Elgin road races) "he first explained the invention to others; that he first embodies his invention in a full sized engine, which was completed about the 25th day of August,

1911; and that on the said 25th day of August, 1911, the said engine was first successfully operated, at the City of Chicago, County of Cook, in the State of Illinois."

The run to Elgin was 150 miles round trip, and the Renault car was driven until November 1, 1911, over 3,000 miles for personal and company business, operating to his satisfaction, and except for mechanical repairs the pistons were in perfect condition on November 1st, when they were removed from the car, the car sold with other pistons in it, and pistons like Ex. 48 were scrapped.

No original drawing of these pistons has been preserved, the only drawing being that of the Gulick original sketch (Ex. 36), and his detail drawing, both showing the detail construction of the application. In the meantime he had taken his piston drawings to various patent attorneys, and took out applications for other patents. Apparently he was so well satisfied with the 1911 test that when he made the Ex. 51, the 1914 piston, it was at once placed in his own Amplex car which was driven anywhere from 2,500 to 5,300 miles from July 16th to November 11th, the car being used for general purposes by him and for the company with which he was then connected. He testified that the pistons gave perfect satisfaction, and on November 11, 1914, were removed from the car at the Amplex plant and later sold with other junk when the plant was sold in receivership.

No sketch of the 1914 piston has been preserved except we have the piston construction of the application which Gulick says was his idea of the proper design. Gulick did [fol. 1130] nothing with his piston until in August, 1917, when it was turned over to the Packard Motor Car Company with other so-called inventions for which he had given an option to Packard in March, 1916. Packard did nothing with this piston until an application was filed November 30, 1917, although Packard had taken out many other applications since acquiring the option in March of the previous year.

Defendants contend that the 1911 and 1914 pistons were thoroughly abandoned. There is no evidence to corroborate Gulick of any communication to the Packard counsel, Tibbetts, about these 1911 and 1914 pistons. The 1911 and 1914 pistons do not appear in his application, which illustrates and describes only the web piston of the Gulick 1911 sketch and the 1914 drawing, and there is no other evidence

that they ever were tried out or had any commercial history. The 1911 and 1914 pistons do not even appear in his affidavit of December 2, 1921 (Ex. 4-L, p. 1859-1860), but again what appears is the drawing of the application construction (Ex. 32), and the affidavit states, referring to the blueprint like Ex. 32:

"that a photoprint of such blue print is attached hereto; that the longhand notes on said blue print which show in the photoprint were made by him on the blue print prior to the month of October 1915; that said invention was incorporated in an automobile engine and successfully operated in the United States prior to the month of October 1915."

There is no evidence that such a piston was ever made, let alone tested; and the date of October, 1915, carries back of the filing date of the Schoengarth patent. Any help in the way of correspondence between parties that could be obtained as to the relations between Gulick, the inventor, and the Packard Company, his assignee, the Packard Company a beneficiary of this plaintiff trust, was denied as counsel stood upon their rights as to privileged communications.

The 1914 piston first comes to light on November 8, 1922, when Gulick made the sketch (Ex. 33) bearing that date at Cleveland, in preparation of the Interference. He says he did not tell anyone about the 1911 piston "because he was not asked."

In this situation the following statement in the recent Teapot Dome case, 275 U. S. 13 (1927), by Mr. Justice Butler, is quite in point, and this authority was again cited [fol. 1131] by Mr. Justice Cardozo in Cooper v. Dasher, 54 Sup. Ct. Repr. of November 15, 1933, at p. 7:

"Familiar rules govern the consideration of the evidence. As said by Lord Mansfield in Blatch v. Archer, Cowper 63, 65: 'It is certainly a maxim that all evidence is to be weighed according to the proof which it was in the power of one side to have produced, and in the power of the other to have contradicted.' "

Considering Gulick's testimony as to differences between the 1911 piston and the 1914 piston, his personal views appeared as to what design will satisfy the engineer, overlooking the fact that in 1914 he merely re-designed the 1911 piston for aluminum use, put in two webs instead of one,

ran the horizontal slot all the way around, and made the vertical slot nearly straight.

Gulick's activities and the chronological history of the discovery of his device and of his piston patent extending over twenty-three years are unique:

1908: Conception like Ex. 51, the 1914 piston (Tr. p. 742).

1911: May, Motorcycle piston given block test and Gulick was thoroughly satisfied with it (Tr. p. 733); July, Excelsior automobile piston given a block test, to the full satisfaction of Gulick (Tr. pp. 745-6), and Excelsior motor with pistons like Ex. 48 given a run-in test (Tr. p. 707); August, Engine with the run-in pistons placed in Renault car and given a road test to Elgin, for 150 miles; ran perfectly to Gulick's satisfaction; which was the reduction to practice alleged in his Preliminary Statement (Tr. p. 815); November, after use of these pistons in the Renault car for the difference between 2500 to 4000 miles and 150 miles, using the car for personal use and for company business (Tr. p. 732), the pistons were allowed to go to the scrap heap.

1914: May, aluminum piston drawings made and ordered; July, aluminum piston made, not given a block test; had in his personal car and run for over 5,000 miles; thereafter, pistons were let go to the scrap heap (Tr. pp. 734, 739-42).

1916: March, Gulick gives option on piston to Packard with other devices.

1917: August, assignment to Packard Motor executed and November 30th patent application filed.

1922: September 12th, amending application filed broadening claims and introducing flexibility; and on November 8th made sketch Ex. 33 of 1914 piston.

[fol. 1132] 1922-1931: Interference proceedings with Long, Hartog and others.

1931: April, further amendments and patent issued July 21st.

The testimony of Gulick first given at this trial showed that the pistons of 1911 and 1914, as to fitting and results, ran perfectly (Tr. p. 708), and apparently a clear case of actual and statutory abandonment was made out not only for 1911 use but repeated in 1914. After recess, upon the following day witness Gulick showed a surprising knowledge of experimental use, and his testimony became an about face and an argument that the 1914 pistons were

nothing but an experimental use as contemplated by the law; and he sought to limit his previous testimony by saying that the pistons "only operated satisfactorily as far as the split skirt idea was concerned," (Tr. pp. 755-6).

The question presented is one of abandonment, i. e. at large or statutory, both of which are covered by the statute R. S. 4886. Walker on Patents, 6th Ed., Vol. 1, in Chapter VII, under the general subject, discusses statutory abandonment as constructive abandonment. The policy of the law was early laid down by Mr. Justice Storey in Pennock & Sellers v. Dialogue, 2 Peters, 27 U. S. 1 (1929), where the court considers the then patent statute from the standpoint of abandonment, and says, p. 16:

"It has not been, and indeed cannot be denied, that an inventor may abandon his invention, and surrender or dedicate it to the public. This inchoate right, thus once gone, cannot afterwards be resumed at his pleasure; for, where gifts are once made to the public in this way, they become absolute. Thus, if a man dedicates a way, or other easement to the public, it is supposed to carry with it a permanent right of user."

Courts approve a reasonable delay in the filing of an application when the completion of the invention and the testing of its values "by a series of sufficient and practical experiments is necessary," Kendall v. Winsor, 21 How. 322 (1859), and that abandonment may show "either by express declaration or by conduct equally significant with language." The rule is stated in Pitts v. Hall, 2 Blatchf. 235, by Mr. Justice Nelson, that the patentee may forfeit his right "if he use it publicly himself in the ordinary [fol. 1133] way of a public use of a machine at any time prior to two years before he makes his application for a patent."

The leading case is Consolidated Fruit Jar Co. v. Wright, 94 U. S. 92 (1876), which cites this rule, where was involved the defense of abandonment as well as *private* or public use and sale. After having made about two dozen fruit jars, Mason left one of them with the manufacturer and never called for it, so that it was sold at auction, and this neglect for some eight years "is full of significance and has an important bearing upon the question of abandonment;" and Mr. Justice Swayne said, p. 96:

"It is enough to say, without recapitulating the facts, that in our judgment the defence of abandonment to the public is also clearly made out * * *. Inventors are a meritorious class. They are public benefactors. They add to the wealth and comfort of the community, and promote the progress of civilization. A patent for an invention is as much property as a patent for land. The right rests on the same foundation, and is surrounded and protected by the same sanctions. There is a like larger domain held in ownership by the public. Neither an individual nor the public can trench upon or appropriate what belongs to the other. The inventor must comply with the conditions prescribed by the law. If he fails to do this he acquires no title, and his invention or discovery, no matter what it may be, is lost to him, and is henceforward no more his than if he had never been in any wise connected with it. It is made, thereupon, as it were by accretion, irrevocably a part of the domain which belongs to the community at large. The invention here in question is within this category."

The case most relied upon by plaintiff to negative abandonment is Elizabeth v. Pavement Co., 97 U. S. 126 (1877), where the court says, p. 134:

"An abandonment of an invention to the public may be evinced by the conduct of the inventor at any time, even within the two years named in the law. The effect of the law is, that no such consequence will necessarily follow from the invention being in public use or on sale, with the inventor's consent and allowance, at any time within two [fol. 1134] years before his application; but that, if the invention is in public use or on sale prior to that time, it will be conclusive evidence of abandonment, and the patent will be void."

An inventor was testing the durability of his pavement over a period of years, and it was held that this was not a public use so long as the inventor was engaged in good faith in testing its operation. There the pavement was laid on a toll road, much used by traffic, and the inventor delayed filing, examining it daily, and while he did not find changes were necessary, the court said "yet he may justly be said to be using his machine only by way of experiment."

Light on this question of abandonment is to be had in

the two cases of Macbeth-Evans Glass Co. v. General Electric Co., 231 Fed. 183 (this District, 1916), which was a case involving the secret use of a process before applying for a patent thereon. The decision below was by the late Justice Clarke, and was affirmed in 246 Fed. 695 (C. C. A. 6, 1917), Judge Warrington writing the opinion. The court points out that the question of abandonment is one of fact and one of relinquishment of a right to a patent, and considers the situation analogous to what is involved here, where instead of continuing the practice of the invention in secret, the subjectmatter thereof "is cast away or destroyed." The court considered the failure of the patent statutes to prescribe a period within which a patent must be applied for. In that case the inventor of a process for making glass used it in secret for nearly 10 years, selling the product. At the end of that time, when the secret was betrayed by an employee, the inventor applied for a patent and the court held that the policy of the patent law to secure the full benefit of inventions would be defeated if an inventor could withhold his invention from the public for an indefinite time, for his own profit, keep it a trade secret, and then have the right to secure protection under the patent laws. The reasoning of the Court of Appeals of the 6th Circuit was approved by Mr. Chief Justice Taft in Woodbridge v. United States, 263 U. S. 50 (1923), to the effect that the purpose and the result of the conduct of the inventor was unduly to postpone the time when the public could enjoy the free use of the invention. In this last case the Chief Justice spoke of the unconscionable postponement of the end of the inventor's monopoly (there 10 [fol. 1135] years) as the result of the inventor's "deliberate design."

Almost the identical situation as is here arose in Allinson Mfg. Co. v. Ideal Filter Co., 21 F. (2d) 22 (C. C. A. 8, 1927). Allinson reduced his gasoline filter (for dry cleaning) to practice in July, 1914, and continued its use until December, 1916, then he dismantled the apparatus, sold it, and went into another business. Later he went back into the cleaning business but did not use his filter, and after seeing another filter about three years later, somewhat in general aspects the same although not an infringement of the subsequently issued Allinson patent, he filed his ap-

plication for the patent in suit. His use was entirely in secret and in his own business, the filter being made out of an old still, so that it was not a commercial device, and the court held this to be an abandonment, relying upon the Macbeth-Evans case, supra, saying that upon the facts it clearly constituted a public use within the purpose and meaning of the statute. Judge Lewis said, p. 26:

"Assuming, however, that he had an intention at any time to apply for patent, which was not proven, the conclusion cannot be avoided that he wilfully and negligently postponed his application, and that, too, until after others had become engaged, to his knowledge, in efforts to discover and put in use a machine for clarifying gasoline for clothes cleaning purposes." * * *

"In the light of the record we think he abandoned his rights when he dismantled his machine in 1916, went into the moving picture business and manifested no further interest in his invention until he saw Le Vora's machine in February, 1920."

* * * "We think it immaterial whether Allinson's inaction and lack of interest be defined as abandonment, willful negligence or cause for forfeiture. It was conduct in direct opposition to the purpose and policy of the law under which he might have acquired rights had he been diligent."

As in the Macbeth-Evans case, supra, the equitable rule of election applies. Gulick tested the 1911 piston, used it in his car for 3,000 miles, then scrapped it. He permitted the same thing to be done with his 1914 piston, retaining not even a sketch or sample of that piston. When selling [fol. 1136] to Packard he did not tell Tibbetts about it and said nothing about the 1911 and 1914 pistons in his application, and did not even raise the question in his supplemental oath of December 2, 1921, but first tells of it on November 2, 1922, thus establishing a situation where the rule of election applies to make a case of abandonment. Packard was bound by Gulick's acts by its own failure, after acquiring the Gulick rights, to make any application before November 30, 1917, and of course plaintiffs are bound by the acts of Gulick and Packard, Comptograph Co. v. Adder Machine Co., 41 App. D. C. 427.

Statutory Abandonment

The fact that a device is not used continuously for two years does not take it out of the statute, the Supreme Court having construed the patent statute as if the word "for" had been omitted, Consolidated Fruit Jar Co. v. Wright, supra. A patent is void because of a public use more than two years before the application, even though the device had been used only on a few occasions or for a short period of time, Thomson v. Lorain Steel Co., 117 Fed. 249 (1902); LeRoy v. Nicholas Power Co., 244 Fed. 955 (D. C. N. Y., 1917). There was no concealment of the pistons, for as to the use in the Renault car, Gulick testified that the 1911 Renault car was "used the same as any other car;" and the 1914 Amplex with his aluminum pistons was used for both company and personal business (Tr. pp. 732-737), and people in the shop saw them, so that no such circumstances there are a public use, Smith & Griggs Mfg. Co. v. Sprague, 123 U. S. 249 (1887), where Mr. Justice Mathews says, at p. 254:

"It was a public use in the sense of the statute and within the decisions of this court, inasmuch as it was used by the complainant in the regular conduct of his business by workmen employed by him in its operation, and in the view of such part of the public as chose to resort to his establishment."

That the pistons when in actual operation were inside the cylinders and concealed from view, does not take such use out of the statute, Hall v. MacNeale, 107 U. S. 90 (1882). After the recess Gulick was not so sure that his pistons of 1911 and 1914 were perfectly satisfactory, and on the question that his activities were only what is known to the patent law as an experimental use, the decision in [fol. 1137] Eastman v. Mayor, 134 Fed. 844 (C. C. A. 2, 1904), contains a complete discussion of this subject by Judge Coxe on p. 857-9, with the court's summary of the law:

"From these authorities we deduce the following propositions, as applicable to the present controversy:

"First. An inventor has a reasonable time in which to experiment for the purpose of perfecting the invention and demonstrating its utility.

"Second. The time thus spent, if in good faith, is no part of the two-year statute of limitations.

"Third. The experiments must be made in perfecting the invention as described and shown.

"Fourth. Experiments made in testing parts of the machine not covered by the invention will not have the effect of extending the two-year period.

"Fifth. As soon as the invention is completed, viz.: 'in such a condition that the inventor can apply for a patent for it,' the two-year period begins to run and the application must be made within this period.

"Sixth. The fact that the invention has been improved since its original embodiment does not demonstrate that it was then embryonic or incomplete.

"Seventh. When a clear case of prior public use is established the burden is on the inventor to prove by convincing proof that the use was experimental.

This rule has been followed in this Circuit in Jenner v. Bowen, 139 Fed. 556 (1905), where Judge, later Mr. Justice Lurton, referred to Judge Coxe's decision as fully considered and the cases all examined. This later case was followed by Judge Denison in Austin Machinery Co. v. Buckeye Traction Ditcher Co., 13 F. (2d) 697 (C. C. A. 6, 1926), and by Judge Westenhaver in Kerner Incinerator Co. v. Townsend Estates, Inc., 27 F. (2d) 599 (N. D. Ohio, 1926). The use does not escape the statute unless the experimental use is limited to such use as is necessary to determine the ability of the device to perform the function for which it is designed. The inventor is entitled to use or test the device during its development, to an extent to determine its utility or ability to fulfill the function for which it is intended. When the purposes of the test are fulfilled and success indicated, then the period of experi-[fol. 1138] mental use ends, and the statutory 2-year period begins.

The splitting of the piston having proved successful in 1911 could not be made the subject of additional experimental use in 1914, and thereafter be patented as in the Gulick patent without reference to the modification (aluminum) which was made in 1914. The defendants having made a case of public use, whether by the patentee or

another, the burden is then upon the patentee to show, if he can, that the public use was an experimental one. This the plaintiff has failed to do, notwithstanding the belated assertion of inventor Gulick that his 1911 and 1914 uses were experimental only, that being only his descriptive term and does not constitute this an exception to the public use described by the statute. The use may be public although concealed by the nature of the invention itself, as in the corset case, Egbert v. Lipman, 104 U. S. 333 (1888).

Plaintiff relies upon International Telephone v. Kellogg, 171 Fed. 651 (C. C. A. 7, 1909), where Dean had perfected a telephone transmitter and had used it only for determining its efficiency, and this was held to not be a public use, there being no abandonment; also upon Reo Motor Car v. Gear Grinding, 42 F. (2d) 965 (C. C. A. 6, 1930), where there is also an attempt to carry the date back, the inventor was met with a claim of public use, but in this case, as Judge Denison points out at p. 969, the use during all the period was public enough and was in connection with the current sales of the product, but the embodiment of all steps of the combination was not completed and the court concluded that it did not clearly and satisfactorily appear that the effected and completed method was in public use; and also in Kerner Incinerator Co. v. Townsend, supra, the patentee was still engaged within the 2-year period in modifying and constructing a second device to overcome the difficulties of the original.

Plaintiff urges that mere delay in filing an application on an invention is not abandonment unless some independent inventor intervenes and forestalls the first invention, and relies upon Hanger v. Bowley, 298 Fed. 359 (1924). In that case there was no use of the artificial limb by the patentee from three to six years for periods of four months in each year, before he filed his application, and this was not followed by permitting the limb to be scrapped and leaving the structure entirely out of the application. It [fol. 1139] would seem that the most that this case decides is that mere delay is not abandonment.

In the case at bar substantial rights intervened before Gulick broadened his claims and brought forward his 1911 and 1914 pistons in 1922. It is true that in the Mason Jar case large interests had grown up in the way of manufacture, but the Supreme Court did hold that the patent was invalid, not only on the ground of public use, but on the

ground of abandonment. Counsel failed to distinguish between abandonment and estoppel, and if it is believed that there is a conflict between Hanger v. Rowley, supra, and the Macbeth-Evans case, supra, whatever may be said of these decisions there is no question but the rule in this Circuit is the law as stated by the later Justice Clarke's decision, affirmed by the Court of Appeals and quoted with approval by the Supreme Court in Woodbridge v. U. S., supra.

There was no adjudication by the Patent Office on abandonment or public use, yet plaintiff urges that the failure of the Patent Office to act is a persuasive or controlling reason in this proceeding, and urges this notwithstanding there is no proof that the abandonment question was ever before the Patent Office.

There is no rule which requires such a holding here, even the rule of comity is hardly applicable. Comity is not a rule of law but one of practice, convenience and expediency, and as Mr. Justice Brown said in a patent case, Mast, Foos & Co. v. Stover Mfg. Co., 177 U. S. 485 (1899) at p. 489:

"It demands of no one that he shall abdicate his individual judgment, but only that deference shall be paid to the judgments of other coordinate tribunals. Clearly it applies only to questions which have been actually decided, and which arose under the same facts."

And further, in answer to this argument:

"Comity, however, has no application to questions not considered by the prior court, or, in patent cases, to alleged anticipating devices which were not laid before that court."

Plaintiff relies upon Gordon v. Walcott, 42 F. (2d) 55 (C. C. A. 6, 1929), which involved an interference proceedings and patentability had been considered in another suit between the same parties. Gulick may have been "thinking of reduction to practice and not a public use," but as in [fol. 1140] the Allison v. Ideal Filter case, supra, he made out a public use, and after recess, a case of abandonment; and the Patent Office did not find that Gulick had done "no more than reduce to practice in 1914," for the Patent Office had never passed upon these questions.

If there should be question as to whether Gulick's reduction to use of the 1911 and 1914 pistons was in fact a

commercial use, a recent decision gives light on this subject. That the actual construction of the early Gulick pistons in evidence here could not be patented after the falling of the bar of the statutory period, seems elementary, yet such rule has been questioned and was answered in U. S. Blind Stitch Mch. v. Reliable Mch., 67 F. (2d) 327 (C. C. A. 2, 1933). There a heating machine had been claimed in a former application, was rejected by the Patent Examiner and dropped by the inventor. Later another claimed this device and the court held abandonment had occurred more than two years before. Judge Manton said, p. 329: "This constituted a sufficiently clear anticipation by a machine which had been reduced to practice," and cited Corona Cord Tire v. Dovan Corp., 276 U. S. 358 (1928). The question of reduction to practice was considered by the Supreme Court in this case, and Mr. Justice Taft said, p. 384:

"It is a mistake to assume that reduction to use must necessarily be a commercial use. If Kratz discovered and completed, as we are convinced that he did, the first use of D. P. G. as an accelerator in making vulcanized rubber, * * *. It is not an abandoned experiment because he confines his use of the rubber thus produced to his laboratory or to his lecture room. It is doubtless true that Kratz, by his course in respect to his discovery as to the use of D. P. G., has abandoned any claim as against the public for a patent, * * *."

The court concluded that the first discoverer of the useful accelerator in the vulcanization of rubber was Dr. Kratz and not Weis; so here, Gulick's testimony established his early reduction to use, and so he could not more than two years thereafter claim discovery. This comment omits any consideration of the reduction to use by Monckmeier or of the later uses by Schoengarth and Long.

There is also great significance in Gulick's testimony about his early use of these pistons to the cause of de- [fol. 1141] fendants, for proof on this vital point comes from a hostile witness and gives strength to defendants' claims. Of such evidence, Mr. Chief Justice Taft remarked, in Eibel Coal Co. v. Minnesota Paper Co., 261 U. S. 45 (1923), p. 53, it is "a strong case" that is made from the testimony of opposing witnesses.

Validity of Gulick Patent in View of Rights Intervening Before His Original Application Was Broadened

The Gulick patent was applied for November 30, 1917, and was issued July 21, 1931. There was also his use of the piston in 1911 and 1914. In this 20-year period many things happened in the improvement of pistons, which industry is bound up with the development of permanent molds in piston making, as replacing the old sand mold.

Packard Motor acquired the Gulick option in March, 1916; its assignment of the patent in August, and the patent application was filed November 30, 1917. His 1911 and 1914 pistons were forgotten, or in any event unmentioned until the Gulick amendment of November 12, 1922.

The independent piston manufacturer won in the controversy with the Aluminum Company of America when the Court of Appeals of the 8th Circuit held, in Aluminum Company of America v. Sterling Products, 66 F. (2d) 958 (1933), that there was no infringement in its use of permanent molds to make pistons. Here the distributor defendants urge that the plaintiff, particularly Packard Motor Company, notwithstanding intervening rights of others, so amended the specification and claims as to not only cover what had been in public use and in issued patents, but so as to convert the specification into the very antithesis. The adverse rights intervening relied upon by defendants are the Long pistons used by Franklin dealers as early as 1917, and the Long patent; the Spillman patent of 1919, with the piston marketed by Kant Skore, rights to which were acquired by plaintiff; the Schoengarth patent of 1916; the Monckmeier piston used in his racing car 1912 to 1916; the Hartog patent of 1920, acquired by plaintiff, and the Jardine and Maynard pistons in use before the radical change in the Gulick specification as amended September 12, 1922.

The file wrapper of the Gulick patent shows his application to describe a specific construction, viz. a piston structure in which the skirt is entirely separated from the head [fol. 1142] by a slot extending entirely around, the head being connected to the skirt by webs, and the skirt split between those webs. The original specification emphasized rigidity of the piston, stating one of its objects "to rigidly support the piston pin bosses of a piston from the piston walls," and by further stating the construction provides "an extremely rigid construction between the piston pin

bosses and the skirt." After the Hartog patent this wording of the Gulick application was changed and added to so as to make it "flexible" rather than "rigid." This followed the Hartog patent 1,842,022, filed February 16, 1920, and the Long pistons were also on the market at that time. The Gulick application was amended in October, 1921, to cover the Spillman structure which was exemplified in the Kant Skore piston, although plaintiff now says that the Spillman patent structure, which it owns, was worthless. Gulick's counsel further amends in December, 1921, to cover the Schoengarth patent construction, the Long patent 1,395,441 issued two months previously, and Gunn, a Packard engineer, had described the Long piston in "Automotive Industries" of January 29, 1920.

After the Patent Office rejected several claims in January, 1922, Gulick filed an amendment on September 12, 1922, wherein he converts "an extremely rigid connection" between the piston bosses and the skirt of the piston into a "flexible connection." This apparently is in order to strike Hartog and also Long whose pistons had been in service for over two years and were described by Packard's engineer two years and a half before. Hartog, on February 16, 1920, had filed an application for a piston which for the first time disclosed the utility of connecting a skirt with the head through the medium of flexible webs. His application went into interference with Pomeroy, owned by the Aluminum Company of America, and now patent 1,499,073 owned by plaintiff trustee. The Examiner decided in favor of the Aluminum Company but was reversed by the Board of Appeals on August 30, 1922 (Ex. 5-H3). This date is important for within two weeks thereafter, on September 11th, the Gulick application is assigned by Packard to the plaintiff, and on the next day the amendment is filed in the Patent Office, substantially changing the Gulick application.

The amendment contains claims taken from the Long patent and Hartog-Pomeroy interference. There is also a claim to catch the application of the Maynard patent 1,655,968 filed January 3, 1921, now owned by plaintiff, [fol. 1143] which Maynard piston was placed on the market by Maxwell after the Jardine piston had been finished. As before noted, plaintiff later acquired one-half interest in the Maynard patent.

After rejecting several of Gulick's claims, claim 27 which corresponded to claim 10 of the Long patent, was retained

and an interference was declared, Gulick having eliminated the "T-shaped" terminology.

Since the rule of the Patent Office is that where a claim is contained in an issued patent and goes into an interference with a pending application, neither the patentee nor the applicant can dispute the validity of that claim; Sachs v. Ball, 1927 C. D. 30; Hernandez-Mejia v. Kelly, 277 Fed. 609 (1922); Gowen v. Hendry, 37 F. (2d) 426 (1930); also there is the rule that claims are given the broadest construction as long as they will "read" upon the applicant's device; Sachs v. Ball, supra; Lynch v. Headley, 285 Fed. 1003 (1923); Woelm v. Hasselquist, 62 F. (2d) 365 (1933).

The Patent Office was in this dilemma: the Long patent reads upon Van Bever and Rainforth structures, the patents to Serex (French) and Ebbs, and the office had given claim 10 to Long and it later took the position that it did not involve any invention to split the skirt by Spillman & Mooers and Chenard & Walcker. The Office suggested five claims to Gulick which set out the feature of flexible webs, and this Gulick only accepted with reservation so he was not bound to the statement that patent structure was yielding, leaving it open to be later said that it was rigid. In these controversies Gulick won all the interferences which were not dissolved on account of unpatentability.

In April, 1931, Gulick asked additional amendments to the specifications and claims. Being powerless to dispute the additional claims of the amendment, which now added "another object of the invention is to rigidly separate the piston bosses of a piston from the piston walls," the Examiner thought this covered something the applicant did not have in mind when his case was filed, or at least "which is beyond anything disclosed in his application." Gulick then amended in May, 1931, filing his Supplemental Oath, where it is pointed out that the Patent Office is bound by the higher tribunals, and following this the application was allowed May 16, 1931 and the patent issued in July.

In this situation defendants urge that the Patent Office was misled, and that after a decision by the courts, Long [fol. 1144] v. Gulick, 17 F. (2d) 687 (1927), the Patent Office was in a position where it could not refuse to allow the issue of a patent, Hartog v. Long, 47 F. (2d) 369 (1931). Defendants urge the intervening rights of Spillman (Kant Skore) and Hartog; that Maynard (Maxwell) and Jardine (Aluminum Company of America) were purchased; that

Long was harassed by an interference proceeding and a suit (Ex. 4-Z); that Monckmeier had used his pistons in racing cars, and that Schoengarth had made and sold his pistons.

Defendants urge that there has been such manipulation that a Court of Equity should look with disfavor upon plaintiff's application. The leading case relied upon is Railway Company v. Sayles, 97 U. S. 554 (1878). An invention involving a brake system for railways, filed in 1847, laid dormant for five years when it was "considerably modified" and changed after being purchased by Tanner. Reliance was had upon a prior reduction to practice in the fall of 1846, and in the meantime brakes were made by others and had gone into general use. Mr. Justice Bradley said, p. 563:

"It will be observed that we have given particular attention to the original application, drawings, and models filed in the Patent Office by Thompson and Bachelder. We have deemed it proper to do this, because, if the amended application and model, filed by Tanner five years later, embodied any material addition to or variance from the original,—any thing new that was not comprised in that,—such addition or variance cannot be sustained on the original application. The law does not permit such enlargements of an original specification, which would interfere with other inventors who have entered the field in the mean time, any more than it does in the case of reissues of patents previously granted. Courts should regard with jealousy and disfavor any attempts to enlarge the scope of an application once filed, or of a patent once granted, the effect of which would be to enable the patentee to appropriate other inventions made prior to such alteration, or to appropriate that which has, in the mean time, gone into public use."

The rule that runs through the authorities seems to be that an amendment of something new will not be permitted. In Webster Electric Co. v. Splitdorf Electrical Co., 264 U. S. 463 (1924), the original application of the Kane patent was [fol. 1145] filed in February, 1910, and after prevailing in an interference with Podlesak the claims in suit were also made in an application over five years after the issue of the Podlesak original patent. Mr. Justice Sutherland, speaking for the court says, p. 465:

"It will thus be seen that claims 7 and 8 were for the first time presented to the Patent Office, by an amendment

to a divisional application eight years and four months after the filing of the original application, five years after the date of the original Podlesak patent, disclosing the subject matter, * * *."

And further:

"A comparison of these claims, as set forth in the patent, with the claims in the original application, to say the least, leaves in doubt the question whether they were not so materially enlarged as to preclude their allowance on the original application. Railway Co. v. Sayles, 97 U. S. 554."

The court then continues, p. 465:

"But this aside, the evidence establishes to our satisfaction that Kane did not originally intend to assert these amended claims, because he considered their subject matter one merely of design and not of invention; and the inference is fully warranted that the intention to do so was not entertained prior to 1918."

As to adverse rights established by the issue of the Podlesak patent, the Supreme Court says, p. 465:

"During all of this time their subject matter was disclosed and in general use; and Kane and his assignee, so far as claims 7 and 8 are concerned, simply stood by and awaited developments."

The court discusses and distinguishes decisions in reissue cases and copying of claims in interference cases, and concludes, p. 471:

"Our conclusion, therefore, is that in cases involving laches, equitable estoppel or intervening private or public rights, the two-year time limit prima facie applies to divisional applications and can only be avoided by proof of special circumstances justifying a longer delay. In other words, we follow in that respect the analogy furnished by the patent reissue cases."

[fol. 1146] The recent analogous case is Powers-Kennedy Contracting Corp. v. Concrete Mixing & Conveying Co., 282 U. S. 175 (1930), which involved a device for mixing and conveying materials, particularly concrete, in which an air

pipe was shown for the purpose of agitating concrete and preventing it from packing. The application was filed in 1907, changes were made in the specification, new claims were added in 1911 and expanded in 1913 by assigning to the air pipe the function of impairing movement of the concrete rather than agitation, so as to inject into the case what Mr. Justice Roberts of the Supreme Court called "a so-called slug theory." The change in front appeared thus: the Leake application was filed in the Patent Office nine months after McMichael, the applicant of the patent in suit filed, which applications were thrown into interference; the McMichael interests purchased the Leake applications with the result that both patents were granted, the McMichael in 1915 and the Leake patent in 1917. Mr. Justice Roberts says, p. 185:

"And, even if the mode of operation is as claimed, it is to be remembered that Leake in his application of October 7, 1907, uses the same words to describe the operation of his nozzles as we find McMichael subsequently inserted in his specifications and claims. When this application came into interference with McMichael's, he, of course, became familiar with Leake's claims. It is significant that he then amended his claims, almost in the very words of Leake. This of itself destroys the patent. Railway Co. v. Sayles, 97 U. S. 554; General Electric Co. v. Sangamo Electric Co., 174 Fed. 246; Lopulco Systems, Inc., v. Bonnot Co., 24 F. (2d) 510."

Lopulco Systems v. Bonnot Co., 24 F. (2d) 510 (C. C. A. 3, 1928), approved by the Supreme Court, involved a method of feeding coal to furnaces, but did not emphasize the so-called "long flame process" for a furnace. More than two years after the filing of the original application and more than two years after a public use, the long flame theory was for the first time injected into the application. The court held that the process was not suggested by the original disclosure and denied relief on the authority of Railway Co. v. Sayles, supra.

Where the original application did not mention the possibility of the use of silicates but that feature was added four years after filing, such practice was denied in Dwight

[fol. 1147] & Lloyd Sintering Co. v. Greenawalt, 27 F. (2d) 823 (C. C. A. 2, 1928), Judge Learned Hand saying, p. 828:

"We decline to accept such obscure referenees as even premonitions of the matter added later. They are straws at which the patentee now clutches to extend his invention."

In this Circuit the decisions affirm and carry out the principles announced in the above decisions. Wagenhorst v. Hydraulic Steel Co., 27 F. (2d) 27 (C. C. A. 8, 1928), was a case where the original specification as filed disclosed a number of embodiments and one of these later was included in a divisional application which merely amplified the original, but did not change any theory of action. No adverse rights were involved for the claims of the original application covered the interfering as well as defendant's device, and Judge Denison distinguishes the authorities; and in Wirebounds Patents Co. v. Saranac Automatic Machinery Corp., 37 F. (2d) 830 (C. C. A. 6, 1930) he also discusses questions of interfering rights which are not applicable to the situation here, although relied upon by plaintiff.

Michigan v. Sutherland, 29 F. (2d) 179 (C. C. A. 6, 1928), urged by plaintiffs as authority for their position, fails to meet the situation presented on the facts here, for as Judge Knappen there said, if amendments to the patent application "only amplify or explain" what was already reasonably indicated to be invention, the patent is not invalidated. Reo Motor Car v. Gear Grinding, supra, also relied upon by plaintiffs, is not conclusive, for there there was no change except descriptive changes in the claims after the appearance of adverse rights, for as Judge Denison says, p. 970:

"There was no estoppel arising (if it might sometimes so arise) from a failure to claim the broader monopoly until after some competitor has put out a device not reached by the earlier claims. From the beginning to the end of these applications, Ward was constantly seeking a claim which would clearly have covered every one of defendant's different practices."

As to the conduct of inventors and their patent counsel when they see something about to be used in a competing device which they would then include in their original application, as Gulick was also an inventor of large experience,

[fol. 1148] the language of Judge Denison in Wagenhorst v. Hydraulic Steel, supra, at p. 32 is quite in point:

"If this conclusion were in doubt, it would be confirmed by Wagenhorst's own conduct. The mechanical advantages of this construction, as just stated, were obvious. Wagenhorst was an inventor of large experience in this particular line and was represented by able solicitors. It is not to be doubted that they would have intended to claim every specific invention which they thought present. It did not occur to either of them that the construction shown in Figure 4 involved any invention in this specific respect. It was only when they saw it was about to be used in a competing device, and realized that, if they failed to secure their broader pending claims there would be no infringement, that they concluded there was specific invention in these details of the assembly, and decided to make the specific claim. We think their first conclusion was the right one."

Gulick 1911 and 1914 Pistons Not Illustrated or Described in the Patent

The 1911 and 1914 pistons produced by Gulick do not appear in his application nor in the affidavit of December 24, 1931, nor in the correspondence of Gulick with Packard produced at the trial; and the existence of the 1914 piston was first relied upon in the affidavit of November 8, 1922, while the 1911 piston appeared later. Defendants urge that such situation, together with the fact that Gulick scrapped his 1911 motorcycle block test and Renault car pistons, permitted the 1914 aluminum piston to be scrapped, are reasons which establish that the 1911 and 1914 pistons were actually abandoned; and this is in addition to the fact that they were in public use for more than two years before Gulick filed his application.

To answer this, plaintiff urges that it was not necessary for Gulick to preserve his pistons, illustrate them in drawings or describe them in his specification, because those drawings and specifications disclosed Gulick's earliest embodiment of this invention for what he considered as preferred, and that he was therefore entitled to build claims covering those 1911 and 1914 pistons upon such descriptions and drawings.

[fol. 1149] The rule appears to be that after a certain structure is described in specifications and illustrated in

drawings, the applicant is not entitled to cover all claims and monopolize every way of securing the same result, for as was said in Electric Signal Co. v. Hall Signal Co., 114 U. S. 87 (1885), where Mr. Justice Matthews said, p. 96:

"But this result or idea is not monopolized by the patent. The thing patented is the particular means devised by the inventor by which that result is attained, leaving it open to any other inventor to accomplish the same result by other means."

To the same effect is Willett Mfg. Co. v. Root Spring Scraper Co., 55 F. (2d) 858 (C. C. A. 6, 1932), and was followed in Cleveland Tractor Co. v. International Harvester, supra.

That a claim cannot be taken by itself, but must have a clear foundation in the specification, is affirmed in Permutit Co. v. Graver Corp., 284 U. S. 52 (1931), where a claim was held invalid because there was no basis to show the construction. The structure of the Gulick application and the patent as shown by the evidence in this case, cannot be said to have been a further improvement upon the 1911 and 1914 pistons, for Gulick was not then entitled to put a preferred embodiment in his application and immediately proceed to cover everything for securing the same result, for the Supreme Court has said that cannot be monopolized.

The Sterling pistons, particularly Ex. CCC, apparently approach more closely to the Gulick 1911 and 1914 pistons than does the structure of the Gulick patent. The Sterling pistons have gone into use, while there is no evidence that the structure of the Gulick patent was ever generally used, so that it can hardly be said that the structure of the Gulick application can be considered an improvement over the Gulick 1911 and 1914 pistons.

In another view plaintiff overlooks the fact that the Gulick 1911 and 1914 pistons were specific things as distinguished from what is disclosed in the Gulick application and patents. Those pistons, after being tried out to Gulick's satisfaction in 1911 and 1914, and plaintiff is here bound by Gulick's statement, were scrapped and so thoroughly discarded that they do not appear again until November, 1922, over a year after the Long patent 1,395,441 has is-

sued. It would seem that proof of the abandonment of an inchoate right cannot be restricted by showing the abandon-
[fol. 1150] ment of things, such as pistons. The reason of such a rule is illustrated by the rule that restriction of a patent may be established during the prosecution by cancellation or amendment of claims, and the leading case is I. T. S. Rubber Co. v. Essex Co., 272 U.S. 427 (1926), referred to hereafter on the question of infringement. Defendants urge that this case is only as to a file wrapper estoppel, but the reasoning seems applicable to the situation presented here.

When Gulick abandoned the 1911 and 1914 piston constructions, actually (as well as by public use), he could not thereafter include them by implication in his November 30, 1917, application. He did not include them, and there is no testimony that he ever told Tibbetts, the Packard attorney who bought the application, about them, and Tibbetts did not include them in the application, for as late as December 24, 1921, the drawing of the application was included in Gulick's affidavit.

Gulick Patent Validity as Affected by Material Change in the Specification

Defendants urge that the specification as filed was changed to something totally different from the original disclosure. This change was made nearly five years after the filing of the application, after pistons embodying the changed construction had been on the market and in public use for five years before the change was made. The adverse decision in the Hartog-Pomeroy interference seems to have been the moving cause for the change.

The original specification states that it "provides an extremely rigid construction," (Ex. 4-L, p. 1839) and five years later the amendment is that the webs or flanges were yielding in character, which was featured as a distinction over Spillman & Mooers and Chenard & Walcker. Flexibility of the webs is nowhere mentioned in the original claims, directly or indirectly. Flexibility is relied upon by plaintiff to make out infringement (Tr. pp. 228-9).

Defendants urge invalidity of the Gulick patent, claiming such effect of the amendment to the specifications and claims, since flexible construction of the web is there shown for the first time, and further, that the Gulick patent fails

to describe in the specification the metes and bounds of the construction having the required flexibility.

While the decisions of the Patent Office in the several piston cases were affirmed by the Courts on appeal, such [fol. 1151] decisions now appear to have been founded upon a misconception of Revised Statute 4888, as were prior decisions of the Federal Courts which were overruled by the Supreme Court in the recent Permutit Co. v. Graver Corp., 284 U. S. 52 (1931). That case involved the lack of disclosure and definition in patent specification and claims as issued. Its decision is based upon a construction of R. S. 4888, which applies to the disclosure and definition in the specification and claims of a patent as filed, as well as to one as issued. Of this statute Mr. Justice Brandeis said, p. 60:

"The statute requires the patentee not only to explain the principle of his apparatus and to describe it in such terms that any person skilled in the art to which it appertains may construct and use it after the expiration of the patent, but also to inform the public during the life of the patent of the limits of the monopoly asserted, so that it may be known which features may be safely used or manufactured without a license and which may not."

That case had to do with filter beds, and a question arose if a "free" bed might have been valid, but that sued on was invalid for lack of disclosure as prescribed by R. S. 4888. There was no mention in the specification of either "free" or a "locked" zeolite bed, and the court said as the patentee had failed to give in the specification a written description, and had likewise failed particularly to point out and distinctly claim the free zeolite bed, as "the part improvement or combination which he claims as his invention or disclosure," that the patent was void.

The court reviewed the previous decisions on that patent, and the attitude of the courts, including the decisions of the 6th Circuit, 13 F. (2d) 454, 37 F. (2d) 385, and said that such views rested upon misconception, concluding, p. 60:

"Moreover, while drawings may be referred to for illustration and may be used as an aid in interpreting the specification or claim, they are of no avail where there

is an entire absence of description of the alleged invention or a failure to claim it."

The rule of this case has since been applied by the 6th Circuit Court of Appeals in Bettendorf v. Ohio Steel Foundry, 56 F. (2d) 777 (1932), affirming his Honor, Judge Hahn, of this District. In that case the alleged feature of the patent was the location of journal bosses of a rail-[fol. 1152] way truck, and this had not been set forth in the claims nor described in the specification. The patent was held invalid as within the prior art. To the same effect are the recent cases of Anchor Cap & Closure Corp. v. Linhardt, 56 F. (2d) 542 (8 C. C. A., 1932), involving a jelly jar and cap, and Helfrich v. Solo, 59 F. (2d) 525 (7 C. C. A., 1932), where was involved a patent on a cosmetic compact which did not disclose information as to the ratio between kaolin and chalk and the court found that the alleged inventor had failed to disclose in his specifications or claims the novelty on which he relied, and the patent was held invalid.

In view of the statute, neither the specification as filed nor the specification as issued in the case at bar is a compliance therewith. There were no metes and bounds fixed in the Gulick structure, and plaintiff must fail if inherent flexibility is relied upon, as was done in the Patent Office, for both the Spillman & Mooers and the Chenard & Walcker patents meet that issue; and plaintiff having acquiesced in the position of the Patent Office, said that it was within the field of mechanical skill to split the skirts, while the Commissioner seems to have been misled as to the inherent flexibility of the Spillman & Mooers structure as shown by Ex. 3-P, and of the Chenard & Walcker patent as shown by the Ray Day piston.

Plaintiff's counsel rely upon the Supplemental Oath by Gulick as curing any defects in his applications. Such oath is unavailing in the presence of controverting facts such as are shown in this record, as was said in Steward v. Ellis v. Lee v. Howe, 1889 C. D. 243, p. 248:

"The supplemental oath, in cases where it is effective for any purpose, simply enables the applicant to cover and include in his claims such portion of his original disclosure or description as was not embraced 'in the statement of invention or claim originally presented.' It can-

not be permitted in any case to justify such a change as would require an alteration in the date of the application as a completed application."

This rule applies in reissue cases where the reissue application must be supported by an oath. Here the fact that the Patent Office allowed the amendment to be filed is not controlling, for someone might have been mistaken, as seems to have been the fact in the proceedings in this case.

[fol. 1153] Mooers Patent Validity as Affected by Attempt to Broaden Original Application and Material Changes in the Specification.

Defendants urge much the same situation as to the Gulick application is presented as to the Mooers application, where the specification was changed three years after its filing date. Here the attempt was to incorporate the so-called Mooers principle more than two years after the Long piston was on the market, to say nothing of Kant Skore, Maxwell and Jardine.

The Mooers principle is compensation for expansion by mechanical distortion of the skirt, as testified by Dr. Jefries who would apply it with many ramifications to all Sterling pistons except Ex. 3-J; this was not embodied in the Mooers application as first filed, and first appeared in the amendment to the Mooers specification filed January 4, 1921. After the Mooers patent was assigned to the plaintiff this "Mooers principle" of operation was discovered, and in the meantime the Ricardo patent had been granted, the Long pistons had gone into widespread use, and the art had become familiar with the slipper piston of the Ricardo type (Ex. 3-S) when the application for an amendment of the Mooers application was filed (Def. Ex. 4-L-1, p. 2000). This Mooers principle, therefore, is on the same footing as to the Mooers patent as the flexibility of the Gulick patent, and the reasons heretofore given for finding the Gulick patent invalid because of the extension of the Gulick disclosure apply equally to the Mooers patent which is also found to be invalid.

Validity of Patents Over Prior Art

Having considered defendants' claims that the Franquist patent was a combination including all that was in

the prior art, the next step is to consider the five patents in suit in the light of the prior patents and publications, in addition to the Franquist patent.

Gulick Patent and Prior Art

The inquiry is as to the standing of the specific Gulick piston shown in the drawing and described in the specification. The Gulick patent structure comprises a head isolated from the skirt by a circumferential gap extending around the piston below the lower ring land, which is accomplished by connectors extending from the head to the skirt and carrying the wrist pin bosses. Such connectors are attached [fol. 1154] in Fig. 1 to the skirt at points just below the wrist pin bosses and then down to near the bottom of the skirt, which attachments above that point are merely longitudinal ribs which have no effect on web flexure. (Stellman, Tr. pp. 530-1, Jeffries, Tr. p. 163.) The skirt is slit in the region between the wrist pin bosses and the structure is such that the webs will flex, although the original specification stated (Ex. 4-L, p. 1838) "the above described construction also provides an extremely rigid connection between the wrist pin bosses and the skirt of the piston."

Defendants urge that this specific structure was not patentable to Gulick regardless of any extension of supposed patent monopoly, to cover the Sterling and Ray Day pistons.

Franquist has a disclosure of a piston which is adapted to have a snug, sliding fit in the cylinder when cold, which upon expansion of the piston, automatically yields sufficiently to prevent its sticking in the cylinder; and the partial isolation of the head from the skirt, as accomplished in the Sterling pistons; and thus the sole distinction is that in place of provision for contraction by partially slotting the skirt vertically, in Gulick the vertical slotting is all the way through the skirt, and specifically, there is a single slot midway between the wrist pin bosses and connecting with the vertical slot.

Apparently the placement of the slot exactly in the center was not a criterion as far as the Gulick patent was concerned. (Jeffries, Tr. p. 175.) Slotting through piston skirts was not only old, as shown by the Ebbs patent of 1902, the Van Bever, Rainforth and Serex patents of 1912, the Vincent patent of 1913, and the Schoengarth patent of 1915, but there is also a cutting through of the vertical

slot in the Long patent of 1918 and 1919, the Spillman patent of 1919, the Hives and Jardine patents of 1920, the Maynard patent of 1921, and the Ray Day application of 1923. In this connection there is the piston ring which is slit through, admittedly ancient by the experts (Jeffries, Tr. pp. 94-6, and Stellman, p. 477), and the ancient use of expansion joints. Stellman considered slotting no particular trick (Tr. pp. 480-1) when he made Ex. B at Franklin in 1916, and he did that when ignorant of the Van Bever patent (Tr. p. 583).

Plaintiff's claim covering a T-slot to a trunk piston was allowed in an interference with claim 10 of the Long patent 1,395,441, which was allowed to Gulick as claim 13 (Defend-[fol. 1155] ants' Ex. 4-F). Thus neither Long nor the Patent Office could dispute its validity, which was afterwards affirmed by the Court of Customs and Patent Appeals. The hands of the Patent Office were thus tied in which is now urged to be an unpatentable subject-matter, and the Patent Office was in no position to controvert this after the grant of the Long patent.

Considering also the connections from the head to the skirt, the only difference between Gulick and Spillman & Mooers is that the connection in Spillman & Mooers is made at the bottom of the skirt and in Gulick the attachments are along the skirt; and this the Law Examiner held to be no patentable distinction (Defendants' Ex. 4-E). It is urged by plaintiff's counsel that Spillman & Mooers' patent structure has not gone into commercial use, although it is one of the patents relied upon as infringed in the Simmons case, supra.

The same situation arises from the Chenard & Walcker patent as the Spillman & Mooers, for the Law Examiner (Ex. 4-C) uses either patent as a basis, and held it involved nothing but mechanical skill to split the skirt.

As against the Gulick patent, the defendants claim:

(1) That Spillman & Mooers showed the separation of the head from the skirt, which was all that was required in a cast iron piston, and that Spillman & Mooers, before its expiration, was relied upon by plaintiff as covering the accused device (Ex. 1).

(2) That Franquist contributed the separation of the head from the skirt, slotting the skirt longitudinally to obtain a piston having a snug, sliding fit when cold, which

upon expansion of the piston when hot would automatically yield sufficiently to prevent sticking; this patent was also relied upon by plaintiff before its expiration, sued upon and royalties collected.

(3) That the Franquist invention gave a broader idea than the later Gulick patent, i.e., in addition to the isolation of the head from the skirt, the head is diametrically reduced to the circumferential slots and the reliefs in the region of the wrist pin bosses extend from bottom to top so as to merge into the diametrical reduction of the head with the slots.

(4) That splitting through the skirt of the piston vertically was practiced from 1902 to 1923, and T-slots came in 1912.

[fol. 1156] (5) That the decisions of the Patent Office held that it involved nothing but mechanical skill to split the skirts of Spillman & Mooers and Chenard & Walcker and to arrange the webs as in the Gulick patent.

Gulick claimed rigidity of his piston, yet as Associate Judge Bland said in the patent appeal of Hartog v. Long, 47 F. (2d) 367 (1931), "that Hartog's piston skirt has more flexibility than Gulick's, and that the elements responsible for such flexibility in Hartog differ materially from the elements responsible for it in Gulick cannot be denied." The court denied the Hartog claim on the ground that he sought to read into the count things suggested in the specification, but not embraced within the language of the count. The court then goes on to say that it seemed clear if the slot of the Gulick piston takes care of expansion, it is by reason of its flexibility, and finally awarded Gulick the claim. The court then concludes that Gulick should be regarded as prior inventor of the subject-matter, if he had the right to make the claim which was not denied in that court. The pertinency of that language here is that in this proceeding there is denial accompanied by proof that Gulick has both abandoned and is not the prior inventor of a piston with a skirt that flexes or yields.

The legal question is thus presented regardless of the decisions in the Patent Office acqui-sced in by plaintiff, does it involve invention on the part of Gulick to take old pistons such as Spillman & Mooers or Chenard & Walcker and split

the skirts of those pistons in the region of the wrist pin bosses?

Invalidity or Lack of Invention

Where the patentee had gone to another art to supply an expedient, it was not held to be a departure, and hence not invention. In the present case Gulick stayed in the same art, namely, pistons. In Crown Cork & Seal Co. v. Sterling Cork & Seal Co., 217 Fed. 381 (C. C. A. 6, 1914), was involved a patent for automatically sealing bottles by forcing a cap thereon. A previous patent granted on the same application of the patentee had partially solved the problem, which provided a yielding connection between the Pitman and the plunger engaging the cap to force it on the bottle. That situation corresponds to this, in that the skirt of the Franquist piston is later slotted so as to be permitted to contract when the piston gets hot. In that case the plaintiff relied upon an improvement, and the applicant having gone to [fol. 1157] another art, substituting a yielding arrangement upon the previous patent, and of this Judge Denison says, p. 385:

"The conception which lay at the bottom of plaintiff's 1898 patent, viz., that he could go to the yielding plunger art, or to some specific art, and adopt a yielding plunger as an element of a bottle-sealing machine, was a meritorious conception. It may have entitled him to a broad monopoly upon any use of a yielding plunger in that association (as was apparently secured to him by the first claim of his 1898 patent)."

He then continues in discussing the situation before the court, p. 385:

"That question is not before us, and we do not mean to intimate any opinion; but, however that may be, having had this conception on 1898 and having received a patent, he could not have another patent in 1899 which would do more than cover the improvement which he then discovered."

Judge Denison then states the reason for the unsoundness of such a procedure as follows, p. 385:

"Having gone into the yielding plunger art, and adopted and adapted the hydraulic cylinder yielding plunger into and for a bottle-sealing machine, and having thus bridged

over whatever gap there was between bottle-sealing machines and yielding plungers, and having thus incorporated the two arts together, he could not the next year adapt a mechanical trip-yielding plunger to bottle-sealing machine use and then get a valid patent covering any kind of a mechanical trip-yielding plunger when used in a bottle-sealing machine. Yet this is, in effect, his present position, and must be his position to succeed. There remained open for his 1899 patent only his adaptation, not his adoption."

He then quotes with approval the decision of Judge Killits in the District Court as follows, p. 385:

" 'But, when Painter patented the mechanism alleged to be infringed in this case, the art of bottle-sealing by crowns had already invaded the art of yielding pitman, of which the known forms were many, and had made an appropriation therefrom. Whatever may be the merits of his invention, [fol. 1158] we find nothing in his grant which shuts the door of opportunity to some other inventor to go to the yielding plunger art for an old device of this character'."

While it is elementary that invention may reside in a combination of elements which were theretofore separately old in the art, in order to sustain such combination the inventor must do more than make a judicious selection from the devices of the prior art. Merely doing this, as said by Judge Hickenlooper in Newcomb, David Co. v. Mahon Co., 59 F. (2) 899 (1932) at p. 901, "is the exercise of mechanical skill reasonably to be expected in the development of the art, and has repeatedly been held insufficient to evidence invention, whether such decision be placed upon the ground of aggregation or upon the lack of an exercise of an inventive faculty," citing Concrete Appliances Co. v. Gomery, 269 U. S. 177 (1925). In another decision by Judge Hickenlooper, in Bettendorf Co. v. Ohio Steel Foundry Co., 56 F. (2d) 777 (C. C. A. 6, 1932), the court said, p. 778:

"It would require no exercise of the inventive faculty merely to combine these desirable and well-known elements of the prior art structure—especially under the stimulus of newly adopted standardization requirements."

And further, p. 779:

"But, after all is said and done, there still remains the question of fact whether the patent discloses an exercise of

the inventive faculty, in view of the state of the art, or merely mechanical skill; and the question of law, whether the claims properly protect the patentee in the invention which he has really made."

While it is within the province of the court to decide this case on the ground of non-infringement, as was the result in Crown Cork & Seal Co. v. Sterling Cork, supra, the facts here seem to warrant going further and holding that the claims on the Gulick patent are invalid as in the last case cited. Other cases to the same effect in this Circuit are Oil Conservation Engineering Co. v. Brooks Engineering Co., 52 F. (2d) 783 (1931), Sands Mfg. Co. v. Smith, 53 F. (2d) 459 (1931), and Rhamstine v. Sparks-Withington Co., 58 F. (2d) 583 (1932). The Supreme Court early so held [fol. 1159] in a case, Thatcher Heating Co. v. Burtis, 121 U. S. 286 (1887), involving the use of the old fuel magazine in a particular base burner, where Mr. Justice Matthews said, p. 294:

"When this fuel magazine was thus transferred from one kind of stove to another, in its new situation it performed precisely the same function, with respect to the fuel and the fire, as it had always been accustomed to perform in its old place * * *"

and this was followed in Thomson Spot Welder Co. v. Ford Motor Co., 265 U. S. 445 (1923), where the Supreme Court approved the language of the Court of Appeals of this Circuit, and said, p. 451:

"Although invention is not necessary negatived by the fact that each element of the combination is old, the question of fact whether the combination itself involves invention in view of the prior art is always present."

A recent holding of lack of invention appears in Naivette, Inc. v. Bishinger, 61 F. (2d) 433 (1932), where a re-issue of patent to Decker on permanent waving had been held valid and was reversed by the 6th Court of Appeals, Simons, Judge, saying at p. 437:

"We fail to see invention in Decker. He combined old elements, but manifestly in such a way as must have been obvious to anyone skilled in the art, and the combination produced no new result. If what he did marked any im-

provement in the art, it solved no real problem and answered no recognized need, and such advance, if any, as was achieved was altogether too trivial to rise to the dignity of invention. Seymour v. Ford Motor Company, 44 F. (2d) 306."

Jardine Patent and Prior Art

The inquiry is as to whether the specific structure shown in the Jardine patent amounts to invention in view of the prior art. Defendants urge that plaintiff takes another type of piston, a slipper piston as shown in Jardine, being specifically that of the Ricardo patent No. 1,294,833, and upon this would uphold another patent for a split slipper piston.

Testimony at the hearing showed that Jardine is also the basis of Maynard, and that to Jardine Maynard merely [fol. 1160] added an oil wiping ring at the bottom. The testimony showed that Jardine knew of the Ricardo piston and its development; that it was tried out by the Aluminum Company of America, and plaintiff's expert produced a Ricardo piston on rebuttal. An exemplification of Ricardo piston was shown in the publication of "Automobile Engineer" in 1918 (Ex. 3-S), which piston had been tried out by plaintiff, so that there is no basis for surprise in this proof which was not pleaded in the answer. Comparison of the Jardine and Ricardo pistons shows that both are slipper pistons, being distinguished in that Jardine split both slippers, which practice was known to the prior art from Ebbs in 1902 to Long in 1919.

The webs of Ricardo are thinned down, which plaintiff claims was already done by Gulick in his patent disclosure. While the webs of Ricardo are thinner than those in the Jardine patent, the difference seems to be one of degree. The isolation of the skirt from the head goes all the way around as in the Spillman & Mooers and Chenard & Walcker patents, and as in Franquist considering the slot as going all the way around as a part passes through the air. The form of the slippers of Jardine are appropriated from Ricardo in making one slipper longer and wider than the other. There was considerable evidence that the Jardine piston is simpler, lighter and cheaper than Gulick, which is due to its being a slipper piston. The statement of plaintiff's expert that Jardine was the first single wall piston to flex overlooks Franquist in view of the tests and the testimony in this record. Jardine pistons were never sold, have never

gone into commercial use, although plaintiff's expert says that the Ricardo piston was used in Europe. Plaintiff's claim is that Jardine was followed by Maynard, a better piston, which was developed by Maxwell.

The Jardine piston seems to be invalidated by the Ricardo piston which was known to Jardine when he started to work on it, and the slitting of the slipper piston of Ricardo by plaintiff's assignee, as Gulick had done with the Spillman & Mooers piston, fails to show any inventive effort. The discussion of the authorities in Crown Cork & Seal Co. v. Sterling Cork, supra, and the cases there cited, are to the same effect.

Before Jardine filed his application, the Long piston was on the market for perhaps three years. Long's application for patent No. 1,872,772 was in interference with Jardine, involving claim 5 of the Long patent, the decision was ad- [fol. 1161] verse to Jardine, so the Jardine patent if valid is valid to cover only the exact invention disclosed, for the Jardine claims relied upon are invalid in view of the Long pistons, the applicable rule of the patent law being that which if later will infringe if earlier will anticipate. The claims of the Jardine patent relied upon are invalid in view of the Long pistons.

Maynard Patent and Prior Art

This inquiry is as to the standing of the specific Maynard piston shown in the drawing and described in the specification. Besides the patent stating that this invention relates to pistons, Maynard says (p. 1, l. 2) that the patent "has for its object the prevention of the 'pumping' of oil and the 'freezing' due to excessive expansion."

Defendants urge that through Maynard plaintiff is attempting to monopolize the application of the same old split piston with its dashed-in relief, with its head diameter reduced, and with an oil groove, all claimed to be old in the art. Defendants are not limited to the dashed-in relief, for plaintiff contends that the other Sterling pistons with relief (Exs. BBB and CCC) come within the scope of the Maynard patent.

Maynard admits the employment of the old expedient of longitudinally slotting a piston skirt, in the specification (p. 1, ll. 16 et seq.), and would add thereto an oil groove between the piston ring portion and the skirt portion which

is called "a continuous annular groove." A smaller recess for the "film of oil around the piston" was described in the Howe patent 908,569, and which use had been followed by licensee of that patent (Tr. pp. 1067-8). The slotting described in the Maynard patent was in quadrants, leaving one-half of the groove in the air, and the only language of the patent about the web structure and splitting which is claimed to be equivalent to a relief, is p. 1, ll. 60, et seq., concluding:

"Thus there are formed recesses H surrounding the bearings G with segmental skirt portions on opposite sides thereof and an annular skirt portion below said segmental skirt portions,"

and with reference to function they have stated as follows:

"Any oil accumulating in the recesses H will follow down the webs F and there is no chance at any point for [fol. 1162] the accumulation of oil adjacent to the rings."

Any reference to flexing of the skirt is omitted from the Maynard patent. Claim 6 is for a combination of a head, webs, a skirt integral with said webs "relieved adjacent said webs to a point between the bosses and the end of the skirt," and circumferential and longitudinal slots. The reliefs are not dashed-in but are similar to the reliefs of Franquist. Nowhere in the patent is there any statement about Keystone relief, found necessary to make function commercial pistons like Exs. 1 and 17.

The plaintiff's expert testifies that Maynard is a commercially successful piston, combining a number of features (Tr. pp. 77, 121-2). Maynard does combine a number of features, namely, a trunk piston having the expedients of the prior art, to which has been added in practice a Keystone relief not disclosed in the Maynard patent. Defendants claim that without such Keystone relief the Maynard piston is not a commercial success, and the proof offered by plaintiff that the Maynard piston operates successfully without the relief is not convincing.

Maynard was on notice as to what preceded him, for there was the Jardine piston and the Long piston. Plaintiff's expert testifies that after the test of the Jardine piston on a Maxwell car, Maynard being Chief Engineer of the producing company, "this Maynard development

came along * * * and the Maynard piston is the one that was adopted in the car." (Tr. pp. 131-132.) Plaintiff's expert says that Maynard is like Jardine except that the skirt is completed at the bottom and Maynard added the old oil wiping ring (Tr. pp. 77, 137) which was shown in the Schoengarth and Roots British patent, that Maynard went back to Schmiedeknecht, for both Maynard and Schmiedeknecht followed the Ferry British patent, that the Maynard piston is like the Jardine from the boss up, and like Schmiedeknecht from the boss down; and finally that the commercial piston (Ex. 17) is like Jardine from the boss up and like Gulick from the boss down, and differs from the unslotted Ricardo in that Maynard has a wiping ring at the bottom.

Coming to the operation of the Maynard piston, it appears that the top was not sufficiently flexible to compensate for all expansion, which is secured in the commercial piston (Exs. 1 and 17) by the Keystone relief not shown in the patent. While two rough castings were [fol. 1163] produced without the Keystone relief, the record shows that after the filing of the Maynard patent application, change was made to give the Keystone relief (Ex. 22). So the piston before the court is the piston of the Maynard patent which is without the Keystone relief. A significant fact is that Chrysler abandoned the use of the Maynard piston although owning a half interest in the Maynard piston (Tr. p. 130). The Franquist piston is a complete answer to the Maynard piston, for it shows the structure, function and mode of operation of the Maynard patent, as is the Long patent 1,395,441 which was tested by plaintiff's witness, Burns, at Franklin as early as 1918, and Stellman says (Tr. p. 525) that all Maynard did was to put the T-slot of Long on the piston of Schmiedeknecht.

Finally it must be said that plaintiff cannot even rely upon an alleged copying of the Maynard piston by defendants, in view of the failure of the patent to disclose an essential feature necessary to make it work, that is, the Keystone relief, for as said by Judge Hickenlooper in Bettendorf v. Ohio Steel Foundry Co., 56 F. (2d) 777 (C. C. A. 6, 1932), at p. 779:

"Clearly if the claims as stated fail to disclose a patentable invention, no license is required, the device may be used and made by anyone."

The Maynard patent represents a collection of old expedients, each employed in the usual capacity, which the courts have consistently refused to recognize as a patentable combination. Similarly, a valve patent was recently held invalid in Central Brass Mfg. Co. v. Republic Brass Co., 63 F. (2d) 287 (1933), where Judge Hicks said, reversing His Honor Judge West of this District, p. 289:

"Spaced interior partitions with aligned ports, angular passages, and hollow sleeves having lateral ports communicating therewith are all admittedly very old in valves relating to the plumbing art. Bloch was chargeable with knowledge thereof, and we think that the introduction of these elements into his combination was an obvious one. Acting upon his knowledge, skill and experience, he simply took another step in the evolution of the bathtub and shower art. He produced a cheaper, more compact, and perhaps a more convenient valve; but we do not think that his achievement was the result of the exercise of the inventive faculty."

[fol. 1164] Mooers Patent and Prior Art

As to this patent, a similar situation is presented as to the three preceding patents. Plaintiff owns the Spillman & Mooers patent; in fact, the Spillman & Mooers patent was the foundation of the original trust agreement, to which was added this Mooers patent. Under Spillman & Mooers, royalties were collected until its expiration, and it was one of the patents in the suit of Cleveland Trust v. Simmons Mfg. Co., hereinbefore considered. Following the expiration of the Spillman & Mooers patent it is now disowned by plaintiff as being impractical.

Mooers states in his specification (p. 2, ll. 99 et seq.) that the construction of the piston embodying his improvements may be carried out in permanent molds, which was not true of a construction for the old patent, and that he had in mind the use of permanent molds in the design of his improvement. When the Spillman & Mooers patent was issued in April, 1914, the patent molding process had not been developed, so that with the advent of permanent molds there was a requirement of ready extraction of the core from the mold. Plaintiff's expert admits this particular piston never went into commercial use (Tr. p. 114), that it was not satisfactory (Tr. p. 107),

has no skirt flexibility, is inferior to the construction of Gulick and Jardine, and claims for the patent that it discloses relief adjacent to the bosses and permits mechanical distortion and was the first to compensate for heat by distortion.

The Spillman & Mooers patent seems to be a complete answer to this Mooers patent, for Mooers went back to the construction of Franquist by having the connection of the head to the skirt raised and eliminating the attachment made at the bottom of the skirt. This was a compromise between the efficiency of heat transmission and efficiency of operation, and a similar practice was said by the Patent Examiner in the Gulick interference (Ex. 4-E, pp. 1661-1662) as requiring no inventive effort.

Plaintiff urges that the claim reaches the Ray Day piston for the connection is from the head to the wrist pin boss, and urges that the Ray Day piston thus infringes the Mooers patent. Neither the patents of Spillman & Mooers or the Chenard & Walcker patents show reliefs in the region of the wrist pin bosses, although prior to both, pistons had been relieved in the region of the wrist pin bosses. Relief was accomplished by oval [fol. 1165] grinding, as now shown in the Plymouth piston (Ex. 3-O), and which expert Stellman says is described in the Chenard & Walcker patent. So the question arises, if reliefs in the region of the wrist pin bosses by oval grinding was not sufficient, and separation of the head from the skirt was not sufficient, does it constitute invention to use both features in one piston, which seems to be what has happened with the Ray Day piston as regards the Mooers patent.

On the basis of the authorities heretofore cited, such combination cannot be invention, for the next might combine separation of head from skirt with oval grinding and simple relief; another might add a tapering of the skirt, to say nothing of other combinations which might be offered.

Considering the Sterling piston, the Franquist patent is a complete answer to Mooers, as is the Gulick 1914 piston (Ex. 51), except the two connections inside the piston and the absence of relief opposite the wrist pin bosses, which Gulick carefully said his early piston did not have.

Plaintiff having made reference to the Mooers patent a clear issue in this case, by contending that the accused devices infringe, and from the constructions it appearing that as far as the Mooers patent is concerned the accused devices

are in the public domain, the claims of the Mooers patent relied upon as infringed are found to be invalid and void.

Schmiedeknecht and Prior Art

This patent was acquired by the plaintiff after several transfers from the Bohn Aluminum & Brass Corporation for an interest in the trust estate. Ex. 1 is the only accused device as to this patent. With the advent of aluminum and the consequent difficulty of securing a proper fit, this invention is put forward as a light weight cast iron piston, apparently to obviate the difficulties arising from aluminum pistons (p. 1, ls. 35-46).

The specific construction of the patent provides a piston in which the weight is reduced by cutting holes in the side walls, and would replace the previous practice of mounting wrist pin bosses on the side walls by the use of ribs or webs. To obviate the necessity of thickening the walls of the piston, Schmiedeknecht proposes webs on the inside of the piston and supporting the bosses each at one end from the web and at the other end from the head (p. 1, ls. 97-107, p. 2, ls. 4-12).

[fol. 1166] Ex. 1 does not employ the Schmiedeknecht construction but supports the wrist pin boss intermediate its end. The construction of Schmiedeknecht is exemplified in the prior art by the Pugh British patent, where each boss is supported at its end from a cross-web extending to the head of the piston. Also, the Ferry British patent more nearly approached Ex. 1, for there the bosses are wholly supported by cross-webs.

Here again Ex. 1 follows the prior art more closely than it does the Schmiedeknecht construction. Plaintiff makes the issue by contending that a construction in which the boss is supported intermediate its ends, is the equivalent of a boss supported at the ends, and in view of the prior art, the finding is that the Schmiedeknecht patent is invalid and void.

Prior Uses

To establish prior use, defendants offered evidence of pistons made and used by Monckmeier in his racing cars as early as 1911, the pistons made and sold by Schoengarth in 1915, and the pistons made and sold by Long before May, 1916. If established, such prior uses by Monckmeier and

Schoengarth constitute a statutory bar against the plaintiff's claim on the Gulick patent. Prior uses as affecting the other patents in suit is also to be considered.

Monckmeier Pistons

Defendants offered in evidence proof of the existence of the Monckmeier piston from 1911 to 1916 producing the two pistons involved, a cast iron piston (Ex. 3-D) and an aluminum piston (Ex. 3-W). Monckmeier is a business man now engaged in the manufacture of tools and automobile appliances, and when racing Staver cars, slotted and used the pistons produced at the trial. Three additional witnesses were called, a mechanic who did machine work for Monckmeier on the 1911 piston, another now in the automobile repair business, who helped Monckmeier put the 1915 pistons in his car before the Elgin race when they were first used, and another in the manufacturing business in Chicago, who helped Monckmeier install the aluminum piston in his car in the early fall of 1914, before the Iowa City race and again saw the pistons before the Anamosa race of June 10, 1915. These witnesses were wholly disinterested, none were in the business of marketing or producing pistons, [fol. 1167] and by his own use, Monckmeier is barred of securing any patent rights.

Monckmeier testified he had the cast iron piston in his possession since 1912 after he had slotted it at Peoria, and had the aluminum piston since 1914. Both were used in races of which he testified, and to corroborate, magazines and newspapers were produced, checking the dates and showing that he competed in the races as he had orally testified, in several of which he won prize money.

After the recess plaintiff brought other witnesses who had known Monckmeier and of his racing, and whose testimony varied in details but in no substantial way discredited the facts as to Monckmeier's manufacture and use of the pistons in the races on the dates before established.

The construction of these old pistons is established by their production and offer in evidence, so there is no question about relying upon oral recollection as to the nature of such construction, such as was considered in the Barbed Wire case, 143 U. S. 275 (1892). In that case the court said that "the proof shall be clear, satisfactory and beyond a reasonable doubt," and recently the Supreme Court, in

Eibel Process case, 261 U. S. 45 (1923), Mr. Chief Justice Taft said, at p. 60, "that the evidence to prove prior discovery must be clear and satisfactory," but in each of these cases no original device was produced. Here not only are produced the original pistons described by three corroborating witnesses, but the dates of use are checked by public documents, newspaper and magazine articles, together with a record of a private contract.

A similar question was presented in Cleveland Tractor v. International Harvester, Equity No. 3860, where the decision of this Master was affirmed by his Honor, District Judge Jones, on March 25, 1933. The same authorities there cited are pertinent here, for there was involved a power take-off mechanism which had been used on a tractor in 1910, some three years prior to the application for the Strait patent. What was said in that case is quite in point here, and the following is from pages 37 and 38 of the Master's report:

"The courts have not forbidden the defense of a prior use in a patent case or the proof of such use by a paroled evidence. The question in each case is one of fact to be decided, whether the evidence which has been produced by [fol. 1168] the defendants proves the existence of the alleged prior use. If the device is simple, if the witnesses are apparently honest, if the circumstances are such as to have properly impressed the event upon their minds and memory, and particularly if they are familiar with the subject matter of the alleged invention, such prior use may be established by parol evidence. An early case discussing the evidence of prior use and hold- a patent invalid is Sipp Electric & Eng. Co. v. Atwood Morrison Co., 142 Fed. 149, where a discussion of such evidence appears at pages 153-5."

"Cases of prior use are summarized and discussed in Haggerty v. Rawlings Mfg. Co., 14 F. (2d) 928; which involved a patent relating to guards or pads for use in football suits. The evidence of prior use was the verbal testimany of four witnesses that it was common custom to make devices similar to the patented invention prior to the application for patent. Other cases, Chrone v. John J. Gibson Co., 247 Fed. 503; Lee v. Upson & Hart Co., 43 Fed. 670; Rochester Coach Lace Co. v. Schaefer, 46 Fed. 190; Groupe Drier & Boiler Co. v. Fiske Geiger, et al., 215 Fed. 110."

"Upon the strength of parol testimony of a prior use a patent for disk plows was held invalid in Linville v. Milberger, 29 F. (2d) 610. As to such use of the implement, Judge McDermott said (p. 617):

'but, no one, I believe, can read the evidence of these seventeen persons, with their wealth of homely methods of fixing the dates with checks and bank records supporting the story, with different witnesses identifying one part of the plow he had fixed and another witness another part and have any vagrant suspicions that they are perjurers. In short, the evidence meets the exacting standards required and is supported by the appearance of the plow itself'."

This last case was affirmed by the Court of Appeals of the 10th Circuit, 34 F. (2d) 390 (1939), and in the opinion of Judge Phillips repeats with approval the above language as to prior use establishing the defense of invalidity.
[fol. 1169] Plaintiff urges that the pistons of the patents in suit are for use on pleasure cars and that Monckmeier's use on a racing car was simply an experimental use. The Supreme Court did not accept such a view in the famous corset case, Egbert v. Lippmann, 104 U. S. 333 (1881), where only the fiancee of the inventor had used the device and this was more than two years prior to the application, which the court held to be a use and not an experiment.

Plaintiff urges that the use by Monckmeier amounted to nothing more than an abandoned experiment; that the Monckmeier use of pistons in 1911 is not to be considered an abandoned experiment is established in Buser v. Novelty Tufting Machine Co., 151 Fed. 478 (6 C. C. A., 1907), where a small tufting machine had been used prior to 1886, was not used in 1886 and 1887 when the 2-year period began to run; the court held that it was immaterial whether it was used until during the eleven year period before the patent was applied for. If once used as a completed invention, that is enough in distinguishing between the public use of the statute and abandoned experiment, Judge Cochrane says, p. 492:

"These two things are entirely distinct, and in argument the distinction between them is not clearly noted. In order that it may be, we will consider them one at a time in relation to said position. An abandoned experiment is an experiment that has been abandoned. As a mere experiment

never amounts to anticipation, the epithet abandoned here is unnecessary. What constitutes an experiment is indicated by the language of Mr. Justice Swayne in the case of Coffin v. Ogden, 18 Wall. 120, 21 L. Ed. 821:

'The invention or discovery relied on as a defense must have been complete and capable of producing the results sought to be accomplished. If the thing were embryotic or inchoate, if it rested in speculation or experiment, if the process pursued for its development had failed to reach the point of consummation, it cannot avail to defeat a patent founded upon a discovery or invention which was completed, while in the other case there was only progress, however near that progress may have been approximated to the end in view. The law requires, not conjecture, but certainty. If the question relate to a machine as thus exhibited, the [fol. 1170] conception must have been clothed in substantial forms, which demonstrate at once its practical efficiency and utility.' "

And again:

" 'Until his work is done, the invention gives nothing to the public.'

"If, however, the machine or other thing is complete, and capable of producing the result sought to be accomplished, it has passed the experimental stage and becomes an invention; and, in order that it may constitute an anticipation, it is immaterial how well it becomes known or how much it is used."

Where a device was only used for two and one-half months this was sufficient "public use" to bar the grant of a patent to another filed more than two years later, Brush v. Condit, 132 U. S. 39 (1889) where one clamp and lamp device had been used in work in a mill at night, in and out of doors. Such use was not experimental, and Mr. Justice Blatchford said, p. 47, it did not seem to be for the purpose of testing the machine, of calling attention to its qualities or of gratifying curiosity, but was used to furnish light to workmen. Here Monckmeier used his piston in a car used to win races, for which he was paid money.

Even a limited use of a device is sufficient to bar a patent, as Judge Tuttle said in Eclipse Interchangeable Counter-

bore Co. v. Gairing Tool Co., 33 F. (2d) 942 (1929), at p. 943:

"What was done at Mansfield was not published, was not patented, and the amount that it helped the world, of course, was pretty limited. But so long as I find, as I do, beyond a reasonable doubt, that it was done, that it was used, and with mechanical success sufficient to bring it into the art, I am forced to consider it."

Plaintiff also urges that the Monckmeier pistons, constructed and slotted as shown in the exhibits, would not operate to satisfaction in the present day automobile, and of course no piston does that. The piston of the Gulick patent did not, nor would the Gulick 1911 and 1913 pistons, but what was embodied by Monckmeier and by Gulick in the 1911 and 1914 pistons is now open to the public, even if old devices might now seem impracticable. They must [fol. 1171] be considered a prior public use of what they actually embody, regardless of their efficiency, if used in this day. The same question was before the Court of Appeals in Motor Improvements, Inc. v. General Motors Corp., 49 F. (2d) 543 (1931), also involving some five patents on purolator or oil filtering devices, where it was established that the old Royal Tourist car used an oil filter which was described as impracticable, still it was a prior use of oil distributing pipes and of undoubted efficiency, which feature Judge Mack held was good and constituted a bar to a subsequent patent on that particular feature. In the same way the T-slot expedient broadly claimed to be covered by the Gulick patent, was used not only by Gulick but by Monckmeier and Schoengarth more than two years before Gulick's application. To the same effect on this point is Eclipse v. Gairing Tool Co., supra, and Kil-Nock v. Chicago Plating Co., 10 F. (2d) 536 (D. C. Ill 1926), where Judge Lindley says, at p. 538:

"When it clearly appears that a prior device is in all essentials the device of the patent, and in fact accomplished practical work and was put to ordinary use, anticipation is made out, though the anticipatory device did not operate as perfectly as that of the patent, and was not long kept in use. Brush v. Condit (1889), 10 S. Ct. 1, 132 U. S. 39, 33 L. Ed. 251; Id. (C. C. 1884) 20 Fed. 826."

Plaintiff urges the precedent of several cases in which the evidence of prior use has been held insufficient and sets up a yardstick as to how the proof in this case should be measured. The authorities offered present not an instance where the alleged device alleged to have been in use is offered in evidence by the prior user. In United Shoe Machinery Corp. v. Day Wood Heel Co., 46 F. (2d) 897 (C. C. A. 6, 1931), and also Union Trust Co. v. White Motor Co., 22 F. (2d) 816 (1927), although there was a signed and dated drawing, Judge Westenhaver pointed out that the other circumstances of the proof were such as to cast doubts upon the integrity of the drawings but also of the witnesses; and in Universal Rim Co. v. Firestone Steel Products Co., 289 Fed. 884 (1923) urged by plaintiff, only oral evidence was submitted.

On the other hand, there is Open Hearth Steel Furnace Co. v. Youngstown Sheet & Tube Co., 2 F. (2d) 94 (1924), where there was testimony of several prior uses at different [fol. 1172] places, and Judge Westenhaver said, p. 97, "even if they are to be regarded as abandoned experiments rather than discontinued inventions, they should not be denied a place in the open hearth furnace art; each will be considered as a part thereof." Such situation is quite comparable to the facts of the present case, where the T-slot expedient has been shown to have been used by many persons other than Gulick, and including Monckmeier, Schoengarth, Long and others, working independently and all resorting to the same expedient upon encountering expansion difficulties in their pistons.

Schoengarth Pistons

Defendants offered in evidence the Schoengarth pistons, urging that this showed (1) the public use of that piston for two years prior to Gulick; (2) another use of the old T-slot expedient more than two years prior to the Gulick amendment of September, 1922; (3) how another mechanic put an adjusting device on a piston with a T-slot or left it off, depending upon the character of the cylinder; and (4) another instance of intervening rights years prior to the said amendment.

Schoengarth, patentee of No. 1,174,092, testified to the use of the expedient of T-wise splitting the skirt of a piston. He installed four pistons in a Ford truck in the spring of

1915 before writing to his patent attorneys on May 4, 1915. At that time he also made the drawing (Ex. 5-K-2) and the pistons were made and sold prior thereto. Before November, 1915, he replaced one of the original pistons sold with an oversize piston provided with a T-slot and without the adjusting device. Thereafter, he made pistons with a somewhat different adjusting mechanism, sold sets of pistons like Ex. 5-K-10 before March 26, 1917, which date is fixed by correspondence with his patent attorneys, the pistons operated until 1925.

Following Schoengarth's appearance as a witness an adjournment was had, and defendants' counsel stated that he would call Charles Garland, a mechanic who had worked with Schoengarth on the installation of his pistons in 1915, who was then too sick to appear to testify. Death overtook Garland before he testified, and Schoengarth testified that Garland had been interviewed by plaintiff's counsel during the recess. Any criticism of Schoengarth's testimony is hardly to be seriously considered since plaintiff's counsel have offered nothing to contradict his story, apparently given in good faith.

[fol. 1173] Schoengarth did not attempt to cover the T-slot expedient in his patent, so that feature became abandoned by him to the public. His testimony is clear that the T-slot expedient was in the set of pistons sold in the spring of 1915 and should constitute a bar to the claims of the Gulick patent directed to this feature. There is the further Schoengarth piston (Ex. 5-K-10) embodying arrangement of the T-slot with the head diameter extending down and overlapping the horizontal slot, which construction seems to constitute a reduction to practice and actual use of pistons. Further, as defendants urge, if the Schoengarth pistons are not sufficient to constitute a public use, his testimony and his patent application constitute intervening rights which should be an equitable estoppel as against this plaintiff.

Gulick and his counsel overlooked Schoengarth, or must have thought he would not show up for they diligently proceeded to antedate the Schoengarth patent by the affidavit under Rule 75 (Ex. 4-L, p. 1859), which, if not untruthful, at least misled the Patent Office. The presence of the adjusting mechanism in the Schoengarth pistons seems to be immaterial so far as this case is concerned for the T-slot,

either with or without the adjusting mechanism, operates the same, that is, permits expansion and contraction of the skirt. If no one before had suggested a flexible piston it might be a different situation, but this had been suggested by Franquist in 1914, Rainforth in 1912 and Serex in 1911 and 1912, followed by Long, Spillman, Hives and even by Jardine and Maynard; and Plaintiff accepted the ruling of the Patent Office that Ebbs did the same thing in 1902.

Plaintiff urges that there was only one witness produced to prove the use of the Schoengarth pistons. However, the fact that only one witness was produced does not alone justify a court in refusing to consider the subject of the testimony. In Corona Cord Tire v. Dovan Corp., 276 U. S. 358 (1928), the Supreme Court accepted the uncorroborated testimony of a Dr. Kratz on the subject of a sale of 300 inner tubes, which was supported only by records of the order, and Mr. Chief Justice Taft said, p. 382:

"It was not unnatural that with a small amount of D. P. G. he should try it in a special order of this kind from which he might confirm the conclusion he had already reached. The effort to disprove it was vague and inconclusive, which, it is only fair to say, was to be expected five years after the event."

[fol. 1174] The same can be said of Schoengarth for he had demonstrated the utility of the T-slot in the pistons of his patent, and it was, therefore, "not unnatural" that he should slit and install an oversize piston which did not require the adjusting means to keep it expanded. The testimony of one witness was also accepted as proof of the completion of an invention in Armstrong v. De Forest Radio Telephone & Telegraph Co., 280 Fed. 584 (1922), where on p. 590 Judge Manton of the 2nd Circuit says:

"There is no reason to doubt the testimony of the patentee as to the date of his inventive thought. While it is true that uncorrobated testimony of an inventor is to be accepted with caution (Clark Thread Co. v. Williamantic Linen Co., 140 U. S. 481, 11 Sup. Ct. 846, 35 L. Ed. 521), yet there is no rule of law that requires the rejection of the uncorroborated testimony of an inventor as to the date of his conception. The court must be satisfied as to the fact of demonstration and that the conception was complete."

Long Pistons.

Defendants offered in evidence the Long pistons, and urge that these showed intervening rights, and examples of the expedients of the T-slot, but as against Jardine and Maynard, Long is offered for all purposes.

The Long pistons, patent Nos. 1,395,441, 1,489,499 and 1,872,772, are pleaded as a prior use (Def. Ex. 4-H), and exemplifications of the Long 6-slotted pistons are Defendants' Exs. E, F, G and R. Long submitted pistons to Franklin Manufacturing Company as early as March, 1916, as was also shown in interference proceedings, and on appeal in Hartog v. Long, 47 F. (2d) 369 (1931), the court says, at p. 370:

"Louis M. Stellman, a witness whose testimony displays an intelligent grasp of the situation, and who was, at that time, chief engineer of the Franklin Manufacturing Company, testifies that in the early part of the year 1916 he talked with Long, and that Long displayed to him and others a piston of the type in question and which, according to his testimony, may be read plainly upon the second count of the interference."

As against the Gulick patent it is urged that the Long pistons constitute adverse rights to the expansion of the [fol. 1175] Gulick application years after the Long pistons had gone into commercial use. These Long pistons illustrate the embodiment of the common T-slot expedient.

As against Jardine and Maynard it is urged that the Long pistons operate with full force and effect from the standpoint both of anticipation and lack of invention. It cannot be said that the Long pistons were impractical, for they were used in the air-cooled Franklin engine where pistons operate under the most adverse conditions.

The Long pistons, with the increase of engine speeds, went out of use in Franklin in 1926, plaintiff claims because the Long pistons scored at the junction of the webs with the skirt. This would have happened to Gulick, as well as to Jardine, neither of which patents was ever put into use, and the same thing happened to Maynard when it was attempted to use that patent structure. That the Long pistons went out of use seems to be immaterial.

Plaintiff urges that defendants' claim of intervening rights was disposed of by the case of Roos v. McMillan,

64 F. (2d) 568 (1933), "because Gulick disclosed and claimed broadly his piston from the beginning." Of course defendants' contention is that the Gulick claim was broadened in 1922 to cover something that he never had when filed, and if such view is adopted there is no pertinency in Roos v. McMillan, supra, as plaintiff contends.

Infringement.

For the reasons previously given, the patents in suit are held invalid, which particularly applies to the claims alleged to be infringed by the Sterling and Ray Day pistons. The order of reference is general, and to comply therewith there must be consideration of the question of infringement. If any or all of the patents, or all or any of the claims alleged to be infringed should be held to be valid, they must be strictly construed as not to be infringed.

If the Gulick and Jardine patents differentiate from the prior art at all, it is by the employment of flexible webs extending from the wrist pin bosses to the skirt, which the Ray Day piston does not have, and the proof is here that the Sterling piston (Ex. 1) does not have such flexible webs as contemplated by the patents. The other Sterling pistons have no webs. The Gulick patent is thus restricted to a structure in which flexible webs extend from the wrist pin bosses to the skirt and are surrounded by the skirt, while the Jardine patent is restricted to a slipper piston [fol. 1176] having flexible webs, and neither can comprehend a trunk piston with a dashed-in relief.

The Mooers patent is restricted to narrow connectors extending from the head flange to the bottom of the skirt, closely hugging the inside of the skirt so as to leave substantially 360 degrees separation. Sterling follows the Franquist patent and has from one-fourth to one-half isolation, that is through 90 to 180 degrees, with a connection between the head and the skirt in the region of the wrist pin bosses, made by heavy connectors as in Ex. 1, and extending for a quadrant. In Ray Day the connectors are from the head to the wrist pin bosses, requiring a sand core and are not from the head flange to the skirt permitting permanent molding.

The Schmiedeknecht patent is restricted to a construction in which each boss is supported at its end, with one end of the boss supported from the head, and the other end

supported from the web. In the Sterling piston (Ex. 1) each boss is supported at its center, the opposite of what is described and claimed in the Schmiedeknecht patent.

The Maynard patent is not infringed unless the webs are flexible and so described in that patent, but that must be due to a construction contemplated by that patent, as plaintiff's expert said this was necessary as far as Gulick and Jardine patents are concerned. In the Sterling piston (Ex. 1) compensation is not secured at the top by web flexibility, but by the Keystone relief; and thus on plaintiff's claim Ex. 1 departs from the Maynard patent.

None of defendants' pistons have such identity or correspondence of structure, function and mode of operation as contemplated by the patents in suit, and particularly is this true as to those patents which are restricted by the prior art.

Heretofore has been considered the situation where a defendant has followed the prior art, citing decisions of this Circuit following the leading case of McCormick v. Talcott, 61 U. S. 402, where Judge Grier said, p. 405:

"But if the invention claimed be itself but an improvement on a known machine by a mere change of form or combination of parts, the patentee cannot treat another as an infringer who has improved the original machine by use of a different form or combination performing the same functions. The inventor of the first improvement cannot [fol. 1177] invoke the doctrine of equivalents to suppress all other improvements which are not mere colorable invasions of the first."

To the same effect is Electric Signal Co. v. Hall Signal Co., 144 U. S. 87 (1885), where Mr. Justice Matthews says, at p. 96:

"But this result or idea is not monopolized by the patent. The thing patented is the particular means devised by the inventor by which that result is attained, leaving it open to any other inventor to accomplish the same result by other means. To constitute identity of invention and therefore infringement, not only must the result attained be the same, but in case the means used for its attainment is a combination of known elements, the elements in both cases must be the same, and combined in the same way, so that each element shall perform the same function, provided,

however, that the differences alleged are not merely colorable, according to the rule forbidding the use of known equivalents."

And again in Westinghouse v. Boyden Brake Co., 170 U. S. 537 (1898), Mr. Justice Brown says, at p. 569:

"* * * the alleged infringer must have done something more than reach the same result. He must have reached it by substantially the same or similar means, or the rule that the function of a machine cannot be patented is of no practical value."

And after pointing out that "a charge of infringement is sometimes made out though the letter of the claims be avoided," he also says, p. 568:

"The converse is equally true. The patentee may bring the defendant within the letter of his claims, but if the latter has so far changed the principle of the device that the claims of the patent, literally construed, have ceased to represent his actual invention, he is as little subject to be adjudged an infringer as one who has violated the letter of a statute has to be convicted when he has done nothing in conflict with its spirit and intent."

The rule of Railway v. Sayles Co., 97 U. S. 554 (1878), has been continuously followed in this Circuit, as follows, p. 556-7:

"But if the advance toward the thing desired is gradual, and proceeds step by step, so that no one can claim the [fol. 1178] complete whole, then each is entitled only to the specific form of device which he produces, and every other inventor is entitled to his own specific form, so long as it differs from those of his competitors, and does not include theirs."

The court, in I. T. S. Rubber Co. v. Essex Co., 272 U. S. 427 (1926), decided that as to a claim which does not include on its face a limitation obviously intended, says, p. 442:

"* * * we are of opinion that the claim should be construed and have the same effect as if it had been included. This is not in any real sense, a remaking of the claim; but is merely giving to it the meaning which was intended by the applicant and understood by the examiner."

And, at p. 444:

"So where an applicant whose claim is rejected on reference to a prior patent, without objection or appeal, voluntarily restricts himself by an amendment of his claim to a specific structure, having thus narrowed his claim in order to obtain a patent, he 'may not by construction, or by resort to the doctrine of equivalents, give to the claim the larger scope which it might have had without the amendments which amount to a disclaimer.' Weber Elec. Co. v. Freeman Elec. Co., 256 U. S. 668, 677."

In this Circuit the courts have had these questions before them on many occasions. In Lektophone Corp. v. Crosley Radio Corp., 46 F. (2d) 126 (D. C. Ohio, 1928), Judge Hickenlooper, while District Judge, said, p. 130:

"The defendant has done no more than to draw from the prior art, albeit including Hopkins, the various elements, themselves, all old, which accomplish to a material extent the desired results which it is claimed Hopkins accomplished, but by a combination of elements differing radically from the Hopkins combination in at least this one respect."

"Hopkins nowhere taught the necessity of, or claimed as an element of his invention, means for restricting the edge of the cone against deformation. This was an incidental or accidental function of his annular rim, but there are many ways of accomplishing the same result. Hopkins chose one; the defendant another. So long as the defend- [fol. 1179] ant's means of accomplishing the desired result is not merely the substitution of the mechanical equivalent for that of Hopkins, there can be no infringement."

In view of the fact that defendants' pistons approach the prior art as much if not closer than they do the pistons in suit, this case is quite in point, notwithstanding plaintiff's urge that the differences are only equivalent combinations. Such differences are shown by the means to secure compensation for expansion at the top of the skirt of the Sterling piston, and also in the Ray Day piston are different than the patents claim. Even in the Sterling piston (Ex. 1) which is said to have flexible webs but has none, the compensation at the top is secured by the Keystone relief which is unknown to Gulick, Jardine and even Maynard if the Maynard patent is a modified Jardine structure.

In Fowler v. Detroit Bedding Co., 47 F. (2d) 752 (1931), in a Per Curiam decision, the court said, at p. 752:

"If the patent is valid (which we need not decide), the invention consists in so tapering and overlapping the ends of the bat that when it is folded about the core a bandage of uniform thickness results, or in the simplicity with which the bandage is manufactured, by merely tapering the ends of the bat before folding it."

Although the claim in that case was restricted to "tapered edges lapped on one side of the paper core," the contention was the defendant infringed because the claims could be read upon defendant's structure. The court, however, says, p. 752-3:

"Any slight tapering of the edges was not due to design, but was incidental to the manner in which the sheet or bat of the material came from the machine or to the effect of forcing it into the pleat of the cushion."

In Directoplate Corp. v. Donaldson Lithographing Co., 51 F. (2d) 199 (1931), Judge Hickenlooper refers, as in other cases (p. 202) "to a specific construction of clearly defined elements all pertaining to the inventive step as he then understood it."

"Further than this, the defendant's device utilizes the forces of nature and operates in a manner substantially different from the device of the patent. The 'Bearing sec- [fol. 1180] tion' of the claim, as a separate unit unattached to negative or positioning frame, for so the claim must b construed in view of the specification, is wholly absent. So also are the practically unlimited play of the inner sealing strip upon the negative, the flange of the positioning section, and the function of the bearing section in horizontally bridging the gap between the negative and the positioning section. Elements of the claim are omitted, but more than this, the manner of operation of the two devices, we are convinced, is substantially different. If this be so the defendant's device does not infringe."

Again in Goodyear Tire & Rubber Co. v. India Rubber Tire Co., 51 F. (2d) 204 (1931), in considering the status of the patent in view of the prior art, Judge Hickenlooper said, p. 206:

"Here, the crowded condition of the patent art, the closely analogous uses by others (even if they be not regarded as anticipations), the nature of the disclosure, the very essence of the alleged inventive step, and the Patent Office proceedings, involving a possible estoppel, all limit the appellee to a breaker-strip of layers of parallel cords 'interposed between the tread and the cushion,' as provided in the claim and under principles more fully discussed in our opinion in Directoplate Corp. v. Donaldson Lithographing Co., 51 F. (2d) 199, this day decided."

To the same effect is Willett Mfg. Co. v. Root Spring Scraper Co., 55 F. (2d) 858 (C. C. A. 6, 1932); Ottinger v. Ferro Stamping & Mfg. Co., 59 F. (2d) 640 (1932), decisions also by Judge Hickenlooper; and there is the very recent case of Chicago Forging & Mfg. Co. v. Bade, Cummings Mfg. Co., 63 F. (2d) 928 (1933), where Judge Simons says, p. 930:

"The defendant's device (see illustration), lacks the opposing inclined surface which we regard as necessary elements of the claim if it is to be considered as supported by the disclosure."

"Obviously, and this was recognized by plaintiff's expert, the patentee was not entitled to claim all structures which exercised the desired function, but only those which he himself invented, and a device which produces the same result through translation of force operates in a substantially different manner than one in which force is directly applied."

[fol. 1181] Plaintiff urges that a different rule was followed by the Court of Appeals in Byers Machine Co. v. Keystone Driller, 44 Fed. 283 (C. A. 6, 1930), where the patents on a trench digging machine were held valid and infringed, but that case is clearly to be distinguished, for there the court said, p. 285, "that Clutter was a pioneer in this particular form or type of trench digging machine, and that claim 4 is entitled to a broad construction," which is quite different from the case presented at bar.

In Remington Rand, Inc., v. General Fireproofing, Equity No. 3441, before this court, it was said, p. 16:

"These inventors entered an already crowded art, so that at the time the application was made for their patent, only improvements could be patented by them."

And further, at p. 22:

"The rule is, that where the patent does not embody a primary invention but only an improvement to the prior art, and the defendant's machines can be differentiated, the charge of infringement is not sustained."

And again, in Cleveland Tractor Co. v. International Harvester, Equity No. 3360, it was held that claims must be construed not only in the light of the specification, but in light of the proceedings of the Patent Office, and it was said, at p. 23:

"The rule of patent law is well established that the claims must be construed in the light of the specifications and drawings. Defendants cite Computing Scale Co. of America v. Automatic Scale Co., 204 U. S. 609, in which there was read into a broad claim for 'mechanism' for doing a certain thing, the particular construction of such mechanism defined in the specification, in order to distinguish the invention from the prior art."

The listing of the Gulick patent as a pioneer patent, Jardine and Maynard as improvements which accomplish the useful purpose in a successful commercial form, and the Mooers and Schmiedeknecht patents as patents which contribute to the utility and commercialization of that prior invention, is not justified on the record in this case. When it comes to infringement, the use of the Keystone relief in the Sterling piston (Ex. 1) compensates for expansion at the top where it is required, as distinguished from making [fol. 1182] the webs flexible, and as to prior art, the mechanic had all the expedients at his command which he would naturally employ, and of this the Supreme Court says, in Webster Loom Co. v. Higgins, 105 U. S. 580 (1881), Mr. Justice Bradley saying, at p. 586:

"He may begin at the point where his invention begins, and describe what he has made that is new, and what it replaces of the old. That which is common and well known is as if it were written out in the patent and delineated in the drawings."

Resort to "Symptoms of Invention" So-called, Unnecessary for Such Not Here Controlling

Plaintiff urges on behalf of the validity of these patents several arguments or claims which might be called "symp-

toms of invention." These are the long-felt want, prior efforts and failures, public adoption, public acquiescence and commercial success. The weight to be given such "symptoms of invention" in passing on patent validity is well settled. They are important and entitled to weight only when question of validity is doubtful.

Defendants answer that aluminum pistons were not needed until the recent developments of high speed automobile engines, and cite that even now one large manufacturer, General Motors Corporation, still uses iron piston; and there is also what Long showed in the making of aluminum pistons, with its beginnings in 1915-17.

Commercial Acceptance

The situation here is peculiar, for the structures of none of the pistons in suit have ever gone into commercial use. That of Schmiedeknecht, Mooers, Gulick and Jardine not at all, while as to the Maynard design, the proof is that it was not used successfully until it had been provided with the Keystone relief. Particularly as to the Maynard piston it was discarded by Chrysler, an unwilling party plaintiff which has the right to its use as a half-owner of the patent.

Sales alone are not a test of patentability. In the early case of McClain v. Ortmayer, 141 U. S. 419 (1891), Mr. Justice Brown says, p. 428:

"If the generality of sales were made the test of patentability, it would result that a person by securing a patent upon some trifling variation from previously known methods [fol. 1183] might, by energy in pushing his goods drive competitors out of the market and secure a practical monopoly, without in fact having made the slightest contribution of value to the useful arts."

The plan of plaintiff and its licensees has been to control the market in the manufacture of aluminum pistons, and former competitors Bohn Aluminum & Brass and Kant-Skore became sub and collateral licensees. The statement is made that a settlement was made with Long, who had been a competitor, and although the terms do not appear in this case, such fact is admitted in plaintiff's reply brief, p. 160.

The language of Mr. Justice Stone in the recent Radio case of De Forest v. General Electric, 283 U. S. 664 (1931) is in point, where he says, p. 685:

"Only when invention is in doubt may advance made in the art be thrown in the scale to support it. If we were to assume that invention here was doubtful, we can find little to suggest that the high vacuum tube when produced satisfied a long felt want or that its present utility is indicative of anything more than the natural development of an art which has passed from infancy to its present maturity since Langmuir filed his application. There was little or no practical use for a high vacuum tube in 1913. The De Forest audion was not in general use and Langmuir did not see one until that year."

That was also a case where the application filed in 1913 issued some 12 years later in 1925, and it was held that no single element was broadly novel in the assemblage of elements making up the device defined in the issue.

The Court of Appeals of this Circuit had adopted the same view in Jackson Skirt & Novelty Co. v. Rosenbaum, 225 Fed. 331 (1915), and in Winton Motor Carriage Co. v. Lindsay Auto Parts Co., 239 Fed. 521 (1917), where the specific design of the patent structure never was successful and did not become successful until redesigned with improvements added, and of this Judge Denison says, on the question of commercial success, p. 527:

"* * * but there is slight room to infer that its commercial acceptance was due to the merits of this particular patent rather than of the other patents and improvements which it embodied, and still less to attribute its commer-[fol. 1184] cial success to the comparatively minor structural detail, viz. the peculiar sectional casing, without which it would not have responded at all to the two claims in suit. The commercial success of this Timken axle throws no light on the validity of this claim."

Also, the late Judge Westenhaver commented on the fact that "sales are due to the growth of industry and trade conditions and in no wise to the specific contribution," in Troy Wagon Works v. Ohio Trailer, 264 Fed. 347 (D. C. Ohio, 1920). In other Circuits there is Haggerty v. Rawlings Mfg. Co., 14 F. (2d) 928 (C. C. A. 8, 1926), and in Fleischman Yeast Co. v. Federal Yeast Co., 8 F. (2d) 186 (D. C. 1925), affirmed 13 F. (2d) 570 (C. C. A. 3, 1926), Judge Soper said, p. 199:

"Commercial success of a patented article is not persuasive evidence of invention as to a claim which covers only

a part of the device or process, and, when it is shown that the claim in controversy does not cover the whole of the patented device or process, the weight of such evidence is very much reduced."

Such statement is pertinent here, for the patents formerly relied upon were the Spillman & Mooers and Franquist patents which expire in 1931 and 1932 respectively.

Acquiescence

The various consent and default decrees on some of the patents in suit cannot help the plaintiff in this proceedings; nor is plaintiff helped by the fact that other suits are pending against Chrysler and Ray Day for the mere filing of a suit is only the assertion of the claim.

Until their expiration, plaintiff could rely upon the Spillman & Mooers and Franquist patents, and that piston manufacturers did not contest is no criterion of validity, for even the value and general use of a device will not sustain a patent if the lack of invention is clear. Of a situation not unlike that presented here, with the trustee owning many piston patents, Mr. Justice Holmes of the Supreme Court, in the recent Mineral Separation v. Magma Copper, 280 U. S. 400 (1930), says at p. 404:

"The petitioner adverts to the success that has attended the later patent and to the fact that the world waited until it appeared. But interlopers naturally would be slow to venture into the field occupied by a powerful company [fol. 1185] armed with patent No. 835,120 and supported by a subtle ingenuity that we cannot doubt would have been exercised with even more effect to show that a process like that in No. 962,678 was an infringement than it now is to prove that the later patent was a revelation that transformed the art."

Prior Art Not Cited in the Answer

Over plaintiff's objection, there were offered in evidence several patents, publications and prior uses which were not cited in the answer. These included the patents to Howe, Leitzenmayer, Roots British, Serex French, Hartog and Pomeroy, articles by Ricardo in "The Automobile Engineer," by Gunn, Engineer of Packard, in "Automotive Industry," articles in "Automobile" of March 5th and

March 12th, 1914, articles in "Horseless Age" of April 8, 1914, and December 24, 1913, the public and prior use by Monckmeier and Schoengarth, and sales by Schoengarth. As to Schoengarth, plaintiff later consented to an amendment to the answer.

Such patents, publications and prior uses constitute evidence of prior invention unless Gulick establishes an earlier date of invention, and the evidence offered seemed to be good references under R. S. 4920. The prior invention and not the patents which have been issued to such inventors constitute the defense as authorized in the second paragraph of the statute, and such defense is pleaded in the answer.

The rule is that notice need not be given prior to trial, of patents or other defenses to be introduced for the purpose of showing the prior art to demonstrate the lack of invention as distinguished from anticipation, Grier v. Wilt, 120 U. S. 412 (1887); Graham Paper Co. v. International Paper Co., 46 F. (2d) 881 (C. C. A. 8, 1931). The reason for such rule is pointed out by Judge Stone in Zip Mfg. Co. v. Pusch, 2 F. (2d) 828 (C. C. A. 8, 1924), where he says at p. 830:

"The purpose of the statute is to prevent surprise in the evidence by giving the plaintiff thirty days notice of the particular patents and usage which will be relied upon in the challenge of the patent. Obviously, where the plaintiff must know of such instances, this notice serves no purpose. Such was the case of Brown v. Piper, cited above, [fol. 1186] where prior usage was of such nature that the court took judicial notice thereof. It would seem to be an even clearer occasion for applying the same reasoning where the usage relied on is shown, in the language of the very patent in suit, to have been known to the plaintiff at that time. We think, therefore, that the trial court was right in considering, on the point of validity, the clear statement in this patent that grinding mixtures, employing oil as a 'binder,' were known to the art and that the improvement claimed was a change in the 'binder' from oil to starch."

The Pomeroy and Hartog patents in question are owned by the trustee plaintiff as shown in its prima facie case, and the Hartog patent was in Interference with Gulick.

The Howe patent and the Hives British patent were cited by the Patent Office against the Maynard patent and the Schoengarth patent were also cited during the prosecution of the Gulick application and antidated Gulick. The Kant-Skore piston was known to plaintiff as it was manufactured by its licensee. None of these came as a surprise to plaintiff.

The particular pistons specified in the Bill of Complaint were the Sterling pistons Ex. 1 and the Ray Day piston Ex. 8. As the trial progressed, plaintiff's expert brought into the case five Sterling pistons and another Ray Day piston, asserting the five to be within the scope of Gulick, three within the scope of Jardine, three within the scope of Maynard and four within the scope of Mooers. Following this came the offer of proof of the 1911 and 1914 Gulick pistons, and only late in the trial would plaintiff's counsel state its position as to whether the 1911 and 1914 pistons came within the scope of the Gulick patent. Having thus modified the issues, consideration of the Monckmeier piston seemed proper on the question of validity, and the same might be said to apply to the Serex French patents.

There is another view which justifies the consideration of the Monckmeier pistons and the Serex patent piston on the question of validity, and that is from a standpoint of a well-known expedient of slotting the pistons through and through, and particularly by the T-slot. Such slotting was shown in the patents in Ebbs, Van Bever, Schoengarth, Vincent, Spillman, Long, Rainforth, Hives, Hartog, and now by Monckmeier and Serex, i. e., from Ebbs in 1902 to Hives in 1920. Thus the T-slot was known over this [fol. 1187] period, and it seemed proper to receive evidence of additional instances of its notoriety without previous notice or in the answer; and this under the decisions of the court construing R. S. 4920, as was also done in Cleveland Tractor v. International Harvester, supra.

This practice is authorized by the rule as announced in Elliott & Co. v. Youngstown Car Mfg. Co., 181 Fed. 345 (C. C. A. 3, 1910), by Judge Archbald, at p. 349:

"The fact that so many persons caught the idea goes rather to prove that it was simple and obvious, and not that it required inventive genius to conceive. It is not like the case where the art is waiting for the device, and inventors

striving unsuccessfully to produce it, under which circumstances invention may well be held to appear."

Cited with approval by Judge Killits of this District in Phoenix Knitting Mill v. Rich, 194 Fed. 721 (1911), Frezzey v. Bemis Bros. Bag Co., 1 F. (2d) 116 (C. C. A. 8, 1924); and Judge Westenhaver took the same view in Open Hearth Furnace v. Youngstown Sheet & Tube Co., 2 F. (2d) 94 (1924), where there were a number of prior uses of the patent at different places.

The evidence of both the Monckmeier use and the Serex French patent can be here used to restrict the claims of all the patents in suit, particularly in view of plaintiff's insistence that the ordinary trunk piston provided with a relief and a T-slot, both known in the art, come within the scope of the patents in suit.

Alleged Copying by Defendants

Plaintiff places much stress on the fact that the Sterling piston (Ex. 1) looks like that being sold by its licensees, although this can hardly be said of the other Sterling pistons and certainly not of the Ray Day pistons. As to this Sterling piston, the recent statement in Bettendorf Co. v. Ohio Steel Foundry, 56 F. (2d) 777 (C. C. A. 6, 1932), by Judge Hickenlooper, seems to be in point, at p. 779:

"Clearly, if the claims as stated fail to disclose a patentable invention, no license is required, the device may be made and used by any one."

The mere copying of a device put on the market by plaintiff is not actionable unless a defendant palms off its goods [fol. 1188] as those of plaintiff, and there is no evidence of that; also there is no allegation of unfair competition and plaintiff is not a manufacturer.

The defendants have not copied the structure of any of the patents in suit, not even that of Maynard, for a characteristic feature of Ex. 1 is the Keystone relief furnishing compensation at the top of the skirt, and compensation at the bottom being secured in the way long known to the art by splitting the piston skirt from the bottom up. Should plaintiff answer at the defendants are estopped to deny the utility of the Maynard piston without the Keystone relief and in spite of modification of Maynard as used, on this

question of utility there is the statement in Sandy MacGregor Co. v. Vaco Grip Co., 2 F. (2d) 655 (1924), where Judge Denison says, at p. 656:

"Sufficient practical utility to make a device 'useful,' in the sense of the patent statute, is, we suppose, what is meant by the cases which say that an infringing defendant is estopped to deny utility. The phrase 'patentable utility' is sometimes perhaps rather inaccurately used to denote the function of being useful plus the skill of the inventor as distinguished from that of the mechanic. Of course, the infringer is not estopped to deny patentable utility in this sense, because if he were he could never dispute patentability."

And this view of the Court of Appeals was followed in Seymour v. Ford Motor, 44 F. (2d) 306 (C. C. A. 6, 1930).

Consideration has been given to all the issues, and there has been omitted from this report any discussion as to the efforts of plaintiff or The Aluminum Company of America to establish and control a monopoly in the manufacture of aluminum pistons. Defendants earnestly urge this to be a vicious monopoly, but that question is not here for discussion, and even if it were here, a disposition of such question has been made unnecessary by the findings of invalidity and non-infringement.

The Master reports that on the 30th day of December, 1933, he handed draft copies of this report to counsel and asked that errors and corrections to be made be pointed out by counsel by January 15, 1934, that the Master might consider and make such corrections insofar as the Master believes proper and in keeping with the views as expressed in this report. Such suggestions have been received and cor- [fol. 1189] rections made in the report. Two copies of this report have been furnished to counsel for each party.

Herewith I hand up for your Honors the following:

(1) Original files and papers from the Clerk of the Court in the three cases.

(2) Stipulations.

(3) Transcript of testimony, together with 134 Plaintiff's Exhibits and 91 Defendants' Exhibits.

(4) Briefs of counsel.

(5) Suggested findings of fact and conclusions of law submitted by counsel.

(6) Report of Special Master.

Respectfully submitted, Wm. B. Woods, Special Master.

January 27, 1934.

Copies to:

Evans & McCoy, Wm. C. McCoy, Of Counsel, 724 Bulkley Bldg., Cleveland, Richey & Watts, F. O. Richey, Of Counsel, 1490 Union Trust Bldg., Cleveland, Andrews, Hadden & Burton, Harold H. Burton, Of Counsel, 1882 Union Trust Bldg., Cleveland, Counsel for Plaintiff.

John H. Bruninga, and John H. Sutherland, Of Counsel, 2119 Railway Exchange Bldg., St. Louis, Kwis, Hudson & Kent, 870 Union Trust Bldg., Cleveland, Counsel for Defendants.

[fol. 1190] In United States District Court

Plaintiffs' Exceptions to the Report of the Special Master

Filed February 26, 1934

[Case No. 4045]

Now come the plaintiffs and file this, their objections and exceptions to the findings, conclusions and report of the Hon. William B. Woods, Special Master, filed January 27, 1934, as follows:*

---

* The following authorities have been relied upon for the form and manner of the exceptions taken herein:

Harding v. Handy et al., 11 Wheaton, 103, 6 L. Ed. 429; Sheffield v. Gordon, 151 U. S. 285, 38 L. Ed. 164; Sandford v. Embry, 151 Fed. 977, 982 (C. C. A. 6th); Columbus etc. Ry. Appeals, 109 Fed. 180, 219 (C. C. A. 6th); Savage v. Monarch, 64 Fed. 2d 650, 651 (C. C. A. 10th); Thomson v. Sternberg, 55 Fed. 2d, 715, 716 (D. C. Ill.); Fordyce v. Omaha, 145 Fed. 544, 557 (C. C. Mo.).

Exception No. 1

Plaintiffs object and except to the Master's Finding of Fact No. 11 (M. R. p. 1098) and to each of the following statements and conclusions thereof:

(a) "That the pistons of the Gulick patent embodies the fundamental structure of the Franquist patent No. 1,-153,902"

as contrary to the evidence; see the testimony of Defendants' witnesses Stellman R. pp. 536, 553, 554 and 567, Dorris R. pp. 1078 and 1079, Jeffries, made defendants' witness on cross examination exceeding direct, over plaintiffs' objection, R. pp. 175 to 178, and plaintiffs' witness Jeffries R. pp. 201 to 203, 248, 942, 943 to 945 and 952; and see defendants' Exhibit 3-Q, piston made in accordance with the Franquist patent R. p. 178, and defendants' Exhibit 4-L, Gulick file wrapper, p. 1938 (citing Franquist patent); and as contrary to the evidence cited in support of Exception 3 hereof; and except and object to the statement:

(b) "and that the piston of the Franquist patent is operative to substantially compensate for expansion"

as contrary to the evidence; see evidence cited under "a", supra; and except and object to the statement and conclusion:

[fol. 1191] (c) "that the piston of the Gulick patent employs essentially the webs of the Spillman & Mooers patent No. 1,092,870 and of the Chenard & Walcker Patent No. 468,595"

as contrary to the evidence; see testimony of defendants' witness Stellman R. pp. 496 and 562, Jeffries, made defendants' witness on cross examination exceeding the direct over plaintiffs' objections R. pp. 161 to 167, plaintiffs' witness Jeffries R. pp. 195 to 197, 943 to 949, and see plaintiffs' Exhibits 84, 67c p. 1539 and defendants' Exhibit 4L, Gulick file wrapper, pp. 1843, 1849, 1936 and 1938, (citing Spillman and Mooers and Chenard and Walcker); and as contrary to the evidence cited in support of item (a), supra, and plaintiffs' Exception No. 3 post; and except and object to the statement and conclusion:

(d) "that the web construction of the Gulick patent differentiates from those of Spillman & Mooers and Chenard &

Walcker simply in matter of design involving mechanical skill"

as contrary to the evidence; see testimony of defendants' witness Stellman, Deposition R. p. 458, R. pp. 554, 555, 556 and 566, and contrary to the evidence cited in support of items (a) and (c) supra, and plaintiffs' Exception No. 3 post; and except and object to the statement and conclusion:

(e) "that splitting of the skirts of the Franquist, Spillman & Mooers and Chenard & Walcker patents by through slotting was within the purview of one skilled in the art."

as contrary to the evidence; see testimony of defendants' witnesses Stellman R. pp. 460 and 461, 538 to 541, 544, 545 to 547, 548, 554, 555, 562, 565, 567, 570 to 573, Dorris R. p. 1077, and also contrary to the evidence cited under items (a), (b), (c), and (d) supra and in Exception No. 3, post.

Exception No. 2

Plaintiffs further object and except to the failure of the Master to adopt items 1 and 2 of page 22 of plaintiffs' proposed Findings of Fact, sumarized briefly as follows:

That the piston described and claimed in Gulick patent, No. 1,815,733, in suit was based upon a new and original [fol. 1192] combination of elements that, coacting together, gave rise to a new mode of operation of the resulting piston structure, and the new combination of elements described in the Gulick patent and claimed in the claims in suit of the patent provided the first piston structure embodying these elements in combination and having the same mode of operation and accomplishing the results of the Gulick patented piston, and no prior art piston exhibited to the Court has the structure, mode of operation or accomplishes the results of the piston described and claimed in the Gulick patent in suit.

as shown by the evidence; see testimony of defendants' witness Stellman, R. pp. 554 and 566, and of plaintiffs' witness Jeffries R. pp. 188, 189, 195 to 202, 203, 204, 259 and 260, and as shown by the evidence cited in support of Exception No. 1, supra.

Exception No. 3

Plaintiffs further object and except to the failure of the Master to adopt items 1, 2, 3 and 4, pages 10 and 11, of

plaintiffs' proposed Findings of Fact, briefly summarized as follows:

(a) That long prior to November 1920 the beneficial properties of aluminum and aluminum alloys as a material for pistons and piston structures was well understood in the art;

as shown by the evidence; see testimony of defendants' witness Stellman, Deposition pp. 458, 459, 460, 463, Dorris R. p. 1078, and plaintiffs' witness Dr. Jeffries R. pp. 90, 91, 98 to 109; and

(b) that there existed a long felt want for such inventions which was long unsupplied;

see testimony of defendants' witnesses Stellman, Deposition R. pp. 458, 460, 480, 538 to 541, 545 to 548, Venner, R. p. 347, and plaintiffs' witness Jeffries R. pp. 67, 92, 145, 185 to 187; and

(c) that there were many prior efforts and failures to accomplish what the patentees accomplished by men of outstanding ability and experience and skill in the art;

[fol. 1193] see testimony of defendants' witnesses Stellman, Deposition R. pp. 460, 461, 463, 464, 466, 467 and R. pp. 545 to 548 and 587 to 590, Dorris R. pp. 1074, 1075, 1078, 1079 and 1080, plaintiffs' witnesses Jeffries, R. pp. 185, 205 to 206 and 936, Murphy R. pp. 657 and 662, and Burns R. p. 675; and

(d) that the problem of providing a satisfactory piston in either iron or aluminum was a very complex problem;

see testimony of defendants' witnesses Stellman, Deposition R. pp. 459, 460, 463, 469 and R. pp. 588 to 590, Dorris R. pp. 1066 to 1076, 1077, 1078 and 1081, and plaintiffs' witness Jeffries R. p. 64; and

(e) that when the inventions of the patents in suit were made known to the public they were generally and extensively adopted by the public, who, generally speaking, have acquiesced in the patents in suit;

see testimony of defendants' witness Stellman, Deposition R. pp. 461 and 462, 470 and 471, Dorris R. pp. 1073 and 1074, plaintiffs' witness Jeffries R. pp. 78, 126, 132, 135, 136,

955, 1050 and 1051, and see the license agreements plaintiffs' Exhibits 38, 39 and 40, and the piston royalty reports plaintiffs' Exhibit 13; and

(f) that automobile engines were redesigned to take advantage of aluminum pistons;

see testimony of defendants' witness Stellman, Deposition R. p. 466; and

(g) that there has been persistent infringement in the face of litigation and Sterling Products Corporation duplicated pistons made by plaintiffs' licensees and made a substantial duplicate of pistons shown in the Maynard patent, after having made efforts to produce a satisfactory piston along other lines,

see plaintiffs' Exhibits 10A, 11, 12 and 19, and testimony of defendants' witnesses Stellman, Deposition R. pp. 461, 462, 470 and 471 and Dorris R. pp. 1073 to 1074 and 2168; and

(h) that the form of piston shown in the Maynard patent with slight and immaterial changes has been the standard form of piston ever since 1920.

[fol. 1194] See testimony of defendants' witness Stellman, Deposition R. pp. 461, 462 and 470, and plaintiffs' witness Jeffries R. pp. 80 to 86, 126, 132, 135, 136, 955, 1050 and 1051.

Exception No. 4

Plaintiffs object and except to the following statements and conclusions in the Master's Finding of Fact No. 12 (M. R. p. 1098)

"That by admissions of plaintiffs' witness Gulick, Gulick abandoned and had in public use in this country during the year 1911, a piston exemplified by Exhibit 48, and during the year 1914, a piston exemplified by Exhibit 51;"

as contrary to the evidence; see testimony of plaintiffs' witness Gulick, R. pp. 731, 740, 741, 745 to 748, 754, 755, 756, 757, 758, 759, 761 and 805, and see defendants' Exhibit 4-L pp. 1842, 1859 to 1863, and 1952 to 1963 inclusive, and Interference decisions, plaintiffs' Exhibits 67C p. 1539, 69A p. 1550, 70A pp. 1566 and 1569, and 70B p. 1571.

Exception No. 5

Plaintiffs object and except to each statement and conclusion of the Master's Finding of Fact No. 14 (M. R. p. 1098)

"That the Gulick specification while pending in the Patent Office was broadened beyond the original disclosure while pistons were produced, used and sold by the following parties: Elmer C. Long, Gustave C. Monckmeier, Walter L. Schoengarth, Albert L. Spillman, Kant-Skore Mfg. Co., Stephen B. Hartog, Frank Jardine, Aluminum Co. of America, Howard E. Maynard, Maxwell Motor Co., Ray Day, William E. Venner"

as contrary to the evidence; see testimony of defendants' witness Stellman R. pp. 567, 577, 578 and 579, Jeffries made [fol. 1195] defendants' witness on cross examination exceeding the direct, over plaintiffs' objection, R. pp. 150, 155 and 156, and plaintiffs' witness Jeffries R. p. 201; and see defendants' Exhibit 4-L, Gulick file wrapper; and as contrary to the concurring findings of the Law Examiner (plaintiffs' Exhibits 68A and 69A), the Examiner of Interferences (plaintiffs' Exhibits 67B and 69A'), the Examiners-in-Chief (plaintiffs' Exhibit 68B), the Commissioner of Patents (defendants' Exhibit 4-F), the Board of Appeals (plaintiffs' Exhibits 67C, 69B and 69B"), the Court of Appeals of the District of Columbia, 17 Fed. (2d) 686 (plaintiffs' Exhibit 68C), and the Court of Customs and Patent Appeals, 47 Fed. (2d) 365 (plaintiffs' Exhibit 67D) and 47 Fed. (2d) 367 (plaintiffs' Exhibit 69C).

Exception No. 6

Plaintiffs further object and except to the Master's Finding of Fact No. 14 (M. R. p. 1093), quoted in Exception No. 5, supra, and particularly to that portion thereof which states that certain pistons were produced, used and sold by various parties therein enumerated while the Gulick application was pending in the Patent Office (erroneously said by the Master to have been broadened beyond the original disclosure) as being irrelevant and immaterial.

Exception No. 7

Plaintiffs further object and except to the failure of the Master to adopt Item 10, pp. 12 and 13 of Plaintiffs' proposed Findings of Fact, briefly summarized as follows:

That claim 1 of the Gulick patent in suit was in Gulick's application when it was originally filed, as original claim 3 (defendants' Exhibit 4-L, p. 1839) and remained in the Gulick application unchanged throughout the prosecution of the application in the Patent Office.

Exception No. 8

Plaintiffs further object and except to the failure of the Master to adopt Item 23, p. 21 of the plaintiffs' proposed Findings of Fact, as follows:

Gustave Monckmeier, Walter L. Schoengarth, Albert L. Spillman, Stephen D. Hartog, Frank Jardine, Howard E. [fol. 1196] Maynard and Ray Day individually produced, used and sold no pistons while the Gulick application was pending in the Patent Office. The Kart-Skore Manufacturing Company and Aluminum Company of America produced, used and sold their pistons under license from the Plaintiff The Cleveland Trust Company, which license included the Gulick application, plaintiffs' Exhibits 38 and 39. William E. Venner produced, used and sold not more than three or four sets of pistons, the castings for which were made by Aluminum Company of America (Venner deposition p. 352). The pistons produced, used and sold by Venner or Long after the Gulick application was filed, and the Ray Day piston shown in plaintiffs' Exhibits 85 and 8, and the Jardine (Aluminum Company of America) and Maynard (Maxwell Motor Company) pistons all came within Claim 1 of the Gulick patent (Claim 3 of the Gulick application as filed) which claim has been in the application ever since it was filed and these pistons likewise came within the subject-matter which was otherwise claimed all during the prosecution of the Gulick application (See claim 1 of Gulick patent and defendants' Exhibits E, F, R and G, and plaintiffs' Exhibits 1 and 8, and Jardine and Maynard patents). Maxwell Motor Company produced, used and sold pistons licensed through Aluminum Company of America, under the patents in suit during the prosecution of the application of the patent in suit. (R. pp. 78, 126, 132, 135, 136, 955, 1050 and 1051.)

Exception No. 9

Plaintiffs except and object to the Master's Finding of Fact No. 15 (M. R. p. 1098) and to each and every statement and conclusion thereof, as follows:

"That after the filing of the Gulick application, his application was materially modified, both as to the specification and claims without warrant therefor in the original disclosure"

as contrary to the evidence; see complete file wrapper and contents of Gulick application, defendants' Exhibit 4-L, and see testimony of plaintiffs' witness Jeffries, R. pp. 173, 174 and 201, and the evidence cited in support of Exception No. 5, supra.

[fol. 1197] Exception No. 10

Plaintiffs object and except to the failure of the Master to adopt item 19, page 20 of plaintiffs' proposed Findings of Fact:

That there was no enlargement of the disclosure of the Gulick specification or claims over the original disclosure

as shown by the evidence cited in support of plaintiffs' Exceptions Nos. 5, 7, 9 and 11.

Exception No. 11

Plaintiffs object and except to each statement and conclusion of the Master's Finding of Fact No. 16 (M. R. p. 1099)

"That the Gulick patent does not describe in sufficient detail to enable one skilled in the art to reproduce the same, the length and thickness of the webs required to secure flexibility"

as contrary to the evidence; see testimony of defendants' witness Stellman R. pp. 567, 578 and 579, and plaintiffs' witness Jeffries, R. pp. 173, 174 and 201, and see the concurring findings of the Courts and Patent Office tribunals, plaintiffs' Exhibits 67, 68 and 69 (17 F. (2d) 686, 47 F. (2d) 365 and 47 F. (2d) 367), and as contrary to and irreconcilable with the Master's Findings of Fact Nos. 19 and 24 (M. R. p. 1099).

Exception No. 12

Plaintiffs further object and except to the failure of the Master to adopt item 22 of page 14 of plaintiffs' proposed Findings of Fact in substance briefly as follows:

That the Gulick patent in suit is not indefinite and that the disclosure of the Gulick patent in suit is sufficient to teach those skilled in the art how to practice the inventions described and claimed therein.

as shown by the evidence cited in support of plaintiffs' Exception No. 11, supra.

Exception No. 13

Plaintiffs object and except to the Master's Finding of Fact No. 17 (M. R. p. 1099) and to each and every part thereof, comprising each of the following statements and conclusions:

[fol. 1198] (a) "That the Jardine patent embodies the fundamental structure of Franquist patent No. 1,153,902,"

as contrary to the evidence; see the testimony of defendants' witnesses Stellman, R. pp. 554 and 566, Dorris R. p. 1079, and Jeffries, made defendants' witness on cross examination exceeding the direct over plaintiffs' objection, R. pp. 177 and 178, and plaintiffs' witness Jeffries R. pp. 202 to 204 and 207; and see defendants' Exhibit 3-Q, piston made in accordance with the Franquist patent R. p. 178, and the tests thereof exhibited to the Master R. pp. 207 and 208; and object and except to the statement and conclusion:

(b) "that it employs esentially the slipper piston structure of the Ricardo patent No. 1,294,833; and"

as contrary to the evidence; see the testimony of defendants' witness Stellman R. pp. 529, 554 and 566, and Plaintiffs' witness Jeffries R. pp. 74 to 76, 188, 189, 196, 259 and 260, and see defendants' Exhibit 4-L_2 p. 2052 (Jardine file wrapper citing Ricardo patent); and object and except to the statement and conclusion:

(c) "that the splitting of the slippers of the Ricardo patent was within the purview of one skilled in the art;"

as contrary to the evidence; see testimony of defendants' witnesses Stellman R. pp. 538 to 541, 545 to 547, 547, 554 and 566, Dorris R. pp. 1081 and 1082, and plaintiffs' witness Jeffries R. pp. 117, 142, 144, 145, 184 to 188, 205, 206,

219, 220, 226, 228, 256 to 257, 260 and 261, and the evidence cited in support of plaintiffs' Exception No. 3, supra.

Exception No. 14

Plaintiffs except and object to each and every statement and conclusion of the Master's Finding of Fact No. 18 (M. R. p. 1099)

"That the Jardine patent piston differs from the piston of the Long patent 1,872,772 in matters involving mere mechanical skill."

as contrary to the evidence; see the testimony of defendants' witness Stellman R. pp. 529, 562, 554 and 566; and contrary to the findings of the Patent Office in allowing the [fol. 1199] claims of the Jardine patent after extensive interferences with various Long applications, including his application that matured into Patent 1,872,772 (defendants' Exhibit $4L_2$ pp. 2068 to 2100) and as contrary to the evidence cited in support of plaintiffs' Exception No. 3, supra, and plaintiffs' Exception No. 42, post.

Exception No. 15

Plaintiffs except and object to each and every statement and conclusion of the Master's Finding of Fact No. 19 (M. R. p. 1099)

"That the Jardine piston differs from the piston of the Gulick patent in matters involving mere mechanical skill."

as contrary to the evidence; see the testimony of defendants' witness Stellman R. pp. 554 and 566, and plaintiffs' witness Dr. Jeffries R. pp. 74 to 76, and the findings of the Patent Office in allowing the claims of the Jardine patent after numerous and extensive interferences with the Gulick application (defendants' Exhibit $4L_2$ pp. 2068 to 2087) and as contrary to the evidence cited in support of plaintiffs' Exception No. 3, supra.

Exception No. 16

Plaintiffs further object and except to the failure of the Master to adopt items 1 and 2 of page 24 of plaintiffs' proposed Findings of Fact, summarized briefly as follows:

The piston described and claimed in Jardine Patent No. 1,763,523 was based upon a new and original combination of elements that, coacting together, gave rise to a new mode of operation of the resulting piston structure and the new combination of elements described in the Jardine patent in suit and claimed in the claims in suit of the patent provided the first piston structure embodying these elements in combination and having the mode of operation and accomplished the results of the Jardine patented piston, and no prior art structure exhibited by defendants has the structure, mode of operation, or accomplishes the results of the piston described and claimed in the Jardine patent in suit.

[fol. 1200] as shown by the evidence; see testimony of defendants' witness Stellman R. p. 554, and the evidence cited in support of Exceptions Nos. 13, 14 and 15, supra.

Exception No. 17

Plaintiffs except and object to each and every statement and conclusion of the Master's Finding of Fact No. 20 (M. R. p. 1099)

"That the Jardine patent does not describe in sufficient detail to enable one skilled in the art to reproduce the same, the length and thickness of the webs required to secure flexibility."

as contrary to the evidence; see the testimony of defendants' witness Stellman, Deposition R. pp. 461, 462 and 470, and R. p. 529, and plaintiffs' witness Jeffries R. pp. 122, 170, and see the Jardine patent in suit (plaintiffs' Exhibit 3); and as contrary to and irreconcilable with the Master's Finding of Fact No. 22 (M. R. p. 1099).

Exception No. 18

Plaintiffs further except to the failure of the Master to adopt item 22, page 14 of plaintiffs' proposed Findings of Fact, in substance briefly as follows:

That the Jardine patent in suit is not indefinite and that the disclosure of the Jardine patent in suit is sufficient to teach those skilled in the art how to practice the invention described and claimed therein.

as shown by the evidence cited in support of plaintiffs' Exception No. 17.

Exception No. 19

Plaintiffs except and object to the Master's Finding of Fact No. 21 (M. R. p. 1099) and to each and every part of each of the following statements made therein:

"The Maynard patent embodies the fundamental structure of the Franquist patent No. 1,153,902, and that the splitting of the skirt by through and through slotting was within the purview of one skilled in the art."

as not pleaded against this patent in defendants' answer; and as contrary to the evidence; see the testimony of defendants' witness Stellman R. pp. 528, 554 and 566; and [fol. 1201] plaintiffs' witness Jeffries R. p. 204, and the evidence cited in support of plaintiffs' Exception No. 3, supra.

[fol. 1201] Exception No. 20

Plaintiffs except and object to each and every statement of the Master's Finding of Fact No. 22

"That the Maynard patent piston differs from the piston of the Jardine patent 1,763,523 in matters involving mere mechanical skill."

as contrary to the evidence; see testimony of defendants' witness Stellman, R. pp. 554 and 566, and plaintiffs' witness Jeffries, R. pp. 76 and 77; and see defendants' Exhibit 4L (file wrapper of Maynard showing extensive interferences with Jardine) and as contrary to the evidence cited in support of plaintiffs' Exception No. 3, supra.

Exception No. 21

Plaintiffs except and object to each and every statement and conclusion of the Master's Finding of Fact No. 23

"That the Maynard patent piston differs from the piston of the Long patent 1,395,441 in matters involving mere mechanical skill."

as contrary to the evidence; see testimony of defendants' witness Stellman R. pp. 554 and 566, and the evidence cited in support of plaintiff's Exception No. 3, supra.

Exception No. 22

Plaintiffs except and object to each and every statement of the Master's Finding of Fact No. 24 (M. R. p. 1099)

"That the Maynard patent piston differs from the piston of the Gulick patent in matters involving mere mechanical skill."

as contrary to the evidence; see testimony of defendants' witness Stellman, R. pp. 554 and 566, and plaintiffs' witness Jeffries R. pp. 81 and 82, and see defendants' Exhibit 4L, pp. 1871 to 1893, (Maynard file wrapper showing extensive interferences with Gulick); and contrary to the evidence cited in support of plaintiffs' Exception No. 3, supra.

[fol. 1202] Exception No. 23

Plaintiffs except and object to each and every statement of the Master's Finding of Fact No. 25 (M. R. p. 1099)

"That the Maynard patent piston differs from the piston of the Schmiedeknecht patent in matters involving mere mechanical skill."

as contrary to the evidence; see testimony of defendants' witness Stellman R. pp. 554 and 566 and see defendants' Exhibit 4L4, p. 2219 (Maynard file wrapper showing consideration of Schmiedeknecht patent); and as contrary to the evidence cited in support of plaintiffs' Exception No. 3, supra.

Exception No. 24

Plaintiffs except and object to each and every statement of the Master's Finding of Fact No. 26 (M. R. p. 1099)

"That the Maynard patent piston differs from the piston of the Ricardo patent 1,294,883 in matters involving mere mechanical skill."

as contrary to the evidence; see testimony of defendants' witness Stellman R. pp. 554, 555, 566 and 574, and plaintiffs' witness Jeffries R. p. 188, and see defendants' Exhibit 4L4, p. 2155 (Maynard file wrapper showing consideration of Ricardo patent); and as contrary to the evidence cited in support of plaintiffs' Exception No. 3, supra.

Exception No. 25

Plaintiffs except and object to each and every statement of the Master's Finding of Fact No. 27 (M. R. p. 1099)

"That the Maynard patent piston differs from the piston of the Hives patent No. 140,998 in matters involving mere mechanical skill."

as not pleaded in defendants' answer, and as contrary to the evidence; see the testimony of defendants' witness Stellman, R. p. 554, plaintiffs' witness Jeffries, R. p. 940, and see defendants' Exhibit 4L4, page 2168, (Maynard file wrapper showing consideration of Hives patent); and as contrary to the evidence cited in support of plaintiffs' Exception No. 3, supra.

[fol. 1203] Exception No. 26

Plaintiffs further except and object to the failure of the Master to adopt items 1 and 2, page 25 of plaintiffs' proposed Findings of Fact, summarized briefly as follows:

The piston described and claimed in Maynard patent, No. 1,655,968, in suit was based upon a new and original combination of elements that, coacting together, gave rise to a new mode of operation of the resulting piston structure and the new combination of elements described in the Maynard patent and claimed in the claims in suit of the patent provided the first piston structure embodying these elements in combinations, and having the mode of operation and accomplishing the results of the Maynard patented piston, and no prior art piston exhibited to the Court has the structure, mode of operation, or accomplished the results of the piston described and claimed in the Maynard patent in suit.

as shown by the evidence; see evidence relied upon in support of Plaintiffs' Exceptions Nos. 19, 20, 21, 22, 23, 24 and 25.

Exception No. 27

Plaintiffs object and except to each and every statement and conclusion of the Master's Finding of Fact No. 28 (M. R. p. 1099)

"That the Mooers patent embodies the fundamental structure of the Franquist patent No. 1,153,902 and that

the employment of narrow connectors was within the purview of one skilled in the art.'

as contrary to the evidence; see the testimony of defendants' witness Stellman R. pp. 554 and 574, and Jeffries, made defendants' witness by cross examination exceeding direct over plaintiffs' objection, R. pp. 108 and 175 to 178, and plaintiffs' witness Jeffries, R. pp. 202, 204 and 205; and see defendants' Exhibit 4L$_1$, p. 1988 (file history of Mooers showing consideration of Franquist patent) and as contrary to the evidence cited in support of Exception No. 3, supra.

[fol. 1204] Exception No. 28

Plaintiffs object and except to each and every statement and conclusion of the Master's Finding of Fact No. 29 (M. R. p. 1100)

"That the Mooers patent piston differs from the piston of the Spillman & Mooers patent No. 1,092,870 in suit in matters involving mere mechanical skill."

as contrary to the evidence; see the testimony of defendants' witness Stellman, R. pp. 554, 560 and 561, and Jeffries, made defendants' witness on cross examination exceeding direct over plaintiffs' objection, R. pp. 108 to 109, and plaintiffs' witness Jeffries R. pp. 197, 198 and 204; and see face of Mooers patent citing Spillman & Mooers; and as contrary to the evidence cited in support of plaintiffs' Exception No. 3, supra.

Exception No. 29

Plaintiffs object and except to each and every statement and conclusion of the Master's Finding of Fact No. 30 (M. R. p. 1100)

"That the Mooers patent piston differs from the piston of the Chenard & Walcker patent No. 468,595 in matters involving mere mechanical skill."

as contrary to the evidence; see testimony of defendants' witness Stellman, R. pp. 554, 560, 561 and 562, and plaintiffs' witness Jeffries R. pp. 947 and 948; and see defendants' Exhibit 4L$_1$, page 1988, (Mooers file wrapper showing consideration of Chenard & Walcker patent); and as con-

trary to the evidence cited in support of plaintiffs' Exception No. 3, supra.

Exception No. 30

Plaintiffs object and except to each and every statement and conclusion of the Master's Finding of Fact No. 31 (M. R. p. 1100)

"That the Mooers patent piston differs from the piston of the Gulick 1911 and 1914 pistons (Exhibits 48 and 51) in matters involving mere mechanical skill."

as contrary to the evidence; see the testimony of defendants' witness Stellman, R. p. 554; and as contrary to the evidence cited in support of plaintiffs' Exception No. 3, supra.

[fol. 1205] Exception No. 31

Plaintiffs further object and except to the failure of the Master to adopt items 1 and 2 of page 27 of plaintiffs' proposed Findings of Fact, summarized briefly as follows:

That the piston described and claimed in Mooers patent No. 1,402,309 was based upon a new and original combination of elements that, coacting together, gave rise to a new mode of operation of the resulting piston structure and the new combination of elements described in the Mooers patent in suit and claimed in the claims in suit of his patent provided the first piston structure embodying these elements in combination having the mode of operation and accomplishing the results of the Mooers patented piston, and no prior art structure exhibited by defendants had the structure, mode of operation or accomplished the results of the piston described and claimed in the Mooers patent in suit.

as shown by the evidence cited in support of plaintiffs' Exceptions Nos. 27, 28, 29 and 30, supra.

Exception No. 32

Plaintiffs object and except to each and every statement and conclusion of the Master's Finding of Fact No. 32 (M. R. p. 1100)

"That after the filing of the Mooers application, his application was materially modified both as to specification and claims without warrant therefore in the original disclosure."

as contrary to the evidence; see testimony of defendants' witness Stellman R. p. 517, and plaintiffs' witness Jeffries R. pp. 78 to 79.

Exception No. 33

Plaintiffs further object and except to the failure of the Master to find:

That there was no enlargement of the disclosure of the Mooers specification or claims over the original disclosure.

as shown by defendants' Exhibit 4L$_1$ (file wrapper of the Mooers patent), offered R. p. 591, and the affidavits appearing therein on pages 16, 37 and 38.

[fol. 1206] Exception No. 34

Plaintiffs object and except to each and every statement and conclusion of the Master's Finding of Fact No. 33 (M. R. p. 1100) comprising the statement and conclusion

(a) "That the Schmiedeknecht patent involves the fundamental structure of the Franquist patent No. 1,153,902 or of any trunk piston;"

as not pleaded against this patent in defendants' answer; as contrary to the evidence; see the testimony of defendants' witness Stellman, R. pp. 554, 552, 553, and 522; and plaintiffs' witness Jeffries, R. pp. 114 and 205; and as irreconcilable and inconsistent with the Master's holding (M. R. p. 1119); and excepts to the statement and conclusion:

(b) "that it employs essentially the construction and arrangement of webs and mounting of wrist pin bosses of the Pugh British patent 17,256 of 1907 and the arrangement of the webs of the Ferry British patent 12,772 of 1914; and that the construction of the Schmiedeknecht patent differs from those of Pugh and Ferry patents and from a trunk piston in matters of design involving mere mechanical skill."

as contrary to the evidence; see the testimony of defendants' witness Stellman R. pp. 513, 515, and 516, and plaintiffs' witness Jeffries R. pp. 114 to 115, 950 and 951, and see defendants' Exhibit 4L$_3$, (the Schmiedeknecht file wrapper showing consideration of the Pugh and Ferry patents); and as contrary to the evidence cited in support of plaintiffs' Exception No. 3, supra.

Exception No. 35

Plaintiffs further object and except to the failure of the Master to adopt items 1 and 2 of page 26 of plaintiffs' proposed Findings of Fact;

That the piston described and claimed in Schmiedeknecht patent No. 1,256,265 was based upon a new and original combination of elements that, coacting together, gave rise to a new mode of operation of the resulting piston structure, and the new combination of elements described in the Schmiedeknecht patent in suit and claimed in the claims in suit of the Schmiedeknecht patent provided the first piston [fol. 1207] structure embodying these elements in combination and having the mode of operation and accomplishing the results of the Schmiedeknecht patented piston, and no prior art piston structure exhibited by defendants has the structure, mode of operation or accomplished the results of the piston described and claimed in the Schmiedeknecht patent in suit.

as shown by the evidence cited in support of plaintiffs' Exception No. 34, supra.

Exception No. 36

Plaintiffs object and except to the Master's Finding of Fact No. 34 (M. R. p. 1100) in the Master's use of the word "admission" in line 1 thereof as erroneously characterizing the whole direct Gulick testimony, R. pp. 699 to 730; and object and except to the statement and conclusion:

(a) "that such piston like Ex. 51 was not given a block test for the reason given by Gulick that he was satisfied with the previous tests * * *;"

as contrary to evidence of plaintiffs' witness Gulick R. p. 734; and object and except to the statement and conclusion:

(b) "that no effort was made to place the embodiments of the 1911 and 1914 pistons in the application of the Gulick patent;"

as contrary to the evidence cited in support of plaintiffs' Exception No. 7, supra, and as contrary to and irreconcilable with that part of the Master's Finding of Fact No. 12 (M. R. p. 1098) stating:

(c) "that by admission of plaintiffs' counsel, both pistons (the 1911 and 1914 pistons) embody the subject matter of claims 1, 4, 15, 25, 27, 28, 33, 34, 36, 42 and 43 and Ex. 51 (the 1914 piston) additionally of claim 38." (Parenthetical inserts ours)

Exception No. 37

Plaintiffs object and except to the failure of the Master to find from the evidence:

(a) That the piston is the heart and vital spot of the motor and it is essential that pistons be rugged and durable·

[fol. 1208] see testimony of defendants' witnesses Stellman, R. pp. 588 to 590, Dorris R. p. 1077, plaintiffs' witness Jeffries R. pp. 61, 62, 915, 936 and 962; and object and except to his failure to find:

(b) That only many thousands of miles of testing over much time can prove durability of pistons;

see defendants' deposition Exhibits D and H, and plaintiffs' Exhibit 42c, and the testimony of defendants' witness Stellman, Deposition R. pp. 451 to 457, and plaintiffs' witnesses Gulick R. pp. 802 to 810, Burns R. p. 677, Jeffries R. pp. 915, 959, 960 and 963; and object and except to his failure to find:

(c) That in 1911 and 1914 pistons were block tested and road tested in automobiles operated by engineers in the ordinary course of their business and pleasure, for many thousands of miles and over long periods of time;

see testimony of defendants' witness Stellman, Deposition R. pp. 451 to 457, and R. p. 473, Dorris R. pp. 1075 to 1076, 1082, 1083, and 1086 to 1089, and see defendants' deposition Exhibits D and H, and plaintiffs' Exhibit 42c, and the testimony of plaintiffs' witnesses Murphy R. pp. 653 and 654, Burns R. pp. 674, 676, 677, 691, to 692, Gulick R. pp. 803 to 810 and 822 to 823, and Jeffries R. pp. 914, 916 and 976, and object and except to his failure to find:

(d) That external observation of the motor, listening to the motor, observing behavior of the motor under different conditions was the common method of testing pistons in 1911 and 1914;

see testimony of Burns R. pp. 686, 691 and 692, Gulick R. pp. 809 and 810, and see Franklin Company Experimental

Records, defendants' Exhibits D and H, and plaintiffs' Exhibit 42c; and object and except to his failure to find:

(e) That experimentation concludes only when pistons go into production;

see testimony of defendants' witness Dorris R. p. 1076.

Exception No. 38

Plaintiffs object and except to the Master's Finding of Fact No. 35 (M. R. p. 1102) and to each and every statement and conclusion thereof, comprising each of the following statements:

[fol. 1209] (a) "That the Monckmeier pistons, Exs. 3-V and 3-W, were in use by Gustave C. Monckmeier in this country in his automobile for more than two years prior to the Gulick application for patent; that such pistons embodied a T-slot disposed intermediate the wrist pin bosses with the horizontal of the T below the bottom ring land and with the vertical of the T intermediate the bosses;"

as not pleaded in defendants' answer, as immaterial and irrelevant; and as not proved beyond a reasonable doubt; see testimony of plaintiffs' witnesses, Sweet R. pp. 833, 834 and 835, Henderson R. pp. 847, 848 and 849, and Jeffries R. pp. 923 and 924, and defendants' witness D'Vorsky R. p. 332; and plaintiffs object and except to the statement and conclusion:

(b) "that such T-slotting functioned to compensate for expansion; that any reduction in head diameter to the horizontal slot involved mere mechanical skill;"

as contrary to the evidence; see testimony of defendants' witnesses Monckmeier R. pp. 305, 306 and 311, D'Vorsky R. pp. 336 and 343, and Stellman R. pp. 481, 556, 557 and 558; and see defendants' Exhibit 4-P; and the testimony of plaintiffs' witness Jeffries R. pp. 922, 923 and 924; and plaintiffs object and except to the statement and conclusion:

(c) "that such use of the Monckmeier pistons more than two years prior to the application of the Gulick patent in suit was open and not in secret but known to others and in fact public;"

as not proved beyond a reasonable doubt; see testimony of defendants' witness Monckmeier R. pp. 300, 303 and 319; and plaintiffs object and except to the statement:

(d) "that the testimony of Monckmeier and his corroborating witnesses is reasonably satisfactory and reliable."

as contrary to the evidence; see the testimony of plaintiffs' witnesses, Jeffries R. pp. 921 to 924, Sweet R. pp. 834, 835, 847 and 848 (as to splits in the Monckmeier pistons) and R. pp. 833 and 834 (as to the date of change from iron to aluminum) and Henderson R. pp. 848 and 849 (as to splits in the Monckmeier pistons) and R. pp. 848 and [fol. 1210] 849 (as to date of change from iron to aluminum pistons) and Jeffries R. pp. 921 to 924; and see the sketch defendants' Exhibit 4-Q (made by D'Vorsky when he saw only the aluminum pistons defendants' Exhibit 3-W, R. p. 334).

Exception No. 39

Plaintiffs object and except to the failure of the Master to adopt items 1 to 8 inclusive, of pages 29 to 31 inclusive, of plaintiffs' Proposed Findings of Fact, summarized briefly as follows:

That the evidence does not establish beyond a reasonable doubt that Monckmeier had a split skirt piston like defendants' Exhibits 3-V and 3-W, or had such pistons in public use more than two years prior to Gulick's filing date; and that such pistons as Monckmeier may have made, which he claims were split, were only experimental and were abandoned; and that there is no contemporaneous documentary evidence showing that Monckmeier ever had a split skirt piston or publicly used any split skirt piston;

see evidence cited in support of plaintiffs' Exception No. 38, supra.

Exception No. 40

Plaintiffs object and except to each and every statement and conclusion of the Master's Finding of Fact No. 36 (M. R. p. 1102)

"That for more than two years prior to the application of the patent in suit, Walter L. Schoengarth made and sold at Ironwood, Michigan, pistons of the construction shown and described in the Schoengarth patent 1,174,092 but omitting the adjusting device; that such pistons functioned to compensate for expansion; that any reduction of head diameter to circumferential slot was a matter within the

purview of a skilled mechanic; and that the Schoengarth pistons were publicly used and sold in this country more than two years prior to Gulick's application for patent. That for more than two years prior to the application of the patent in suit, Walter L. Schoengarth made and sold at Ironwood, Michigan, pistons of the construction shown and [fol. 1211] described in the Schoengarth patent 1,174,092. That the testimony of Schoengarth is reasonably corroborated, satisfactory and reliable. That the omission of the adjusting devices is within the purview of any skilled mechanic."

as immaterial and irrelevant, as not proved beyond a reasonable doubt, and as contrary to the evidence; see the testimony of defendants' witnesses Schoengarth R. pp. 900, 908 and 910, Stellman, R. p. 560, and plaintiffs' witness Dr. Jeffries, R. pp. 915 to 917, 1053 and 1054.

Exception No. 41

Plaintiffs object and except to the failure of the Master to adopt all of plaintiffs' Proposed Findings of Fact, pages 32 and 33, briefly summarized as follows:

That this piston described in the Schoengarth patent does not have the structure, mode of operation, or results of any patent in suit and only operates like and only accomplishes the results of a conventional trunk type piston; that the piston described in the Schoengarth patent, with the adjusting device omitted, does not have the structure, mode of operation or accomplish the results of any patent in suit;

as shown by the evidence; see the testimony of defendants' witness Dorris R. p. 1078 and plaintiffs' witness Jeffries R. pp. 915 to 917, and

that Schoengarth did not prove either public use or sale of any piston like that shown in his patent more than two years before the filing date of any patent in suit;

as shown by the evidence; see the testimony of defendants' witness Schoengarth R. pp. 900, 908 and 909.

Exception No. 42

Plaintiffs object and except to the following statements and conclusions in the Master's Finding of Fact No. 37 (M. R. pp. 1102 and 1103)

"That one Elmer C. Long, in March, 1916 exhibited to Louis Stellman and William Venner at Syracuse, New York, a six slotted piston of the construction shown by Exs. Y and [fol. 1212] A respectively. That six slotted pistons of the construction shown in Exhibit A and also in Exhibit F were sold by Long to Venner while Venner was at South Bend, Indiana, as early as 1917, and that during the year, 1917, Venner sold such pistons as replacements in Franklin automobiles; and that Venner continued to sell such pistons furnished him by Long and of the construction shown in Exs. E, F and G from 1918 to 1926. That a piston of the construction shown in the Long patent 1,395,441 with a T-slot was tested at Franklin Automobile Co., at Syracuse, New York, July, 1918 as admitted by plaintiff's witness, Burns. That during the year 1918, Elmer C. Long manufactured and sold six-slotted pistons of the construction shown in Exs. E, F, G and R for replacement in automobiles and that such pistons were actually used during the year, 1918 in automobiles; * * *" and

* * * * * * *

"That the Long pistons of 1917-1926 were successful pistons and from 1917 to 1922 were the only commercial pistons which automatically compensated for expansion."

as immaterial, as not proved beyond a reasonable doubt, as unsupported by any contemporaneous documentary evidence; and as contrary to the evidence; see testimony of defendant's witness Stellman, Deposition R. pp. 458, 459, 456, 562, 570, and Venner Deposition R. pp. 360, 361; and plaintiff's witness Murphy, R. p. 653; also see plaintiff's Exhibits Nos. 42, 43, 44 and 45; and see interference decisions plaintiff's Exhibits 67-B, pp. 1536 and 1537, 67-C, p. 1539, 69-A, p. 1550, 70-A, pp. 1566 and 1569, 70-B, p. 1571.

Exception No. 43

Plaintiffs object and except to the Master's failure to adopt items 1 to 5, inclusive, of page 35 of plaintiff's proposed Findings of Fact, summarized briefly as follows:—

That the evidence does not establish beyond a reasonable doubt that Long ever had any pistons like Exhibits E, F, G, [fol. 1213] R or 3-F or like the pistons shown in his patents 1,395,441 or 1,872,772, prior to Gulick's filing date or prior

to Gulick's invention or prior to Schmiedeknecht or Mooers; that priority as between Gulick and Long on issues the same as made up here was decided by all the tribunals of the Patent Office and of the courts reviewing those decisions in favor of Gulick; and that the great majority of the commercially used Long pistons were made under license under the applications from which the patents in suit eventuated.

as shown by the evidence cited in support of plaintiff's Exceptions Nos. 2, item (e) and 42.

Exception No. 44

Plaintiffs object and except to each and every statement and conclusion of the Master's Finding of Fact No. 38 (M. R. p. 1104)

"That defendants' pistons, Ex. 1, BBB, CCC, 3-J, 3-O and 8 do not embody the structure, function and mode of operation of the Gulick patent in suit."

as contrary to the evidence; see testimony of defendants' witnesses Stellman, R. pp. 526, 527, 530, 536, 566, 567, 568, 579 and 580, Dorris, R. pp. 1070 to 1072, and Dr. Jeffries, made defendants' witness on cross examination exceeding the direct over plaintiffs' objection, R. pp. 124 and 174 as to Exhibit BBB, and plaintiffs' witness Jeffries R. pp. 82, 83, 84 and 158 to 160 as to Exhibit 1, R. pp. 124 and 190 as to Exhibit BBB, R. pp. 199 and 200 as to Exhibit CCC, R. p. 955 as to Exhibit 3-J, R. p. 956 as to Exhibit 3-O, and R. pp. 85 and 161 as to Exhibit 8.

Exception No. 45

Plaintiffs object and except to the failure of the Master to adopt items 3 to 8, inclusive, pages 22 and 23 of plaintiffs' Proposed Findings of Fact, summarized briefly as follows:

That each of defendants' pistons, defendants' Exhibits 1, BBB, CCC, 3-J, 3-O and 8 embody the invention claimed in each of the claims of the Gulick patent upon which plaintiffs [fol. 1214] rely and each of said defendants' pistons have the same or substantially the same structure, function and mode of operation and accomplish the same or substantially the same results as the Gulick patented piston as defined by said claims;

as shown by the evidence cited in support of plaintiffs' Exception No. 44.

Exception No. 46

Plaintiffs object and except to each and every statement and conclusion of the Master's Finding of Fact No. 39 (M. R. p. 1104)

"That defendants' pistons, Exhibits 1, BBB, CCC and 8 do not embody the structure, function and mode of operation of the Jardine patent in suit."

as contrary to the evidence; see the testimony of defendants' witness Stellman, R. pp. 566, 530, 552, 553, 579, 580, 581, 567 and 568, and Jeffries, made defendants' witness on cross examination exceeding the direct over plaintiffs' objection R. pp. 123, 124 and 173 to 175 as to Exhibit BBB, and plaintiffs' witness Jeffries, R. pp. 81 to 84 as to Exhibit 1, R. pp. 190 and 199 as to Exhibit BBB, R. p. 199 as to Exhibit CCC, and R. pp. 84 to 86 as to Exhibit 8.

Exception No. 47

Plaintiffs object and except to the failure of the Master to adopt items 3 to 6 inclusive, page 24 of plaintiffs' proposed Findings of Fact, summarized briefly as follows:

That each of defendants' pistons, defendants' Exhibits 1, BBB, CCC, and 8 embody the invention claimed in each of the claims of the Jardine patent upon which plaintiffs rely and each of said defendants' pistons have the same or substantially the same structure, function and mode of operation and accomplish the same or substantially the same results as the Jardine patented piston as defined by said claims.

as shown by the evidence cited in support of plaintiffs' Exception No. 46.

[fol. 1215] Exception No. 48

Plaintiffs object and except to each and every statement and conclusion of the Master's Finding of Fact No. 40 (M. R. p. 1104)

"That defendants' pistons, Exs. 1, BBB, CCC do not embody the structure, function and mode of operation of the Maynard patent in suit."

as contrary to the evidence; see the testimony of defendants' witness Stellman R. pp. 525, 526 and 585, and Dr. Jeffries, made defendants' witness on cross examination, exceeding the direct over plaintiffs' objection, R. pp. 124 and 174 as to Exhibit BBB, and plaintiffs' witness Jeffries, R. pp. 80 to 82, 84 and 122 to 124 as to Exhibit 1, R. p. 190 as to Exhibit BBB, and R. p. 200 as to Exhibit CCC.

Exception No. 49

Plaintiffs object and except to the failure of the Master to adopt items 3 to 6 inclusive, page 25, of plaintiffs' Proposed Findings of Fact, summarized briefly as follows:

That each of defendants' pistons, defendants' Exhibits 1, BBB, CCC embody the invention claimed in each of the claims of the Maynard patent upon which plaintiffs rely and each of said defendants' pistons have the same or substantially the same structure, function and mode of operation and accomplish the same or substantially the same results as the Maynard patented piston as defined by said claims.

as shown by the evidence cited in support of plaintiffs' Exception No. 48.

Exception No. 50

Plaintiffs object and except to each and every statement and conclusion of the Master's Finding of Fact No. 41 (M. R. p. 1104)

"That defendants' pistons, Exs. 1, BBB, CCC, 3-O, 8 and 9 do not embody the structure, function and mode of operation of the Mooers patent in suit."

as contrary to the evidence; see testimony of defendants' witnesses Stellman R. pp. 517, 518, 525 and 526, Dorris R. [fol. 1216] pp. 1071 and 1072, and Jeffries, made defendants' witness on cross examination exceeding the direct over plaintiffs' objection, R. pp. 109 and 110 as to Exhibit BBB, and plaintiffs' witness Jeffries R. pp. 83, 84, 111 and 128 as to Exhibit 1, R. pp. 199 and 234 as to Exhibit BBB, R. pp. 199, 200 and 234 as to Exhibit CCC, R. pp. 956 and 957 as to Exhibit 3-O, and R. pp. 85, 86 and 112 and 113 as to Exhibits 8 and 9.

Exception No. 51

Plaintiffs object and except to the failure of the Master to adopt items 3 to 8 inclusive, pages 27 and 28 of plaintiffs' proposed Findings of Fact, summarized briefly as follows:

That each of defendants' pistons, Exhibits 1, BBB, CCC, 3-O, 8 and 9 embody the invention claimed in each of the claims of the Mooers patent upon which plaintiffs rely and each of said defendants' pistons have the same or substantially the same structure, function and mode of operation and accomplish the same or substantially the same results as the Mooers patented piston as defined by said claims.

as shown by the evidence cited in support of plaintiffs' Exception No. 50.

Exception No. 52

Plaintiffs object and except to each and every statement and conclusion of the Master's Findings of Fact No. 42 (M. R. p. 1104)

"That defendants' piston, Ex. 1 does not embody the structure, function and mode of operation of the Schmiedeknecht patent in suit."

as contrary to the evidence; see the testimony of plaintiffs' witness Jeffries R. pp. 83, 84, 115, 116 and 117.

Exception No. 53

Plaintiffs object and except to the failure of the Master to adopt item 3 page 26 of plaintiffs' proposed Findings of Fact, summarized briefly as follows:

That defendants' piston, plaintiffs' Exhibit 1 embodies the invention claimed in each of the claims of the Schmiede-[fol. 1217] knecht patent upon which plaintiffs rely and said defendants' piston has the same or substantially the same structure, function and mode of operation and accomplish the same or substantially the same results as the Schmiedeknecht patented piston as defined by said claims;

as shown by the evidence cited in support of plaintiffs' Exception No. 52.

Exception No. 54

Plaintiffs object and except to each and every part of each of the following statements and conclusions of the Master's Finding of Fact No. 43 (M. R. p. 1104)

(a) "That the prior art requires restriction of the (Gulick) patent to the employment of webs which are of suffi-

cient length and thinness to permit flexing of those webs at the top of the skirt;"

as contrary to the evidence; see testimony of defendants' witness Stellman R. p. 566 and plaintiffs' witness Jeffries R. p. 952; and defendants' Exhibit 4-L, the Gulick file wrapper showing consideration of the same prior art patents here relied upon; and see plaintiffs' Exhibits 67 to 70 and 84, showing contrary findings by the Tribunals of the Patent Office and the Courts of the District of Columbia on substantially the same prior art; and see evidence cited in support of plaintiffs' Exceptions Nos. 1 and 2, supra; and excepts and objects to the following statement and conclusion:

(b) "that Exhibit 1 does not employ such characteristic webs;"

as contrary to the evidence; see testimony of defendants' witness Stellman R. p. 526, and plaintiffs' witness Jeffries R. pp. 81, 82, 84, 158 to 160; and contrary to the demonstrations of the flexibility of the webs of Exhibit 1 piston before the Court by plaintiffs' witness Jeffries R. p. 954; and see evidence cited in support of plaintiffs' Exception No. 44, supra, and objects and excepts to the statements and conclusion:

(c) "that Exhibit 8 does not employ such characteristic webs; and"

as contrary to the evidence; see the testimony of defendants' witness Stellman R. p. 580 and plaintiffs' witness [fol. 1218] Jeffries R. pp. 84, 85 and 161; and contrary to the Findings of the Patent Office in the Interferences shown in plaintiffs' Exs. 67 to 70 and 84 that the Gulick patent and the Ray Day application plaintiffs' Exhibit 85 embodied the same invention, see defendants' Exhibit 4-L, pp. 1886 to 1918 and see evidence cited in support of plaintiffs' Exception No. 44, supra; and objects and excepts to the statement and conclusion:

(d) "that Exhibits BBB and CCC • • • employ no webs at all."

as contrary to the evidence cited in support of plaintiffs' Exception No. 44, supra.

Exception No. 55

Plaintiffs object and except to each and every part of each of the following statements and conclusions of the Master's Finding of Fact No. 44 (M. R. p. 1104)

(a) "that the prior art requires restriction of the patent (Jardine) to the employment of webs which are of sufficient lengths and thinness to permit flexing of these webs at the top of the skirt;"

as contrary to the evidence; see testimony cited in support of plaintiffs' Exception No. 16; and excepts to the statement and conclusion.

(b) "that Ex. 1 does not employ such characteristic webs;"

as contrary to the evidence cited under item (b) of plaintiffs' Exception No. 54, supra; and excepts to the statement that

(c) "that Ex. 8 does not employ such characteristic webs;"

as contrary to the Master's holding (M. R. p. 1104) and as contrary to the evidence cited under item (c) of plaintiffs' Exception No. 54, supra; and excepts to the statement

(d) "that Exs. BBB and CCC • • • employ no webs at all."

as contrary to the evidence cited under (d) of plaintiffs' Exception No. 54, supra.

[fol. 1219] Exception No. 56

Plaintiffs object and except to the Master's Finding of Fact No. 45 (M. R. p. 1104)

"That the Maynard patent in suit describes a piston structure in which automatic compensation is not secured unless the groove E is cut into the webs F sufficiently and beyond the inside of the piston head flange to secure web extensions at the top of sufficient length and thinness to permit flexing of these web extensions at the top of the skirt;"

as contrary to the evidence cited in support of plaintiffs' Exception No. 26, supra; and excepts to the statement and conclusion:

"that Ex. 1 does not employ such characteristic webs;"

as contrary to the evidence cited in item (b) of plaintiffs' Exception No. 54, supra; and excepts to the statement and conclusion:

"that Exs. BBB and CCC employ no webs at all."

as contrary to the evidence cited in item (d) of plaintiffs' Exception No. 54, supra.

Exception No. 57

Plaintiffs object and except to each of the following statements and conclusions of the Master's Finding of Fact No. 46 (M. R. p. 1105)

"* * * that the prior art requires such a restriction;"

as contrary to the evidence cited in support of plaintiffs' Exception No. 31, supra; and plaintiffs except to the statement and conclusion:

"that in Exs. 1, BBB, CCC, 3-O, 8 and 9 the connectors are heavy and not of a structure as described in the Mooers patent and"

as contrary to the evidence cited in support of plaintiffs' Exception No. 50, supra.

Exception No. 58

Plaintiffs object and except to the statement and conclusion of the Master in his Finding of Fact No. 47 (M. R. p. 1105)

[fol. 1220] "that in Ex. 1 each wrist pin boss is supported intermediate its ends on the web and not as described and claimed in the Schmiedeknecht patent."

as contrary to the evidence cited in support of plaintiffs' Exception No. 52, supra.

Exception No. 59

Plaintiffs object and except to each and every part of the following statement and conclusion of the Master's Finding of Fact No. 48 (M. R. p. 1105)

"That in Ex. 1 automatic compensation is accomplished by what has been termed the 'Keystone relief' and not by any web flexibility at the top;"

as contrary to the evidence cited under plaintiffs' Exceptions Nos. 44, 46, 48 and 50.

Exception No. 60

Plaintiffs object and except to each and every part of the following statement and conclusion of the Master's Finding of Fact No. 49 (M. R. p. 1105)

"that such construction and arrangement does not secure the mode of operation contemplated by the Gulick and Jardine patents."

as contrary to the evidence cited in support of plaintiffs' Exceptions Nos. 44 and 46, supra.

Exception No. 61

Plaintiffs object and except to each of the following statements and conclusions of the Master's Finding of Fact No. 50 (M. R. p. 1105)

"That Exs. BBB and CCC do not employ any webs connecting the head with the skirt and, therefore, no webs of such flexibility as contemplated by the Gulick, Jardine and even Maynard patents, if the latter has such webs having such characteristics."

as contrary to the evidence cited in support of plaintiffs' Exceptions Nos. 44, 46, 48, 50, 54, 55 and 56.

[fol. 1221] Exception No. 62

Plaintiffs object and except to each and every statement and conclusion of the Master's Finding of Fact No. 51 (M. R. p. 1105)

"That defendants' pistons, Exs. 1, BBB, CCC, 3-J, 3-O, 8 and 9 employ the essential structure, function and mode of operation of the prior art, more particularly the Franquist patent No. 1,153,902 and Exs. 8 and 9, also the Chenard & Walcker French patent No. 468,595"

as contrary to the evidence; see the testimony of defendants' witness Stellman R. pp. 529, 530, 531, 552, 553, 584, 585 and

590 as to Exhibit 1; R. pp. 567 and 568 as to Exhibit BBB; and R. p. 528 as to Exhibit CCC and plaintiffs' witness Jeffries made defendants' witness on cross examination exceeding direct over plaintiff's objection R. pp. 109 and 110 and plaintiffs' witness Jeffries R. pp. 207, 208, 222 and 248.

Exceptions Nos. 63 to 97 Inc.

Plaintiffs object and except separately to each and every one of the Master's Conclusions of Law Nos. 11 to 42 inclusive, and Nos. 44 to 46, and except and object to each and every statement and conclusion therein contained and set forth as follows:

Plaintiffs' Exception No.	
63	"11 That the Gulick patent is invalid and void as to all claims in issue.
64	"12 That the Gulick patent is invalid and void as to all claims in issue for want of invention.
65	"13 That the Gulick patent is invalid and void as to claims 1, 4, 15, 25, 27, 28, 33, 34, 36, 38, 42 and 43, because (a) of abandonment—at large —by Gulick and plaintiff and intervening privities in title, and (b) of public use by Gulick in this country for more than two years prior to his application for patent.
66	"14 That the Gulick patent is invalid and void as to all claims in issue, additional to those recited in conclusion 13, (a) for want of invention over the pistons abandoned by Gulick and plaintiffs and intervening privities in title for want of invention, and (b) over the pistons [fol. 1222] in public use by Gulick more than two years prior to his application for patent.
67	"15 That the Gulick patent is destroyed and invalid in toto, because (a) of the attempt to broaden the original application as against intervening rights, (b) of material changes in the specification and claims after filing, and (c) of failure to describe and claim as required by R. S. Sec. 4888.

Plaintiffs' Exception No.

68 "16 That the Gulick patent is invalid and void as to claims 1, 4, 15, 25, 27, 28, 34, 36, 38, 42 and 43 because (a) the subject matter thereof was in public use in this country by Gustave C. Monckmeier more than two years prior to Gulick's application for patent and (b) the subject matter thereof was in public use and on sale in this country by Walter L. Schoengarth more than two years prior to Gulick's application for patent.

69 "17 That the Gulick patent is invalid and void as to all claims in issue additional to those recited in conclusion 16, for want of invention over pistons (a) in public use in this country by Gustave C. Monckmeier more than two years prior to Gulick's application for patent, and (b) in public use and on sale in this country by Walter L. Schoengarth more than two years prior to Gulick's application for patent.

70 "18 That the Jardine patent is invalid and void as to all claims in issue.

71 "19 That the Jardine patent is invalid and void as to all claims in issue for want of invention over the prior art.

72 "20 That the Jardine patent is invalid as to all claims in issue because of failure to describe and claim as required by R. S. Sec. 4888.

73 "21 That the Maynard patent is invalid and void as to all claims in issue.

74 "22 That the Maynard patent is invalid and void as to all claims in issue for want of invention over the prior art.

[fol. 1223]

75 "23 That the Maynard patent is invalid as to all claims in issue because of failure to describe and claim as required by R. S. Sec. 4888.

76 "24 That the Mooers patent is invalid and void as to all claims in issue.

77 "25 That the Mooers patent is invalid and void as to all claims in issue for want of invention over the prior art.

Plaintiffs' Exception No.

78 "26 That the Mooers patent is destroyed and invalid in toto because (a) of the attempt to broaden the original application as against intervening rights, (b) of material changes in the specification and claims after filing, and (c) of failure to describe and claim as required by R. S. Sec. 4888.

79 "27 That the Schmiedeknecht patent is invalid and void as to all claims in issue.

80 "28 That the Schmiedeknecht patent is invalid and void as to all claims in issue for want of invention over the prior art.

81 "29 That the Gulick 1911 piston, Ex. 48 was abandoned to the public by Gulick, plaintiff and intervening privities in title.

82 "30 That the Gulick 1914 piston, Ex. 51 was abandoned to the public by Gulick, plaintiff and intervening privities in title.

83 "31 That the Gulick 1911 piston, Ex. 48, was in public use in this country by Gulick for more than two years prior to his application for patent.

84 "32 That the Gulick 1914 piston, Ex. 51, was in public use in this country by Gulick for more than two years prior to his application for patent.

85 "33 That the Monckmeier pistons, Exs. 3-V and 3-W were in public use in this country for more than two years prior to Gulick's application for patent.

86 "34 That the piston disclosure in the Schoengarth patent 1,174,092 was in public use and on sale in this country for more than two years prior to Gulick's application for patent.

[fol. 1224]

87 "35 That a piston of the construction disclosed in the Schoengarth patent 1,174,092, but without the adjusting devices, was in public use and on sale in this country for more than two years prior to Gulick's application for patent.

Plaintiffs' Exception No.

88 "36 That the sale and use of pistons and activities in the production and development of pistons by the following parties constitute adverse and intervening rights as against Gulick, plaintiff and intervening privities in title of the Gulick patent in suit, Elmer C. Long, Gustave C. Monckmeier, Walter L. Schoengarth, Albert L. Spillman and Kant-Skore Mfg. Co., Stephen D. Hartog, Frank Jardine and Aluminum Company of America, Howard E. Maynard and Maxwell Motor Co., Ray Day, William E. Venner, W. K. Weems and Charles Chadwick.

89 "37 That defendants' pistons, Exs. 1, BBB, CCC, 3-J, 3-O and 8 do not infringe the Gulick patent in suit.

90 "38 That defendants' pistons, Exs. 1, BBB, CCC, and 8 do not infringe the Jardine patent in suit.

91 "39 That defendants' pistons, Exs. 1, BBB and CCC do not infringe the Maynard patent in suit.

92 "40 That defendants' pistons, Exs. 1, BBB, CCC, 3-O, 8 and 9 do not infringe the Mooers patent in suit.

93 "41 That defendants' piston, Ex. 1, does not infringe the Schmiedeknecht patent in suit.

94 "42 That prior art not cited in the answer may be used to show want of invention, particularly as to use of expedients.

95 "44 That plaintiff is not entitled to the relief prayed for in the Bills of Complaint, or any part thereof.

96 "45 That said Bills of Complaint be dismissed.

97 "46 That defendants have and recover against the plaintiff the costs of suit."

[fol. 1225] and object and except to each of the foregoing Conclusions of Law as based upon erroneous findings of fact as hereinbefore specifically pointed out and as based on erroneous conclusions from the evidence referred to in the foregoing Exceptions, and as based on erroneous appli-

cation of the law to the facts established by the evidence, and as based on erroneous applications of the law to the Master's Findings of Fact to which plaintiff has heretofore taken specific objections and exceptions.

Exception No. 98

Plaintiffs object and except to the failure of the Master to conclude as a matter of law that the acts testified to by Monckmeier with regard to the pistons, defendants' Exhibits 3-V and 3-W, constituted no more than an abandoned experiment and did not constitute any public use within the meaning or intent of the statute prior to Gulick's filing date. (For evidence see plaintiffs' Exception No. 38.)

Exception No. 99

Plaintiffs object and except to the failure of the Master to conclude as a matter of law that the acts testified to by Schoengarth constituted no more than an abandoned experiment and did not constitute any public use within the meaning and intent of the statute prior to Gulick's filing date. (For evidence see plaintiffs' Exception No. 40.)

Exception No. 100

Plaintiffs object and except to the failure and refusal of the Master to adopt as his conclusion of law, the substance of Item 6 of page 5, of plaintiffs' proposed Conclusions of Law, in that defendants are bound by the testimony of Gulick on the cross examination, exceeding the direct examination over plaintiffs' objection, that Gulick's work prior to his filing date was experimental and never amounted to public use of any piston covered by his patent in suit. (For evidence see R. pp. 754, 755 and 768.)

Exception No. 101

Plaintiffs object and except to the failure and refusal of the Master to conclude as proposed by plaintiffs in Items 11, 12 and 13 on page 6, plaintiffs' proposed con-
[fol. 1226] clusions of law that Gulick was the original, first and sole inventor of the invention described and claimed in the Gulick patent No. 1,815,733, and that said patent is valid and sufficient in law particularly as to claims 1, 4, 11, 12, 13, 15, 18, 22, 27, 28, 29, 30, 33, 34, 35,

36, 37, 38, 41, 42 and 43, and the Gulick patent, describing and claiming a pioneer invention, is entitled to a liberal interpretation and a broad range of equivalents. (For evidence, see that cited in Exceptions Nos. 1 to 12 inc., supra.)

Exception No. 102

Plaintiffs object and except to the failure and refusal of the Master to adopt plaintiffs' proposed conclusions of law set forth in Items 14 to 19 inclusive, pages 6 and 7 thereof, in substance that defendants have infringed the Gulick patent by the manufacture, use or sale of pistons like Defendant's Exhibits 1, 8, BBB, CCC, 3-J, 3-O, and the particular claims of the Gulick patent with reference to each exhibit as specifically set forth in plaintiffs' proposed conclusions. (For evidence, see that cited in Exceptions Nos. 44, 54, 59, 60 and 61, supra.)

Exception No. 103

Plaintiffs object and except to the Master's failure and refusal to adopt the conclusion of law proposed by plaintiffs in items 1 and 2 of page 8 of their proposed conclusions of law, in substance that Jardine was the original, first, and sole inventor of the invention disclosed and claimed in Jardine patent No. 1,763,523 and that the said Jardine patent is valid and sufficient in law particularly as to claims 1 and 2 and claims 4 to 11 inclusive thereof. (For evidence, see that cited in Exceptions Nos. 3 and 14 to 18 inc., supra.)

Exception No. 104

Plaintiffs object and except to the Master's failure and refusal to adopt the conclusion of law proposed by plaintiffs in items 3 to 6 inclusive on page 8 of their proposed conclusions, in substance that the defendants have infringed the Jardine patent No. 1,763,523 by making, using and selling, pistons like defendants' Exhibits 1, 8, BBB and CCC with respect to the claims of said patent specifically set forth with relation to each exhibit in said items of plaintiffs' proposed conclusions. (For evidence, see that cited in Exceptions Nos. 46, 55, 59, 60 and 61, supra.)

[fol. 1227] Exception No. 105

Plaintiffs object and except to the Master's failure and refusal to adopt as his conclusion of law items 1 and 2

on page 9 of plaintiffs' proposed conclusions of law, in substance that Maynard was the original, first, and sole inventor of the invention described and claimed in the Maynard patent No. 1,655,968 and that the said Maynard patent is valid and sufficient in law as to all the claims thereof. (For evidence, see that cited in Exceptions Nos. 3 and 19 to 26 Inc., supra.)

Exception No. 106

Plaintiffs object and except to the Master's failure and refusal to adopt as a conclusion of law items 3 to 5 inclusive on page 9 of plaintiffs' proposed conclusions of law, in substance that defendants infringed the Maynard patent No. 1,655,968 by making, using and selling, pistons like defendants' Exhibits 1, BBB and CCC with respect to the claims of said patent specifically set out with relation to each exhibit in the said items of plaintiffs' proposed conclusions. (For evidence, see that cited in Exceptions Nos. 48, 56, 59 and 61, supra.)

Exception No. 107

Plaintiffs object and except to the Master's failure and refusal to adopt as his conclusion of law items 1 and 2 of page 10 of plaintiffs' proposed conclusions of law, in substance that Mooers was the original, first, and sole inventor of the invention described and claimed in the Mooers patent No. 1,402,309 and that the said Mooers patent is valid and sufficient in law as to claims 1 to 4 inclusive and 6, 8, 10 and 11 thereof. (For evidence, see that cited in Exceptions Nos. 3 and 27 to 33 Inc., supra.)

Exception No. 108

Plaintiffs object and except to the Master's failure and refusal to adopt as a conclusion of law items 3 to 8 inclusive of page 10 of plaintiffs' proposed conclusions of law, in substance that defendants infringed the Mooers patent No. 1,402,309 by making, using and selling, pistons like defendants' Exhibits 1, 8, 9, BBB, CCC and 3-O with respect to the claims of said patent specifically set out with relation to each exhibit in the said items of plaintiffs' proposed conclusions. (For evidence, see that cited in Exceptions Nos. 50 and 57, supra.)

[fol. 1228] Exception No. 109

Plaintiffs object and except to the failure and refusal of the Master to adopt as his conclusion of law the substance of Items 1 and 2 on page 11 of Plaintiffs' Proposed Conclusions of Law to the effect that Schmiedeknecht was the original, first and sole inventor of the invention described and claimed in the Schmiedeknecht patent No. 1,256,265, and that the said patent is valid and sufficient in law, particularly as to claims 1 and 3 thereof. (For evidence, see that cited in Exceptions Nos. 3, 34 and 35, supra.)

Exception No. 110

Plaintiffs object and except to the Master's failure and refusal to adopt as his conclusion of law the substance of Item 3 on page 11 of Plaintiffs' Proposed Conclusions of Law to the effect that defendants have infringed claims 1 and 3 of the Schmiedeknecht patent in suit by making, using, and selling pistons like defendants' Exhibit 1. (For evidence, see that cited in Exceptions Nos. 52 and 58, supra.)

Exception No. 111

Plaintiffs object and except to the failure and refusal of the Master to adopt as his conclusion of law that the plaintiffs are entitled to the relief prayed for in each Bill of Complaint, and their costs in these suits to be taxed.

And plaintiffs file their foregoing Exceptions this 26th day of February, 1934.

Wm. C. McCoy, F. O. Richey, Solicitors for Plaintiffs. Evans & McCoy, Richey & Watts, Of Counsel for Plaintiffs.

Service of a copy of the foregoing, Plaintiffs' Exceptions to the Report of the Special Master, acknowledged this 26th day of February, 1934.

Kwis, Hudson & Kent, Solicitors for Defendants.

[fol. 1229] IN UNITED STATES DISTRICT COURT

Memorandum on Exceptions to Master's Report

Filed July 6, 1934

[Case No. 4045]

JONES, J.:

Upon due consideration and review of the issues and matters involved and heard before the Master in these three cases, and from a consideration of the full report of the Master, and the more than ample briefs of the parties, it is the judgment of the Court that the exceptions to the report of the Master be overruled; that the findings and conclusions of the Master be approved and adopted as those of the Court; and that the report of the Master be confirmed.

The principle reasserted in the opinion of the Supreme Court in Radio Corporation of America vs. Radio Engineering Laboratories, Inc., 54 Supreme Court 752, has been noted in considering the weight to be given the earlier decisions of the Patent Office tribunals in respect of some phases of prior invention and public use. If the application of such principle is thought to be pertinent here and persuasive as against the Master's report, the eye, the understanding, and the record in the cases, in my opinion, supply the necessary weight to overcome the heavy burden cast upon the defendants.

Due exceptions may be entered for the plaintiffs, and findings and conclusions in accordance with the Master's report may be prepared and presented.

Jones, U. S. District Judge.

July 6th, 1934.

[fol. 1230] IN UNITED STATES DISTRICT COURT

Final Decree

Filed July 27, 1934

[Case No. 4045]

This cause having been referred to Wm. B. Woods, Esquire, of Cleveland, Ohio, as Special Master, by an

Order of this Court made September 14, 1932; said cause having come to be heard before said Special Master on the pleadings and proofs and after oral arguments made and briefs submitted by counsel for plaintiffs and counsel for defendant, said Special Master having, on January 27, 1934, reported to this Court his Findings of Fact, Conclusions of Law, and his Memorandum; and plaintiffs having filed their exceptions to the Report of the Special Master and briefs having been submitted by counsel for plaintiffs and counsel for defendants;

Thereupon, upon due consideration and review of the issues and matters involved and heard before the Master, and from a consideration of the full Report of the Master and the briefs of the parties;

It Is Ordered, Adjudged and Decreed as follows:

I

That Plaintiffs' Exceptions to the Report of the Master be overruled; that the Findings of Fact and Conclusions of Law of the Master be approved and adopted as those of this Court, and that the Report of the Master be in all respects confirmed; but that due exceptions be entered for the plaintiffs.

That the Bill of Complaint in this cause filed by plaintiffs against defendant be, and the same hereby is, dismissed on the merits for want of equity as to each and all of the patents in suit and at plaintiffs' costs, that the costs be taxed by this Clerk of this Court and that defendant have execution therefor as at law.

Jones, United States District Judge.

Cleveland, Ohio, July 26, 1934.

Approved as to form.

Evans & McCoy, Attorneys for Plaintiffs. Kwis, Hudson & Kent, Attorneys for Defendant.

[fol. 1231] In United States District Court

Petition for Appeal

Filed October 17, 1934

[Case No. 4045]

Your petitioners, the above named Plaintiffs, The Cleveland Trust Company and Chrysler Corporation, each feel-

ing itself aggrieved by the decree made and entered herein on the 27th day of July, 1934, dismissing the above entitled cause, do hereby severally and do hereby jointly appeal from said decree to the United States Circuit Court of Appeals for the Sixth Circuit for the reasons specified in the assignment of errors which is filed herewith, and each and both pray that such appeal be allowed and that a citation issue as provided by law and that a transcript of the record, proceedings, documents and exhibits upon which said decree was based, be duly authenticated and transmitted to the United States Circuit Court of Appeals for the Sixth Circuit.

Your petitioners further pray that the amount of security to be furnished by the plaintiffs may be fixed by the order allowing this appeal.

Wm. C. McCoy, F. O. Richey, Solicitors for Plaintiffs, The Cleveland Trust Company, and Chrysler Corporation.

Service of the above petition and of the accompanying assignment of errors, and receipt of copies of the same, is acknowledged this 17th day of October, 1934.

Kwis, Hudson & Kent, Solicitors for Defendant.

IN UNITED STATES DISTRICT COURT

Order Allowing Appeal

Entered October 17, 1934

[Case No. 4045]

On petition by Plaintiffs, The Cleveland Trust Company and Chrysler Corporation, for allowance of appeal to the United States Circuit Court of Appeals for the Sixth Circuit from the decree entered in the above entitled cause on the 27th day of July, 1934, the petition is granted and it is [fol. 1232] ordered that the appeal be and the same is hereby allowed, upon giving a bond as required by law, and that a certified transcript of the record be forthwith transmitted to the United States Circuit Court of Appeals for the Sixth Circuit.

It is further ordered that the bond on appeal be fixed at the sum of $500.00.

Jones, U. S. District Judge.

Cleveland, Ohio, October —, 1934.

Service of the above order and receipt of a copy of the same is acknowledged this — day of October, 1934.

—— ——, —— ——, Solicitors for Defendant.

In United States District Court

Assignment of Errors

Filed October 17, 1934

[Case No. 4045]

Now come plaintiffs, The Cleveland Trust Company and Chrysler Corporation, and present with their accompanying petition for appeal from the final decree entered herein, the following assignment of errors, which are hereinafter grouped with respect to subject matter:

Group A

Assignment of errors relating to the validity of Gulick patent No. 1,815,733.

1. The Court erred in failing to find and hold the Gulick patent No. 1,815,733 good and valid in law, particularly as to claims 1, 11, 12, 13, 15, 18, 30, 33, 35, 38, 41, 42 and 43 [fol. 1233] thereof, and in failing to sustain plaintiffs' exceptions Nos. 2, 3 and 101.

2. The Court erred in approving and adopting the Special Master's finding of fact No. 11, and in not sustaining plaintiffs' exception (No. 1) to the following statements in the said finding of fact No. 11:

(a) "That the pistons of the Gulick patent embodies the fundamental structure of the Franquist patent No. 1,153,902

(b) and that the piston of the Franquist patent is operative to substantially compensate for expansion

(c) that the piston of the Gulick patent employs essentially the webs of the Spillman & Mooers patent No.

1,092,870 and of the Chenard & Walcker French patent No. 468,595 * * *

(d) that the web construction of the Gulick patent differentiates from those of Spillman & Mooers and Chenard & Walcker simply in matter of design involving mechanical skill

(e) that splitting of the skirts of the Franquist, Spillman & Mooers and Chenard & Walcker patents by through slotting was within the purview of one skilled in the art."

3. The Court erred in approving and adopting the Special Master's conclusion of law No. 12,

"That the Gulick patent is invalid and void as to all claims in issue for want of invention."

and in not sustaining plaintiffs' exception No. 64 to the aforesaid conclusion of law.

4. The Court erred in approving and adopting the Special Master's conclusion of law No. 34,

"That the piston disclosure in the Schoengarth patent 1,174,092 was in public use and on sale in this country for more than two years prior to Gulick's application for patent."

and in not sustaining plaintiffs' exception (No. 86) to the aforesaid conclusion of law No. 34.

5. The Court erred in approving and adopting the Special Master's conclusion of law No. 35,

"That a piston of the construction disclosed in the Schoengarth patent 1,174,092, but without the adjusting [fol. 1234] devices, was in public use and on sale in this country for more than two years prior to Gulick's application for patent."

and in not sustaining plaintiffs' exception (No. 87) to the aforesaid conclusion of law No. 35.

6. The Court erred in approving and adopting the Special Master's conclusions of law Nos. 16 and 17, that the Gulick patent is invalid and void as to all claims in issue because of pistons

"* * * (b) in public use and on sale in this country by Walter L. Schoengarth, more than two years prior to Gulick's application for patent,"

and for want of invention over such pistons, and in not sustaining plaintiffs' exceptions (Nos. 68 and 69) to the aforesaid conclusions of law Nos. 16 and 17.

7. The Court erred in approving and adopting the Special Master's finding of fact No. 36,

"That for more than two years prior to the application of the patent in suit, Walter L. Schoengarth made and sold at Ironwood, Michigan, pistons of the construction shown and described in the Schoengarth patent 1,174,092 but omitting the adjusting device; that such pistons functioned to compensate for expansion; that any reduction of head diameter to circumferential slot was a matter within the purview of a skilled mechanic; and that the Schoengarth pistons were publicly used and sold in this country more than two years prior to Gulick's application for patent. That for more than two years prior to the application of the patent in suit, Walter L. Schoengarth made and sold at Ironwood, Michigan, pistons of the construction shown and described in the Schoengarth patent 1,174,092. That the testimony of Schoengarth is reasonably corroborated, satisfactory and reliable. That the omission of the adjusting devices is within the purview of any skilled mechanic."

and in not sustaining plaintiffs' exception (No. 40) to the aforesaid finding of fact No. 36.

8. The Court erred in approving and adopted the Special Master's finding of fact No. 35 and in not sustaining plaintiffs' exception (No. 38) to the following statements in the aforesaid finding of fact No. 35:

[fol. 1235] (a) "That the Monckmeier pistons, Exhibits 3-V and 3-W, were in use by Gustave C. Monckmeier in this country in his automobile, for more than two years prior to the Gulick application for patent; that such pistons embodied a T-slot disposed intermediate the wrist pin bosses with the horizontal of the T below the bottom ring land and with the vertical of the T intermediate the bosses.

(b) that such T-slotting functioned to compensate for expansion; that any reduction in head diameter to the horizontal slot involved mere mechanical skill;

(c) that such use of the Monckmeier pistons more than two years prior to the application of the Gulick patent in suit was open and not in secret but known to others and in fact public; and

(d) that the testimony of Monckmeier and his corroborating witnesses is reasonably satisfactory and reliable."

9. The Court erred in approving and adopting the Special Master's conclusion of law No. 33:

"That the Monckmeier pistons, Exs. 3-V and 3-W were in public use in this country for more than two years prior to Gulick's application for patent."

and in not sustaining plaintiffs' exception (No. 85) to the aforesaid conclusion of law No. 33.

10. The Court erred in approving and adopting the Special Master's conclusions of law Nos. 16 and 17, that the Gulick patent is invalid and void as to all claims in issue because of pistons

"* * * (a) in public use in this country by Gustave C. Monckmeier more than two years prior to Gulick's application for patent * * *"

and for want of invention over such pistons, and in not sustaining plaintiffs' exceptions Nos. 68 and 69 to the aforesaid conclusions of law Nos. 16 and 17.

11. The Court erred in approving and adopting the Special Master's finding of fact No. 12, and in not sustaining plaintiff's exception (No. 4) to the following statements and conclusions contained in the aforesaid finding of fact No. 12,

[fol. 1236] "That by admissions of plaintiffs' witness, Gulick, Gulick abandoned and had in public use in this country during the year 1911, a piston exemplified by Exhibit 48, and during the year 1914, a piston exemplified by Exhibit 51; * * *."

12. The Court erred in approving and adopting the Special Master's conclusion of law No. 31,

"That the Gulick 1911 piston, Ex. 48, was in public use in this country by Gulick for more than two years prior to his application for patent."

and in not sustaining plaintiffs' exception (No. 33) to the aforesaid conclusion of law No. 31.

13. The Court erred in approving and adopting the Special Master's conclusion of law No. 32,

"That the Gulick 1914 piston, Ex. 51, was in public use in this country by Gulick for more than two years prior to his application for patent."

and in not sustaining plaintiffs' exception (No. 84) to the aforesaid conclusion of law No. 32.

14. The Court erred in approving and adopting the statements in the Special Master's conclusions of law Nos. 13 and 14, that the Gulick patent is invalid and void as to claims 1, 4, 15, 25, 27, 28, 33, 34, 36, 38, 42 and 43, because

"* * * (b) of public use by Gulick in this country more than two years prior to his application for patent."

and as to all other claims in issue for want of invention over such pistons, and in not sustaining plaintiffs' exceptions (Nos. 65 and 66) to the aforesaid conclusions of law Nos. 13 and 14.

15. The Court erred in approving and adopting the Special Master's finding of fact No. 34 and in not sustaining plaintiffs' exception (No. 36) to the Special Master's use of the word "admission" in his finding of fact No. 34, and to the following statement and conclusion contained in said finding of fact No. 34,

(a) "* * * that the piston Exhibit 51 was not given a block test for the reason given by Gulick that he was satisfied with previous tests. * * *"

16. The Court erred in approving and adopting the Special Master's conclusion of law No. 15 and in not sustaining [fol. 1237] plaintiffs' exception (No. 67) to the following statement in the Special Master's conclusion of law No. 15:

"That the Gulick patent is destroyed and invalid in toto, because * * * (c) of failure to describe and claim as required by Sec. 4888 R. S."

17. The Court erred in approving and adopting the Special Master's finding of fact No. 16,

"That the Gulick patent does not describe in sufficient detail to enable one skilled in the art to reproduce the same, the length and thickness of the webs required to secure flexibility."

and in not sustaining plaintiffs' exception (No. 11) to the aforesaid finding of fact No. 16.

18. The Court erred in approving and adopting the Special Master's conclusion of law No. 15,

"That the Gulick patent is destroyed and invalid in toto, because (a) of the attempt to broaden the original application as against intervening rights, * * *"

and in not sustaining plaintiffs' exception (No. 67) to the aforesaid conclusion of law No. 15.

19. The Court erred in approving and adopting the Special Master's finding of fact No. 34 and in not sustaining plaintiffs' exception (No. 36) to the following statement and conclusion embodied in the aforesaid finding of fact No. 34.

(b) "* * * that no effort was made to place the embodiments of the 1911 and 1914 pistons in the application of the Gulick patent. * * *"

20. The Court erred in approving and adopting the Special Master's conclusion of law No. 29,

"That the Gulick 1911 piston, Ex. 48, was abandoned to the public by Gulick, plaintiff and intervening privities in title."

and in not sustaining plaintiffs' exception (No. 81) to the aforesaid conclusion of law No. 29.

21. The Court erred in approving and adopting the Special Master's conclusion of law No. 30:

"That the Gulick 1914 piston, Ex. 51, was abandoned to the public by Gulick, plaintiff and intervening privities in title."

[fol. 1238] and in not sustaining plaintiffs' exception (No. 82) to the aforesaid conclusion of law No. 30.

22. The Court erred in approving and adopting the Special Master's conclusions of law Nos. 13 and 14 and in not

sustaining plaintiffs' exceptions (Nos. 65 and 66) to the statements in the Special Master's conclusions of law Nos. 13 and 14, in substance that the Gulick patent is invalid and void as to the claims in issue because the Gulick invention was abandoned—at large—to the public by Gulick and plaintiffs and intervening privities in title and for want of invention over pistons abandoned by Gulick and plaintiffs and intervening privities in title.

23. The Court erred in approving and adopting the Special Master's finding of fact No. 15,

"That after the filing of the Gulick application, his application was materially modified, both as to the specification and claims without warrant therefor in the original disclosure."

and in not sustaining plaintiffs' exception (No. 9) to the aforesaid finding of fact No. 15.

24. The Court erred in approving and adopting the Special Master's conclusion of law No. 15 and in not sustaining plaintiffs' exception (No. 67) to the following holding in the Special Master's conclusion of law No. 15:

"That the Gulick patent is destroyed and invalid in toto because, * * * (b) of material changes in the specification and claims after filing, * * *."

25. The Court erred in approving and adopting the Special Master's finding of fact No. 14,

"That the Gulick specification, while pending in the Patent Office, was broadened beyond the original disclosure while pistons were produced, used, and sold by the following parties:

Elmer C. Long, Gustave C. Monckmeier, Walter L. Schoengarth, Albert L. Spillman, Kant-Skore Mfg. Co., Stephen D. Hartog, Frank Jardine, Aluminum Co. of America, Howard E. Maynard, Maxwell Motor Co., Ray Day, William E. Venner",

[fol. 1239] and in not sustaining plaintiffs' exceptions (Nos. 5 and 6) to the aforesaid finding of fact No. 14.

26. The Court erred in approving and adopting the Special Master's conclusion of law No. 36,

"That the sale and use of pistons and activities in the production and development of pistons by the following parties constitute adverse and intervening rights as against Gulick, plaintiffs and intervening privities in title of the Gulick patent in suit: Elmer C. Long, Gustave C. Monckmeier, Walter L. Schoengarth, Albert L. Spillman and Kant-Skore Mfg. Co., Stephen D. Hartog, Frank Jardine and Aluminum Company of America, Howard E. Maynard and Maxwell Motor Co., Ray Day, William E. Venner, W. K. Weems and Charles Chadwick."

and in not sustaining plaintiffs' exception (No. 88) to the aforesaid conclusion of law No. 36.

27. The Court erred in approving and adopting the Special Master's finding of fact No. 37 and in not sustaining the plaintiffs' exception (No. 42) to the following statements and conclusions in the Special Master's finding of fact No. 37:

"That one Elmer C. Long, in March, 1916 exhibited to Louis Stellman and William Venner at Syracuse, New York, a six slotted piston of the construction shown by Exhibits Y and A respectively. That six slotted pistons of the construction shown in Exhibit A and also in Exhibit F were sold by Long to Venner while Venner was at South Bend, Indiana, as early as 1917, and that during the year 1917 Venner sold such pistons as replacements in Franklin automobiles; and that Venner continued to sell such pistons furnished him by Long and of the construction shown in Exhibits E, F and G from 1918 to 1926. That a piston of the construction shown in the Long patent 1,395,441 with a T-slot was tested at Franklin Automobile Co., at Syracuse, New York, July, 1918 as admitted by plaintiffs' witness, Burns. That during the year 1918, Elmer C. Long manufactured and sold six-slotted pistons of the construction shown in Exhibits E, F, G and R for replacement in automobiles and that such pistons were actually used during the [fol. 1240] year 1918 in automobiles; * * * That the Long pistons of 1917-1926 were successful pistons and from 1917 to 1922 were the only commercial pistons which automatically compensated for expansion. * * *"

Group B

Assignment of errors relating to infringement of the Gulick patent in suit.

28. The Court erred in not holding that defendant has infringed the Gulick patent No. 1,815,733, particularly as to claims 1, 11, 12, 13, 15, 18, 30, 33, 35, 38, 41, 42 and 43 thereof, and in failing to sustain plaintiffs' exceptions Nos. 45 and 102.

29. The Court erred in approving and adopting the Special Master's finding of fact No. 38.

"That defendants' pistons, Ex. 1, * * * do not embody the structure, function and mode of operation of the Gulick patent in suit."

and in not sustaining plaintiffs' exception (No. 44) to the aforesaid finding of fact No. 38.

30. The Court erred in approving and adopting the Special Master's finding of fact No. 43 and in not sustaining plaintiffs' exception (No. 54) to the following statements and conclusions in the aforesaid finding of fact No. 43:

(a) "* * * that the prior art requires restriction of the (Gulick) patent to the employment of webs which are of sufficient length and thinness to permit flexing of those webs at the top of the skirt; and

(b) that Exhibit 1 does not employ such characteristic webs * * *."

31. The Court erred in approving and adopting the Special Master's finding of fact No. 48,

"That in Ex. 1 automatic compensation is accomplished by what has been termed the 'Keystone relief' and not by any web flexibility at the top; * * * and that such a construction and arrangement does not secure the operation contemplated by the Gulick, Jardine and Maynard patents."

[fol. 1241] and in not sustaining plaintiffs' exception (No. 59) to the aforesaid finding of fact No. 48.

32. The Court erred in approving and adopting the Special Master's finding of fact No. 51,

"That defendants' pistons, Exs. 1, * * * employ the essential structure, function and mode of operation of the prior art, more particularly the Franquist patent No. 1,153,-

902 and Exs. 8 and 9, also the Chenard & Waicker French patent No. 468,595."

and in not sustaining plaintiffs' exception (No. 62) to the aforesaid finding of fact No. 51.

33. The Court erred in approving and adopting the Special Master's conclusion of law No. 37,

"that defendant's pistons, Exs. 1, * * * do not infringe the Gulick patent in suit."

and in not sustaining plaintiffs' exception (No. 89) to the aforesaid conclusion of law.

Group C

Assignment of errors relating to validity of the Jardine patent No. 1,763,523.

34. The Court erred in failing to find and hold the Jardine patent No. 1,763,523 good and valid in law, particularly as to claims 1, 2, and 4 to 11, inclusive, thereof, and in failing to sustain plaintiffs' exceptions Nos. 16 and 103.

35. The Court erred in approving and adopting the Special Master's finding of fact No. 17 and in not sustaining plaintiffs' exception (No. 13) to the following statements in the Special Master's finding of fact No. 17:

(a) "That the Jardine patent embodies the fundamental structure of Franquist patent No. 1,153,902,

(b) that it employs essentially the slipper piston structure of the Ricardo patent No. 1,294,833, and

(c) that the splitting of the slippers of the Ricardo patent was within the purview of one skilled in the art."

36. The Court erred in approving and adopting the Special Master's finding of fact No. 18,

[fol. 1242] "That the Jardine patent piston differs from the piston of the Long patent No. 1,872,772 in matters involving mere mechanical skill."

and in not sustaining plaintiffs' exception (No. 14) to the aforesaid finding of fact No. 18.

37. The Court erred in approving and adopting the Special Master's finding of fact No. 19,

"That the Jardine piston differs from the piston of the Gulick patent in matters involving mere mechanical skill."

and in not sustaining plaintiffs' exception (No. 15) to the aforesaid finding of fact No. 19.

38. The Court erred in approving and adopting the Special Master's conclusion of law No. 19,

"That the Jardine patent is invalid as to all claims in issue for want of invention over the prior art."

and in not sustaining plaintiffs' exception (No. 71) to the aforesaid conclusion of law No. 19.

39. The Court erred in approving and adopting the Special Master's finding of fact No. 20,

"That the Jardine patent does not describe in sufficient detail to enable one skilled in the art to reproduce the same, the length and thickness of the webs required to secure flexibility."

and in not sustaining plaintiffs' exception (No. 17) to the aforesaid finding of fact No. 20.

40. The Court erred in approving and adopting the Special Master's conclusion of law No. 20,

"That the Jardine patent is invalid as to all claims in issue because of failure to describe and claim as required by Sec. 4888 R. S."

and in not sustaining plaintiffs' exception (No. 72) to the aforesaid conclusion of law No. 20.

Group D

Assignment of errors relating to infringement of Jardine patent in suit.

41. The Court erred in not holding that defendant has infringed the Jardine patent No. 1,763,523, particularly as [fol. 1243] to claims 1, 2 and 4 to 11, inclusive, thereof, and in failing to sustain plaintiffs' exceptions Nos. 47 and 104.

42. The Court erred in approving and adopting the Special Master's finding of fact No. 39,

"That defendant's pistons, Exhibit 1, * * * do not embody the structure, function and mode of operation of the Jardine patent in suit."

and in not sustaining plaintiffs' exception (No. 46) to the aforesaid finding of fact No. 39.

43. The Court erred in approving and adopting the Special Master's finding of fact No. 44 and in not sustaining plaintiffs' exception (No. 55) to the following statements and conclusions in finding of fact No. 44:

(a) "* * * that the prior art requires restriction of the patent (Jardine) to the employment of webs which are of sufficient lengths and thinness to permit flexing of these webs at the top of the skirt;" and

(b) that Ex. 1 does not employ such characteristic webs."

44. The Court erred in approving and adopting the Special Master's conclusion of law No. 38,

"That defendants' pistons, Exs. 1, * * * do not infringe the Jardine patent in suit."

and in not sustaining plaintiffs' exception (No. 90) to the aforesaid conclusion of law No. 38.

Group E

Assignment of errors relating to validity of the Maynard patent No. 1,655,968.

45. The Court erred in failing to find and hold the Maynard patent No. 1,655,968 good and valid in law as to all claims thereof, and in failing to sustain plaintiffs' exceptions Nos. 26 and 105.

46. The Court erred in approving and adopting the Special Master's finding of fact No. 21 and in not sustaining plaintiffs' exception (No. 19) to the following statements in the Special Master's finding of fact No. 21:

"The Maynard patent embodies the fundamental structure of the Franquist patent No. 1,153,902, and that the [fol. 1244] splitting of the skirt by through and through slotting was within the purview of one skilled in the art."

47. The Court erred in approving and adopting the Special Master's finding of fact No. 22,

"That the Maynard patent differs from the piston of the Jardine patent 1,763,523 in matters involving mere mechanical skill."

and in not sustaining plaintiffs' exception (No. 20) to the aforesaid finding of fact No. 22.

48. The Court erred in approving and adopting the Special Master's finding of fact No. 23,

"That the Maynard patent piston differs from the piston of the Long patent 1,395,441 in matters involving mere mechanical skill."

and in not sustaining plaintiffs' exception (No. 21) to the aforesaid finding of fact No. 23.

49. The Court erred in approving and adopting the Special Master's finding of fact No. 24,

"That the Maynard patent piston differs from the piston of the Gulick patent in matters involving mere mechanical skill."

and in not sustaining plaintiffs' exception (No. 22) to the aforesaid finding of fact No. 24.

50. The Court erred in approving and adopting the Special Master's finding of fact No. 25,

"That the Maynard patent piston differs from the piston of the Schmiedeknecht patent in matters involving mere mechanical skill."

and in not sustaining plaintiffs' exception (No. 23) to the aforesaid finding of fact No. 25.

51. The Court erred in approving and adopting the Special Master's finding of fact No. 26,

"That the Maynard patent piston differs from the piston of the Ricardo patent No. 1,294,883 in matters involving mere mechanical skill."

and in not sustaining plaintiffs' exception (No. 24) to the aforesaid finding of fact No. 26.

52. The Court erred in approving and adopting the Special Master's finding of fact No. 27,

[fol. 1245] "That the Maynard patent piston differs from the piston of the Hives patent 140,998 in matters involving mere mechanical skill."

and in not sustaining plaintiffs' exception (No. 25) to the aforesaid finding of fact No. 27.

53. The Court erred in approving and adopting the Special Master's conclusion of law No. 22,

"That the Maynard patent is invalid and void as to all claims in issue for want of invention over the prior art"

and in not sustaining plaintiffs' exception (No. 74) to the aforesaid conclusion of law No. 22.

54. The Court erred in approving and adopting the Special Master's conclusion of law No. 23,

"That the Maynard patent is invalid as to all claims in issue because of failure to describe and claim as required by R. S. Sec. 4888,"

and in not sustaining plaintiffs' exception (No. 75) to the aforesaid conclusion of law No. 23.

Group F

Assignment of errors relating to infringement of Maynard patent in suit.

55. The Court erred in failing to find and hold that defendant has infringed the Maynard patent No. 1,655,968, and in failing to sustain plaintiffs' exceptions Nos. 49 and 106.

56. The Court erred in approving and adopting the Special Master's finding of fact No. 40,

"That defendant's pistons, Ex. 1, * * * do not embody the structure, function and mode of operation of the Maynard patent in suit."

and in not sustaining plaintiffs' exception (No. 48) to the aforesaid finding of fact No. 40.

57. The Court erred in approving and adopting the Special Master's finding of fact No. 45 and in not sustain-

ing plaintiffs' exception (No. 56) to the following statements in the Special Master's finding of fact No. 45:

(a) "That the Maynard patent in suit describes a piston structure in which automatic compensation is not secured unless the groove E is cut into the webs F sufficiently and [fol. 1246] beyond the inside of the piston head flange to secure web extensions at the top of sufficient length and thinness to permit flexing of these web extensions at the top of the skirt; and

(b) that Ex. 1 does not employ such characteristic webs."

58. The Court erred in approving and adopting the Special Master's conclusion of law No. 39,

"That the defendant's pistons, Ex. 1, * * * do not infringe the Maynard patent in suit."

and in not sustaining plaintiffs' exception (No. 91) to the aforesaid conclusion of law No. 39.

Group G

Assignment of errors relating to validity of Mooers patent No. 1,402,309.

59. The Court erred in failing to find and hold that Mooers patent No. 1,402,309 is good and valid in law, particularly as to claims 1 to 4 inclusive, 6, 8, 10 and 11 thereof, and in failing to sustain plaintiffs' exceptions Nos. 31 and 107.

60. The Court erred in approving and adopting the Special Master's finding of fact No. 28,

"That the Mooers patent embodies the fundamental structure of the Franquist patent No. 1,153,902 and that the employment of narrow connectors was within the purview of one skilled in the art."

and in not sustaining plaintiffs' exception (No. 27) to the aforesaid finding of fact No. 28.

61. The Court erred in approving and adopting the Special Master's finding of fact No. 29,

"That the Mooers patent piston differs from the piston of the Spillman & Mooers patent No. 1,092,870 in suit in matters involving mere mechanical skill."

and in not sustaining plaintiffs' exception (No. 28) to the aforesaid finding of fact No. 29.

62. The Court erred in approving and adopting the Special Master's finding of fact No. 30,

"That the Mooers patent piston differs from the piston of the Chenard & Walcker patent No. 468,595 in matters [fol. 1247] involving mere mechanical skill."

and in not sustaining plaintiffs' exception (No. 29) to the aforesaid finding of fact No. 30.

63. The Court erred in approving and adopting the Special Master's finding of fact No. 31,

"That the Mooers patent piston differs from the piston of the Gulick 1911 and 1914 pistons (Exhibits 48 and 51) in matters involving mere mechanical skill."

and in not sustaining plaintiffs' exception (No. 30) to the aforesaid finding of fact No. 31.

64. The Court erred in approving and adopting the Special Master's conclusion of law No. 25,

"That the Mooers patent is invalid and void as to all claims in issue for want of invention over the prior art."

and in not sustaining plaintiffs' exception (No. 77) to the aforesaid conclusion of law No. 25.

65. The Court erred in approving and adopting the Special Master's finding of fact No. 32,

"That after the filing of the Mooers application, his application was materially modified both as to specification and claims without warrant therefor in the original disclosure."

and in not sustaining plaintiff's exception (No. 32) to the aforesaid finding of fact No. 32.

66. The Court erred in approving and adopting the Special Master's conclusion of law No. 26, which is as follows:

"That the Mooers patent is destroyed and invalid in toto because (a) of the attempt to broaden the original application as against intervening rights, (b) of material changes

in the specification and claims after filing, and (c) of failure to describe and claim as required by Sec. 4888 R. S."

and in not sustaining plaintiffs' exception (No. 78) to the aforesaid conclusion of law No. 26.

[fol. 1248] Group H

Assignment of errors relating to infringement of Mooers patent in suit.

67. The Court erred in failing to find and hold that defendant has infringed the Mooers patent No. 1,402,309, and in failing to sustain plaintiffs' exceptions Nos. 51 and 108.

68. The Court erred in approving and adopting the Special Master's finding of fact No. 41,

"That defendant's pistons, Ex. 1, • • • do not embody the structure, function and mode of operation of the Mooers patent in suit."

and in not sustaining plaintiffs' exception (No. 50) to the aforesaid finding of fact No. 41.

69. The Court erred in approving and adopting the Special Master's finding of fact No. 46 and in not sustaining plaintiffs' exception (No. 57) to the following statements and conclusions included in the Special Master's finding of fact No. 46:

(a) " • • • that the prior art requires such a restriction; (of the connectors from the head to the top of the skirt in the Mooers patent to narrow connectors of restricted cross sections);

(b) that in Ex. 1 • • • the connectors are heavy and not of a structure as described in the Mooers patent • • •."

70. The Court erred in approving and adopting the Special Master's conclusion of law No. 40,

"That defendant's pistons, Ex. 1, • • • do not infringe the Mooers patent in suit."

and in not sustaining plaintiffs' exception (No. 92) to the aforesaid conclusion of law No. 40.

Group I

Assignment of errors relating to the validity of Schmiedeknecht patent No. 1,256,265.

71. The Court erred in failing to find and hold the Schmiedeknecht patent No. 1,256,265 good and valid in law, particularly as to claims 1 and 3 thereof, and in failing to sustain plaintiffs' exceptions Nos. 35 and 109.

72. The Court erred in approving and adopting the Special Master's finding of fact No. 33 and in not sustaining [fol. 1249] plaintiffs' exception (No. 34) to the following statements in the Special Master's finding of fact No. 33:

(a) "That the Schmiedeknecht patent involves the fundamental structure of the Franquist patent No. 1,153,902 or of any trunk piston; and

(b) that it employs essentially the construction and arrangement of webs and mounting of wrist pin bosses of the Pugh British patent 17,256 of 1907 and the arrangement of the webs of the Ferry British patent No. 12,772 of 1914; and that the construction of the Schmiedeknecht patent differs from those of the Pugh and Ferry patents and from a trunk piston in matters of design involving mere mechanical skill."

73. The Court erred in approving and adopting the Special Master's conclusion of law No. 28,

"That the Schmiedeknecht patent is invalid and void as to all claims in issue for want of invention over the prior art."

and in not sustaining plaintiffs' exception (No. 80) to the aforesaid conclusion of law No. 28.

Group J

Assignment of errors relating to infringement of the Schmiedeknecht patent in suit.

74. The Court erred in failing to find and hold that defendant has infringed the Schmiedeknecht patent No. 1,256,-265, particularly as to claims 1 and 3 thereof, and in failing to sustain plaintiffs' exceptions Nos. 53 and 110.

75. The Court erred in approving and adopting the Special Master's finding of fact No. 42,

"That defendants' piston, Ex. 1, does not embody the structure, function and mode of operation of the Schmiedeknecht patent in suit."

and in not sustaining plaintiffs' exception (No. 52) to the aforesaid finding of fact No. 42.

76. The Court erred in approving and adopting the Special Master's finding of fact No. 47, and in not sustaining plaintiffs' exception (No. 58) to the following statements and conclusions in the aforesaid finding of fact No. 47:

[fol. 1250] " • • • that in Ex. 1 each wrist pin boss is supported intermediate its ends on the web and not as described and claimed in the Schmiedeknecht patent."

77. The Court erred in approving and adopting the Special Master's conclusion of law No. 41,

"That defendant's piston, Ex. 1, does not infringe the Schmiedeknecht patent in suit."

and in not sustaining plaintiffs' exception (No. 93) to the aforesaid conclusion of law No. 41.

Group K

General Assignment of Errors

78. The Court erred in confirming the Report of the Special Master.

79. The Court erred in not granting plaintiffs the relief prayed for in the Bill of Complaint. (Plaintiffs' exceptions Nos. 95 and 111.)

80. The Court erred in dismissing the Bill of Complaint. (Plaintiffs' exception No. 96.)

81. The Court erred in assessing the costs of the suit against plaintiffs. (Plaintiffs' exceptions Nos. 97 and 111.)

Wherefore, plaintiffs pray that the said decree may be reversed and for such other and further relief as to the Court may seem just and proper.

Wm. C. McCoy, F. O. Richey, Solicitors for Plaintiffs, The Cleveland Trust Company and Chrysler Corporation.

Dated Oct. 17, 1934.

[fols. 1251-1252] IN UNITED STATES DISTRICT COURT

CITATION—Filed October 20, 1934

[Case No. 4045]

UNITED STATES CIRCUIT COURT OF APPEALS FOR THE SIXTH CIRCUIT

To the Schriber-Schroth Company, Greeting:

You are hereby cited and admonished to be and appear at a session of the United States Circuit Court of Appeals for the Sixth Circuit, to be holden at the City of Cincinnati, in said Circuit, on the * 16th day of November next, pursuant to an appeal filed in the Clerk's office of the District Court of the United States for the Northern District of Ohio, wherein The Cleveland Trust Company, and the Chrysler Corporation are appellants and you are appellee to show cause, if any there be, why the decree rendered against the said appellants as in the said petition for appeal mentioned, should not be corrected, and why speedy justice should not be done to the parties in that behalf.

Witness the Honorable Charles Evans Hughes, Chief Justice of the United States, this 17th day of October in the year of our Lord one thousand nine hundred and thirty-four and of the Independence of the United States of America the one hundred and fifty-ninth.

Paul Jones, Judge of the District Court.

Service of the above citation is hereby acknowledged and appearance of appellee is hereby entered.

Kwis, Hudson & Kent, John H. Bruninga.

October 20, 1934.

[fol. 1253] IN UNITED STATES DISTRICT COURT

BOND ON APPEAL—Filed October 23, 1934

[Case No. 4045]

Know All Men by These Presents, that we, The Cleveland Trust Company and Chrysler Corporation, bodies corporate,

---

* Not exceeding 30 days from day of signing.

as principals, and American Surety Company of New York, 100 Broadway, New York City, a body corporate, as surety, are held and firmly bound unto The Schriber-Schroth Company, of Akron, Ohio, in the full and just sum of $500.00 to be paid to the said The Schriber-Schroth Company, its certain attorneys, successors, or assigns; to which payment well and truly to be made we bind ourselves and our successors, jointly and severally with these presents. Signed with our seals and dated this 22nd day of October, in the year of our Lord, One Thousand Nine Hundred and Thirty-four.

Whereas, lately at a session of the District Court of the United States for the Eastern Division of the Northern District of Ohio, in a suit pending in said Court between The Cleveland Trust Company, Chrysler Corporation, plaintiffs, and The Schriber-Schroth Company, defendant, a decree was entered against the said The Cleveland Trust Company and Chrysler Corporation, and the said plaintiffs have prosecuted an appeal in the United States Circuit Court of Appeals for the Sixth Circuit, to reverse the decree in the aforesaid suit, and a citation directed to the said The Schriber-Schroth Company, citing and admonishing it to be and appear at the United States Circuit Court of Appeals for the Sixth Circuit, at Cincinnati, Ohio, within 30 days from the date of such citation.

Now, the condition of the above obligation is such that if the said The Cleveland Trust Company and Chrysler Corporation shall prosecute said appeal to effect, and answer all damages and costs if they fail to make their appeal good, then the above obligation to be void, otherwise to remain in full force and effect,

The Cleveland Trust Company, by R. A. Malm, Vice President.

(Approved for Execution by The C. T. Co. EBF Ass't Counsel.)

[fol. 1254] Chrysler Corporation, by R. A. Malm, Vice President, The Cleveland Trust Company. (Seal.)

(Approved for Execution by the C. T. Co. EBF Asst. Counsel.)

Sealed and delivered in the presence of: A. J. Perfler, F. J. Haffner.

American Surety Company of New York, by Edw. F. Archer, Resident Vice President. (Seal.)

Attest: R. V. Mellenbrook, Resident Assistant Sec'ty.

This bond is approved this 23rd day of October, 1934.

Jones, U. S. District Judge.

[fols. 1255-1266] In United States District Court

Order Granting Stipulation for Filing Narrative Form Testimony in One Cause With Reference Thereto in Each of Other Two Causes—Entered October 26, 1934 by Paul Jones, Judge

[Case No. 4045]

Pursuant to stipulation filed herein, it is ordered that the plaintiffs need not file separate narrative forms of the evidence in cases Nos. 4045, 4046 and 4047, but that it will be sufficient to file a narrative form in one cause and a reference thereto in each of the other two causes.

Here follows a succession of Orders extending the time for the filing of the transcript of record, the Praecipe, for lodging the statement of evidence, and for filing the printed Transcript in the United States Circuit Court of Appeals, thereby duly extending the times for filing each such matter, and which, by agreement of the parties, need not be included herein.

* * * * * * *

[fol. 1267] In United States District Court

Order Consolidating Appeals in One Printed Transcript of Record, That Exhibits Used Therein May Be Used in Each of Said Causes, and Further Ordering Elimination of Repetition of Similar Pleadings in Each Cause—Entered March 2, 1935 by Paul Jones, Judge

[Case No. 4045]

Pursuant to stipulation filed herein, it is ordered that on the appeals of the above causes the record is to be consoli-

dated in one printed transcript of record and that the exhibits referred to therein may be used in each of said causes.

It is further ordered that where pleadings or other papers appear in substantially the same form in more than one case it will be sufficient to print such papers in the transcript only in one case with suitable references thereto in the other cases, reprinting in such other cases only those portions of the papers which differ from those of the first case.

IN UNITED STATES DISTRICT COURT

STIPULATION RE DIGEST OF EXHIBITS—Filed May 4, 1935

[Case No. 4045]

It is hereby stipulated and agreed by and between counsel for the parties hereto, this Honorable Court consenting, that plaintiffs' documentary exhibits as follows:

2A, 2B, 3A, 3B, 3C, 3D, 4A, 4B, 4C, 4D, 5A, 5B, 5C and 5D, and defendant's documentary exhibits as follows:

X, AA, 4-R, 5-F1 to 5-F12, inclusive, 5-G, 5-H1, 5-H2, 5-H3 and 5-I, be incorporated and printed for the record on ap- [fol. 1268] peal in digest form and that the attached digests of said exhibits be substituted in the printed record for the original of each of the aforesaid.

It is further stipulated and agreed that each of the aforesaid original exhibits, plaintiffs' exhibits 2A, 2B, 3A, 3B, 3C, 3D, 4A, 4B, 4C, 4D, 5A, 5B, 5C and 5D, and defendant's exhibits X, AA, 4-R, 5-F1 to 5-F12, inclusive, 5-G, 5-H1, 5-H2, 5-H3 and 5-I be included among those exhibits withdrawn to be forwarded to the Clerk of the Circuit Court of Appeals for the Sixth Circuit for the hearing on appeal in accordance with the stipulation on that matter.

Dated: April 6, 1935.

Evans & McCoy, Solicitors for Plaintiffs.

Dated: May 1, 1935.

John H. Bruninga, Counsel for Defendant.

It is so ordered. Jones, U. S. District Judge.

IN UNITED STATES DISTRICT COURT

ORDER GRANTING STIPULATION RE DIGEST OF EXHIBITS—
Entered May 4, 1935 by Paul Jones, Judge

[Case No. 4045]

Pursuant to stipulation filed herein, it is ordered that plaintiffs' documentary exhibits as follows:

2A, 2B, 3A, 3B, 3C, 3D, 4A, 4B, 4C, 4D, 5A, 5B, 5C and 5D, and defendant's documentary exhibits as follows:

[fol. 1269] X, AA, 4-R, 5-F1 to 5-F12, inclusive, 5-G, 5-H1, 5-H2, 5-H3 and 5-I, be incorporated and printed for the record on appeal in digest form and that the attached digests of said exhibits be substituted in the printed record for the original of each of the aforesaid.

It is further ordered that each of the aforesaid original exhibits, plaintiffs' exhibits 2A, 2B, 3A, 3B, 3C, 3D, 4A, 4B, 4C, 4D, 5A, 5B, 5C, and 5D, and defendant's exhibits X, AA, 4-R, 5-F1 to 5-F12 inclusive, 5-G, 5-H1, 5-H2, 5-H3 and 5-I be included among those exhibits withdrawn to be forwarded to the Clerk of the Circuit Court of Appeals for the Sixth Circuit for the hearing on appeal in accordance with the stipulation on that matter.

IN UNITED STATES DISTRICT COURT

PRAECIPE—Filed May 6, 1935

[Case No. 4045]

1. Original Bill of Complaint.
2. Defendant's Motion for further and better statement and further particulars.
3. Ruling of Court on motion for particulars.
4. Plaintiffs' Bill of Particulars.
5. Petition of John H. Bruninga for leave to enter special appearance of Sterling Products Corporation, to object to the jurisdiction.
6. Ruling on Petition objecting to jurisdiction.
7. Defendant's Answer.
8. Defendant's Notice of taking depositions.
9. Defendant's Supplemental Notice of taking depositions.

10. Order for reference to and appointment of Special Master.

[fol. 1270] 11. Stipulation consolidating Equity causes 4045, 4046 and 4047 for trial, etc.

12. Defendant's Amendment to Answer.

13. Report of Wm. B. Woods, Special Master.

14. Plaintiffs' Exceptions to Report of Special Master.

15. Court's Memorandum on Plaintiffs' Exceptions to the Master's Report.

16. Final Decree.

17. Petition for Appeal.

18. Assignment of Errors.

19. Order Allowing Appeal.

20. Citation.

21. Stipulation re Narrative of Transcript.

22. Narrative of transcript of testimony.

23. Order approving narrative.

24. Stipulation and order consolidating Record on Appeal.

25. Stipulation re Certification of Record.

26. Appeal Bond.

27. This Praecipe.

28. Clerk's Certificate.

29. Further Orders and documents as may be filed or entered subsequent to the date hereof and pertaining to this Appeal.

30. The following exhibits, or the stipulated digests of exhibits, or the specified portions thereof, are to be printed in the transcript of testimony:

Plaintiffs' Exhibits:

2, 3, 4, 5 and 6;

Stipulated digest of 2A, 2B, 3A, 3B, 3C, 3D, 4A, 4B, 4C, 4D, 5A, 5B, 5C and 5D;

7, 11, 13, 15, 16, 21, 22, 25, 26, 28, 29, 31, 32, 35A to 35E inclusive, 36, 37;

38 (including 38a to 38e inclusive)—This exhibit was also offered as Defendants' Exhibits 4S and 4T;

39 (including 39a to 39g inclusive)—This exhibit was also offered as Defendants' Exhibit 4U;

40—This exhibit was also offered as Defendants' Exhibit 4V;

42A—Omit last 12 lines;

42B—Omit from line 2 to line 35, beginning *"Time for Week"* and ending "one small crack in web" on first sheet;

Omit last 34 lines on second sheet;

[fol. 1271] 42C—Omit first four paragraphs under *"M L 4X 10000 Mile Wear Test."*;

Omit last 12 lines of first page;

Omit first 18 lines of second page;

44, 45, *44, *45, 46, 50, 51, 52, 53, 54, 55, 56, 57, 60 62—(This exhibit identified before offer as Exhibit 33), 63, 64, 65, 66, 67B, 67C, 67D, 68A, 68B, 68C, 69A, 69B, 69C, 70A, 70B, 74, 75, 84 and 85.

Defendants' Exhibits:

A;

C—Two paragraphs entitled "Long Type Pistons";

D—The seven paragraphs under "New Design for Series Nine";

H—Article entitled "The Oval Type Piston";

I—Page 1 and the drawing on page 2 entitled "Drill Jig for Extra Oil Holes in Piston";

J, K, L, M;

N—Page 8, article entitled "Piston Slap" and first 29 lines of page 9;

O, S, T-1, T-2, T-3;

U—M. K. Weems advertisement;

W;

X—Stipulated Digest; (See stipulation)

Y, Z;

AA—Stipulated Digest; (See stipulation)

CC, DD, EE, FF, GG, HH, II, JJ, KK, LL, MM;

3-S—Page 274 to matter entitled "Correspondence" on page 280;

3-X, 4-A, 4-B, 4-C, 4-D, 4-E, 4-F;

4-G—Page 362 to matter entitled "S. S. C. O. Steering Gear Lock" on page 364;

4-H, 4-I;

4-J—Page 602 to matter entitled "Standardization of Insulating Materials Begun in Germany" on page 604;

4-K—Page 558 to end of line 13 of first column on page 560;

4-L, 4-L_1, 4-L_2, 4-L_3, 4-L_4;

4-M—Article entitled "Herschell-Spillman Cross Head Piston," including drawing entitled "The Cross Head Piston";

4-N—Page 1081, the paragraph beginning "The pistons are of original design * * *," first column, line 22, and ending first column, line 36, including the drawing entitled "Cross Section of Premier Motor Head Construction";

[fol. 1272] 4-O—Page 85, beginning line 11 of the second column to end of line 9, first column, page 86, and the drawing on page 86 entitled "The Premier-Weidely Piston";

4-P, 4-Q;

4-R—Stipulated Digest; (See stipulation)

4-X, 4-Y, 4-Z, 5-C, 5D;

5-E—From line 14, first column, beginning "Fig. 2. To prevent piston slap, preferably in," to end of line 4 of the second column, including the drawing, Fig. 2;

5-F_1 to 5-F_{12} inclusive—Stipulated Digest; (See stipulation)

5-G—Stipulated Digest; (See stipulation)

5-H_1, 5-H_2 and 5-H_3—Stipulated Digest; (See stipulation)

5-I—Stipulated Digest; (See stipulation)

Bill of Complaint in The Cleveland Trust Company v. The Simmons Manufacturing Company, in Equity No. 3510;

5-J, 5-K_1, 5-K_2, 5-K_3, 5-K_4, 5-K_5, 5-K_6, 5-K_7, 5-K_8, 5-K_9, 5-K_{11}, 5-K_{12}, and 5-M;

31. Order for withdrawal of exhibits.

Evans & McCoy, Counsel for Plaintiffs-Appellants.

Service of a copy acknowledged this 4th day of May, 1935.

Kwis, Hudson & Kent, Counsel for Defendants-Appellees.

[fols. 1273-1279] In United States District Court

Stipulation re Certification of Record—Filed May 6, 1935

[Case No. 4045]

In accordance with Section 6 of Rule 44 of the general rules of this Court, it is hereby agreed that the record as presented to the Clerk by the printer, may be certified by the Clerk as required by law and the rules of the Appellate Court, as a true, full and complete copy of the original

pleadings, papers and orders used on the trial of this cause, as set forth in the precipe for transcript, without further comparison by the Clerk.

Evans & McCoy, Attorneys for Plaintiffs. Kwis, Hudson & Kent, Attorneys for Defendant.

* * * * * * *

[fol. 1280] In United States District Court

Order for Withdrawal of Exhibits—Entered September 4, 1935

[Case No. 4045]

It having been represented to the Court by the parties herein that plaintiffs' Exhibits 1, 1Z, 2Z, 2A, 2B, 3A, 3B, 3C, 3D, 4A, 4B, 4C, 4D, 5A, 5B, 5C, 5D, 8, 9, 10-A, 12, 14, 17, 20, 23, 24, 30, 34, 42A, 42B, 42C, 43, 47, 48, 49, 58, 59, 61, 71-A, 71-B, 72-A, 72-B, 73, 76, 79, 80, 81, 82, 83, and

Defendants' Exhibits A, B, E, F, G, O, P, P-1, P-2, Q, R, V_1 to V_7 inclusive, W, X, Y, AA, GG-1, HH-1, II-1, II-2, JJ-1, NN, AAA, BBB, CCC, EEE, FFF, 3-G, 3-H, 3-I, 3-J, 3-K, 3-L, 3-M, 3-N, 3-O, 3-P, 3-Q, 3-R, 3-T, 3-V, 3-W, 4-R, 5-F_1 to 5-F_{12} inclusive, 5-G, 5-H_1, 5-H_2, 5-H_3, 5-I, 5-K_{10}, 5-L, filed in this cause, are physical exhibits or otherwise cannot be conveniently duplicated or are needed for inspection as physical exhibits in the United States Court of Appeals for the Sixth Circuit, it is hereby Ordered that the said Exhibits be withdrawn from the files of this Court [fols. 1281-1282] and transmitted under the supervision of the Clerk of this Court to the Clerk of the United States Court of Appeals for the Sixth Circuit at Cincinnati, Ohio, and the Clerk of this Court is hereby directed to withdraw the same from the files and supervise the packing and transmitting thereof to the Court of Appeals.

Jones, United States District Judge.

Consented to: Wm. C. McCoy, Counsel for Plaintiffs. John H. Bruninga, Counsel for Defendants.

In United States District Court

Stipulation re Certification of Record—Filed May 6, 1935

[Case No. 4045]

In accordance with Section 6 of Rule 44 of the general rules of this Court, it is hereby agreed that the record as presented to the Clerk by the printer, may be certified by the Clerk as required by law and the rules of the Appellate Court, as a true, full and complete copy of the original pleadings, papers and orders used on the trial of this cause, as set forth in the precipe for transcript, without further comparison by the Clerk.

Evans & McCoy, Counsel for Plaintiffs. Kwis, Hudson & Kent, Counsel for Defendants.

BLANK PAGE

CLERK'S COPY.

179

402909
Sup Ct

Vol. II

TRANSCRIPT OF RECORD

Supreme Court of the United States

OCTOBER TERM, 1940

No. 9

THE SCHRIBER-SCHROTH COMPANY,
PETITIONER,

vs.

THE CLEVELAND TRUST COMPANY, CHRYSLER CORPORATION

No. 10

THE ABERDEEN MOTOR SUPPLY COMPANY,
PETITIONER,

vs.

THE CLEVELAND TRUST COMPANY, CHRYSLER CORPORATION

No. 11

THE F. E. ROWE SALES COMPANY, PETITIONER,

vs.

THE CLEVELAND TRUST COMPANY, CHRYSLER CORPORATION

ON WRITS OF CERTIORARI TO THE UNITED STATES CIRCUIT COURT OF APPEALS FOR THE SIXTH CIRCUIT

PETITION FOR CERTIORARI FILED JANUARY 16, 1940.

CERTIORARI GRANTED MARCH 25, 1940.

BLANK PAGE

SUPREME COURT OF THE UNITED STATES

OCTOBER TERM, 1940

No. 9

THE SCHRIBER-SCHROTH COMPANY,
PETITIONER,

vs.

THE CLEVELAND TRUST COMPANY, CHRYSLER CORPORATION

No. 10

THE ABERDEEN MOTOR SUPPLY COMPANY,
PETITIONER,

vs.

THE CLEVELAND TRUST COMPANY, CHRYSLER CORPORATION

No. 11

THE F. E. ROWE SALES COMPANY, PETITIONER,

vs.

THE CLEVELAND TRUST COMPANY, CHRYSLER CORPORATION

ON WRITS OF CERTIORARI TO THE UNITED STATES CIRCUIT COURT OF APPEALS FOR THE SIXTH CIRCUIT

VOL. II

INDEX.

Record from D. C. U. S., Northern District of Ohio—Continued

Plaintiffs' Exhibits

Nos.		Original	Print
2.	U. S. Patent No. 1,815,733, July 21, 1931, to E. J. Gulick (patent in suit)	1283	528
3.	U. S. Patent No. 1,763,523, June 10, 1930, to F. Jardine (patent in suit)	1291	537

JUDD & DETWEILER (INC.), PRINTERS, WASHINGTON, D. C., OCTOBER 14, 1940.

Record from D. C. U. S., Northern District of Ohio—Continued

Plaintiffs' Exhibits—Continued

Nos.		Original	Print
4.	U. S. Patent No. 1,655,968, January 10, 1928, to H. E. Maynard (patent in suit)	1299	545
5.	U. S. Patent No. 1,256,265, February 12, 1918, to V. E. Schmiedeknecht (patent in suit)	1305	550
6.	U. S. Patent No. 1,402,309, January 3, 1922, to L. P. Mooers (patent in suit)	1309	554

Stipulated Digest of Assignments of Patents in Suit (Offering of Assignments Omitted from Narrative):

Gulick Patent No. 1,815,733

2-A.	Edward J. Gulick to Packard Motor Car Co. (omitted in printing)	1321	
2-B.	Packard Motor Car Co. to The Cleveland Trust Co. (omitted in printing)	1321	

Jardine Patent No. 1,763,523

3-A.	Frank Jardine to The Aluminum Castings Co.	1321	563
3-B.	The Aluminum Castings Co. to Aluminum Manufactures, Inc.	1321	563
3-C.	Aluminum Manufactures, Inc. to Aluminum Co. of America	1321	563
3-D.	Aluminum Co. of America to The Cleveland Trust Co.	1322	563

Maynard Patent No. 1,655,968

4-A.	Howard E. Maynard to Chrysler Corporation (omitted in printing)	1322	
4-B.	Chrysler Corporation to Aluminum Manufactures, Inc. (omitted in printing)	1322	
4-C	Aluminum Manufactures, Inc. to Aluminum Co. of America (omitted in printing)	1322	
4-D.	Aluminum Co. of America to The Cleveland Trust Company (omitted in printing)	1322	

Schmiedeknecht Patent No. 1,256,265

5-A.	Victor E. Schmiedeknecht to Frank J. Kent (omitted in printing)	1323	
5-B.	Warranty and guaranty by Victor E. Schmiedeknecht (omitted in printing)	1323	
5-C.	Frank J. Kent to Bohn Aluminum and Brass Corp. (omitted in printing)	1323	
5-D.	Bohn Aluminum & Brass Corp. to The Cleveland Trust Co. (omitted in printing)	1323	

Record from D. C. U. S., Northern District of Ohio—Continued

Plaintiffs' Exhibits—Continued

Nos.		Original	Print
7.	Instruction sheet to purchasers of Exhibit No. 1.	1325	
11.	Circular letter of Sterling Products Corporation (formal offer not included in narrative).....	1327	565
13.	Tabulation as to sales produced by Whitney.....	1328	565
15.	Drawing of cross-section of cylinder and piston wall (omitted in printing).....	1333	
16.	Drawing of cross-section of cylinder and piston wall (magnified) (omitted in printing).....	1335	
21.	Blueprint D-2376X of Defendants' 3-N Exhibit..	1337	570
22.	Blueprint D-2460X of Defendants' 3-M Exhibit..	1339	570
25.	Consent decree, Simmons case.....	1341	571
26	Conveyance, declaration of trust and agreement between L. P. Mooers and George B. Pitts and The Cleveland Trust Co., dated March 7, 1922..	1345	575
28.	Bill of sale, Amplex to Gulick (omitted in printing)	1358	
29.	Sketch by Randall of Gulick piston (omitted in printing)	1359	
31.	Cross-section drawing Gulick sleeve valve motor (omitted in printing)	1361	
32.	Detail of piston of preceding exhibit.....	1363	588
35-A.	Sketch by Winchester of Gulick piston (marked for identification, 638) (omitted in printing)..	1365	
35-B.	Sketch by Winchester of Gulick piston (marked for identification, 638) (omitted in printing)...	1367	
35-C.	Sketch by Winchester of Gulick piston (marked for identification, 638) (omitted in printing)..	1369	
35-D.	Sketch by Winchester of Gulick piston (marked for identification, 638) (omitted in printing)..	1371	
35-E.	Sketch by Winchester of Gulick piston (marked for identification, 638) (omitted in printing)...	1373	
36.	Gulick 1911 sketch (identified, 701) (omitted in printing)	1375	
37.	Gulick written description (identified, 702) (omitted in printing)	1377	
38a.	Supplemental contract between The Cleveland Trust Co. and Aluminum Co. of America, dated April 26, 1924	1365	589
38b.	License agreement between The Cleveland Trust Co. and Aluminum Co. of America.....	1381	591
	Exhibit A to license agreement (agreement between The Cleveland Trust Co. and Nordyke & Marmon Co., dated April 23, 1920).....	1393	602
38c.	License agreement between Walker M. Levett Co., W. M. Levett Corp., Walker M. Levett and The Cleveland Trust Co., dated April 11, 1924..	1397	605
38d.	License agreement between The National Piston Co., Gustave E. Franquist, James E. Diamond and The Cleveland Trust Co., dated April 11, 1924	1403	608

Record from D. C. U. S., Northern District of Ohio—Continued

Plaintiffs' Exhibits—Continued

Nos.		Original	Print
38e.	License agreement between Kant-Skore Piston Co. and The Cleveland Trust Co. dated April 11, 1924	1408	612
39a.	Letter from Aluminum Co. of America to The Cleveland Trust Co., dated September 19, 1927.	1412	616
39b.	Letter from Aluminum Co. of America to The Cleveland Trust Co., dated October 12, 1927...	1413	617
39c.	License agreement between The Cleveland Trust Co. and Bohn Aluminum & Brass Corp., dated September 15, 1927, with Lists A and B attached	1414	617
	List A	1426	628
	List B	1427	629
39d.	Letter from Aluminum Co. of America to The Cleveland Trust Co., dated September 19, 1927.	1428	630
39e.	Letter from Aluminum Co. of America to The Cleveland Trust Co., dated April 26, 1928.....	1429	631
39f.	License agreement between The Cleveland Trust Co. and Bohn Aluminum & Brass Corp., dated April 25, 1928.....	1430	632
39g.	Letter from Aluminum Co. of America to The Cleveland Trust Co., dated December 24, 1929..	1434	634
40.	Agreement between Bohn Aluminum & Brass Corporation and The Cleveland Trust Co., dated October 12, 1927 under Schmiedeknecht Patent No. 1,256,265	1435	635
42a.	Franklin Weekly Engineering Report for the Week Ending October 5, 1918.....	1438	638
42b.	Franklin Weekly Engineering Report for the Week Ending July 20, 1918.....	1439	639
42c.	Franklin Weekly Engineering Report for the Week Ending May 3, 1919.....	1440	640
44.	Letter to E. C. Long from Franklin Mfg. Co., dated May 9, 1918.....	1445	641
45.	Letter to E. C. Long from Franklin Automobile Co., dated April 17, 1918.....	1446	641
44.	Gulick sketch made in court of first sketch of 1911 (identified, J1) (omitted in printing)....	1447	
45.	Blueprint of Standard Excelsior Motor (identified, 704) (omitted in printing).....	1449	
46.	Blueprint P-2912	1451	642
50.	Blueprint of Excelsior motorcycle piston (identified, 709) (omitted in printing).....	1453	
51.	Gulick sketch made in court of piston made by casting of Rockhoff (omitted in printing).....	1455	
52.	Letter, Packard Motor Car Co. to E. J. Gulick, dated March 27, 1916 (omitted in printing)....	1457	

Record from D. C. U. S., Northern District of Ohio—Continued

Plaintiffs' Exhibits—Continued

Nos.		Original	Print
53.	Letter, E. J. Gulick to Packard Motor Car Co., dated April 1, 1916 (omitted in printing)	1459	
54.	Letter, E. J. Gulick to Packard Motor Car Co., dated December 4, 1916 (omitted in printing)	1460	
55.	Letter, Packard Motor Car Co. to E. J. Gulick, dated February 28, 1917 (omitted in printing)	1461	
56.	Letter, E. J. Gulick to Packard Motor Car Co., dated May 18, 1917 (omitted in printing)	1462	
57.	Letter, E. J. Gulick to Packard Motor Car Co., dated March 26, 1917 (omitted in printing)	1463	
60.	Picture of Renault Type Car driven by Gulick in 1911 (omitted in printing)	1465	
62.	Gulick Exhibit No. 11 in Interfences 49,569, 49,570 and 49,571 (omitted in printing)	1467	
63.	Letter, Ray Stewart Gehr to E. J. Gulick, dated August 22, 1923 (identified, 811) (omitted in printing)	1469	
64.	Letter, E. J. Gulick to Ray Stewart Gehr, dated August 23, 1923 (identified, 811) (omitted in printing)	1471	
65.	Gulick deposition on Interferences 49,569, 49,570 and 49,571, pages 40 to 103, inclusive (omitted in printing)	1472	
	Index of exhibits showing both interference and transcript numbers of exhibits (omitted in printing)	1472	
66.	Patent Office list of applications of Elmer C. Long filed in Patent Office	1452	642
67-B.	Opinion of examiner in Interference No. 49,569	1533	642
67-C.	Opinion of Board in Interference No. 49,569 (omitted in printing)	1538	
68-A.	Opinion of examiner in Interference No. 49,575 (omitted in printing)	1541	
68-B.	Opinion of Board in No. 49,575 (omitted in printing)	1544	
68-C.	Opinion of Court of Appeals of District of Columbia in Interference No. 49,575 (omitted in printing)	1546	
69-A(1).	Opinion of law examiner in Interference No. 49,570 (omitted in printing)	1548	
69-A(2).	Opinion of examiner of interferences in Interference No. 49,570 (omitted in printing)	1551	
69-B(1).	Petition for rehearing in Interference No. 49,570 (omitted in printing)	1554	
69-B(2).	Opinion of Board in Interference No. 49,570 (omitted in printing)	1556	
69-B(3).	Opinion of the Board of Appeals in Interference No. 49,570 (omitted in printing)	1558	

Record from D. C. U. S., Northern District of Ohio—Continued

Plaintiffs' Exhibits—Continued

Nos.		Original	Print
69-C.	Opinion of the Court of Customs and Patent Appeals in Interference No. 49,570 (omitted in printing)	1562	
70-A.	Opinion of the examiner in Interference No. 49,571 (omitted in printing)	1565	
70-B.	Opinion of the Board of Interference No. 49,571 (omitted in printing)	1570	
74.	Drawing showing dimensions of Defendants' Exhibit Monckmeier 3-V (omitted in printing)	1573	
75.	Drawing showing dimensions of Defendants Exhibit Monckmeier 3-W (omitted in printing)	1575	
84.	Ruling of examiner in abandoned application of Ray E. Day for patent (omitted in printing)	1577	
85.	Certified copy of the drawings of the abandoned application of Ray E. Day, filed January 10, 1923, Serial No. 611,698 (omitted in printing)	1579	

Defendants' Exhibits

A.	Drawing produced by Venner of Long 1916 piston.	1585	646
C.	Two paragraphs from Service Department Bulletin, Sheet No. 262, April 8, 1920, of Franklin Automobile Co., entitled "Long Type Pistons"	1587	647
D.	Seven paragraphs from Service Department Bulletin, Sheet No. 289, November 11, 1920, of Franklin Automobile Co., entitled "New Design for Series Nine"	1588	647
H.	Article from Franklin Service Bulletin No. 348, April 18, 1932, of Franklin Automobile Co., entitled "The Oval Type Piston"	1589	648
I.	Article from page 1, Franklin Service Bulletin No. 369, February 20, 1923, of Franklin Automobile Company, entitled "Piston and Wrist Pin Knocks," and drawing on page 2, entitled "Drill Jig for Extra Oil Holes in Piston"	1591	650
J.	Forfeited and abandoned application of William M. Venner for improvement in pistons, filed April 12, 1920, Serial No. 373,340	1595	651
K.	Venner drawing, February 16, 1920	1603	656
L.	Letter from George J. Oltsch to Wm. M. Venner, dated September 22, 1920	1605	657
M.	Photostat of page 149, showing cut only in "The Gasoline Automobile," by Heldt, Vol. I (omitted in printing)	1607	
N.	Article from pages 8 and 9 of Manual for Trouble Shooters of Franklin Automobile Company, entitled "Piston Slap"	1609	657

Record from D. C. U. S., Northern District of Ohio—Continued

Defendants' Exhibits—Continued

No.		Original	Print
O.	Drawing produced by Chadwick, Long 6-slot piston	1611	659
S.	Tracing of "Oldsmobile Six" piston produced by Chadwick	1613	660
T-1.	Tracing produced by Chadwick of Long pistons for Ford, Model T Car	1615	661
T-2.	Tracing produced by Chadwick of Long pistons for Essex Car	1617	662
T-3.	Tracing produced by Chadwick of Long pistons for Duesenberg Car	1619	663
U.	Weems' advertisement on page 124 of "Motor Age" for July 7, 1921 (omitted in printing)	1621	
W.	Photostat of trunk piston added to by Chadwick to show T-Slot, Long piston	1623	664
X.	Digest of Defendant's Exhibit X, agreement dated September 20, 1919 between E. C. Long and M. K. Weems	1625	665
Y.	Photostat of drawing by Stellman, Long 1916 Piston (identified, 452)	1627	666
Z.	L. M. Stellman's Report, dated March 18, 1919, entitled "Test on Long Pistons"	1629	667
AA.	Digest of Defendants' Exhibit AA, license agreement dated March 20, 1919, between E. C. Long and Franklin Mfg. Co.	1632	669
CC'(1).	Blue print D-793X of The Aluminum Castings Co. (Drawing of proposed design of piston for H. H. Franklin Mfg. Co.)	1633	671
CC'(2).	Blueprint D-944X of The Aluminum Castings Co. (drawing of proposed design of piston for H. H. Franklin Mfg. Co.)	1634	672
CC'(3).	Blueprint D-960X of The Aluminum Castings Co. (drawing of proposed design of piston for H. H. Franklin Mfg. Co.)	1635	673
DD.	Sketch of Long pistons seen by Royalty in 1913	1637	674
EE.	Sketch of Long piston by Royalty in February, 1918	1638	675
FF.	Sketch of other views of piston shown in Exhibit EE	1639	676
GG.	Photostat of pattern record card marked D-8764	1640	677
HH.	Photostat of pattern record card marked A-640	1641	678
II.	Photostat of pattern record card marked B-122	1642	679
JJ.	Photostat of pattern record card marked H-4	1643	680
KK.	Photostat of pattern record card marked C-123	1644	681
LL.	Card bearing notation, "Use Patt. A-640 as per instructions on core box"	1645	
MM.	Card bearing designation, "Patt. No. A-641"	1646	683

Record from D. C. U. S., Northern District of Ohio--Continued

Defendants' Exhibits—Continued

Nos.		Original	Print
3-S.	Page 274 of "The Automobile Engineer" of October, 1918, Vol. VIII, No. 119	1647	684
3-X.	Letter dated June 20, 1916, with Monckmeier photo (omitted in printing)	1648	
4-A.	Stellman sketch of Maynard patent structure	1649	685
4-B.	Photostat of roots superimposed on Ebbs (omitted in printing)	1651	
4-C.	Decision of law examiner, dated April 4, 1924, in Interference No. 49,569 (omitted in printing)	1653	
4-D.	Decision of law examiner, dated April 4, 1924, in Interference No. 49,574 (omitted in printing)	1659	
4-E.	Decision of law examiner, dated April 4, 1924, in Interference No. 49,580 (omitted in printing)	1661	
4-F.	Decision of law examiner, dated April 7, 1925, in Interference No. 49,575 (omitted in printing)	1663	
4-G.	Pages 362, 363 and 364 of "Automotive Industries" for January 29, 1920	1667	686
4-H.	Prior art patents	....	689

U. S. Patents

	No. 700,309, May 20, 1902, H. E. Ebbs (omitted in printing)	1671	
	No. 908,569, January 5, 1909, F. D. Howe (omitted in printing)	1675	
	No. 1,031,212, July 2, 1912, E. Van Bever	1679	
	No. 1,092, 870, April 14, 1914, E. O. Spillman and L. P. Mooers	1683	693
	No. 1,153,902, September 21, 1915, G. E. Franquist	1687	697
	No. 1,174,092, March 7, 1916, W. L. Schoengarth (omitted in printing)	1693	
	No. 1,195,936, August 22, 1916, C. White (omitted in printing)	1699	
	No. 1,229,540, June 12, 1917, E O. Spillman (omitted in printing)	1703	
	No. 1,279,184, September 17, 1918, J. G. Vincent (omitted in printing)	1707	
	No. 1,283,021, October 29, 1918, C. C. Anderson (omitted in printing)	1713	
	No. 1,294,833, February 18, 1919, H. R. Ricardo	1717	702
	No. 1,325,176, December 16, 1919, A. Spillman (omitted in printing)	1723	
	No. 1,395,441, November 1, 1921, E. C. Long	1727	708
	No. 1,489,499, April 8, 1924, E. C. Long	1731	712
	No. 1,872,772, August 23, 1932, E. C. Long	1735	716

Record from D. C. U. S., Northern District of Ohio—Continued

British Patents

	Original	Print
No. 19,559 of 1890, James Roots (omitted in printing)	1739	
No. 17,256, of 1907, John Vernon Pugh (omitted in printing)	1743	
No. 6,826 of 1912, William Frederick Rainforth (omitted in printing)	1751	
No. 12,772 of 1914, Samuel Octavius Ferry (omitted in printing)	1755	
Specification 140,988, Ernest Walter Hives (omitted in printing)	1759	

French Patents

No. 468,595 of 1914 Chenard and Walcker (omitted in printing)	1763	
(Translation of foregoing) (omitted in printing)	1767	
No. 434,147 of 1911, M. Chas.-Emile Serex (omitted in printing)	1769	
(Translation of foregoing) (omitted in printing)	1773	
No. 16,362 of 1912, M. Chas.-Emile Serex (omitted in printing)	1777	
(Translation of foregoing) (omitted in printing)	1781	

German Patent

No. 176,988 of 1906, Otto Lietzenmayer (omitted in printing)	1785	

Additional U. S. Patents

Nos.			
	No. 1,557,625, October [illegible], 1925, L. M. Stellman	1789	720
	No. 1,842,022, January 19, 1932, S. D. Hartog	1797	726
	No. 1,499,073, June 24, 1924, L. H. Pomeroy	1803	731
4-I.	Royalty Report of June 30, 1927 of The Cleveland Trust Co. (omitted in printing)	1809	
4-J.	Pages 602, 603 and 604 from "The Automobile" of March 12, 1914 (omitted in printing)	1827	
4-K.	Pages 558, 559 and 560 from "The Automobile" of March 5, 1914 (omitted in printing)	1831	
4-L.	File wrapper and contents of Gulick Patent (No. 1,815,733) in Suit	1835	737
4-L_1.	File wrapper and contents of Mooers Patent (No. 1,402,309) in Suit (omitted in printing)	1977	
4-L_2.	File wrapper and contents of Jardine Patent (No. 1,763,523) in Suit	2027	747

Record from D. C. U. S., Northern District of Ohio—Continued

Defendants' Exhibits—Continued

Nos.		Original	Print
4-L_3.	File wrapper and contents of Schmiedknecht Patent (No. 1,256,265) in Suit (omitted in printing)	2129	
4-L_4.	File wrapper and cnotents of Maynard Patent (No. 1,655,968) in Suit (omitted in printing)	2147	
4-M.	Page 555 of "The Horseless Age" for April 8, 1914 (omitted in printing)	2220	
4-N.	Page 1081 of "The Horseless Age" for December 24, 1913 (omitted in printing)	2231	
4-O.	Pages 85 and 86 of "The Automobile Engineer" for March 12, 1914 (omitted in printing)	2233	
4-P.	Postal showing Staver Car (omitted in printing)	2237	
4-Q.	D'Vorsky sketch of Monckmeier piston (omitted in printing)	2239	
4-R.	Stipulated digest of Defendants' Exhibit 4-R, The Anamosa Journal, Anamosa, Iowa, Thursday, June 10, 1915 (omitted in printing)	2241	
4-S.	Same as Plaintiff's Exhibit 38b	1381	591
4-T.	Same as Plaintiff's Exhibit 38	1378	589
4-U.	Same as Plaintiff's Exhibit 39	1412	616
4-V.	Same as Plaintiff's Exhibit 40	1435	635
4-X.	List of patents owned by The Cleveland Trust Co. under trust	2241	844
4-Y.	Bill of complaint and answer in Case No. 27-32 in the United States District Court for the Southern District of New York, The Cleveland Trust Co. vs. The National Piston Co., Inc.	2243	846
	Answer (omitted in printing)	2254	
	Final decree	2259	851
4-Z.	Bill of complaint in Case No. 535 in the United States District Court for the Eastern District of Michigan, The Cleveland Trust Co. vs. E. C. Long Piston Co. and E. C. Long	2261	853
5-C.	Page 250 of "The Motor World" for December 28, 1931	2271	864
5-D.	Page 133 of "Automobile Trade Journal", April, 1916 (omitted in printing)	2273	
5-E.	Page 504 of "Automobile Engineer" for December, 1920 (omitted in printing)	2275	
5-F_1 to 5-F_{12}.	Stipulated digests of various publications:		
	5-F_1 to 5-F_6 (omitted in printing)	2277	
	5-F_7 to 5-F_{12} (omitted in printing)	2278	
5-G.	Stipulated digest of certificate from Secretary of State for State of Illinois, Staver Motor Car Co. (omitted in printing)	2279	

Record from D. C. U. S., Northern District of Ohio—Continued

Defendants' Exhibits—Continued

Nos.		Original	Print
5-H_1	Stipulated digest of the decision of the law examiner in Interference No. 45,351	2279	865
5-H_2.	Stipulated digest of the decision of the examiner in Interference No. 45,351	2279	865
5-H_3.	Stipulated digest of the decision of the Board of Appeals in Interference No. 45,351	2279	865
5-I.	Books of account pages V-1, V-2, V-4	2280	865
	Bill of complaint in Case No. 3510 in the United States District Court for the Northern District of Ohio, The Cleveland Trust Co. and Chrysler Corp. vs. The Simmons Mfg. Co. and Sterling Products Corp.	2285	870
5-J.	Letter dated October 17, 1932 from Anna Landon Duke to J. H. Bruninga (omitted in printing)	2303	
5-K_1.	Letter dated May 4, 1915 from Walter L. Schoengarth to Louis Bagger & Co. (omitted in printing)	2304	
5-K_2(1).	Tracing of Schoengarth piston (omitted in printing)	2305	
5-K_2(2).	Tracing of Schoengarth piston (omitted in printing)	2307	
5-K_3.	Three pages description by Schoengarth of "The Adjustable Gas Engine Piston" (omitted in printing)	2309	
5-K_4.	Letter dated May 13, 1915 from Louis Bagger & Co. to W. L. Schoengarth (omitted in printing)	2310	
5-K_5.	Letter dated May 22, 1915 from W. L. Schoengarth to Louis Bagger & Co. (omitted in printing)	2311	
5-K_6.	Letter dated May 27, 1915 from Louis Bagger & Co. to W. L. Schoengarth (omitted in printing)	2311	
5-K_7.	Letter dated July 29, 1914 from W. L. Schoengarth to Louis Bagger & Co. (omitted in printing)	2312	
5-K_8.	Letter dated August 5, 1915 from Louis Bagger & Co. to W. L. Schoengarth (omitted in printing)	2313	
5-K_9.	Certified copy of application papers of the Schoengarth Patent No. 1,174,092 (omitted in printing)	2314	
5-K_{11}.	Letter dated April 2, 1917 from Louis Bagger & Co. to Walter Schoengarth (omitted in printing)	2325	
5-K_{12}.	Envelope sent to Schoengarth at Cleveland (omitted in printing)	2327	
5-M.	List of patents to Packard Motor Company (discussed, 889) (omitted in printing)	2329	

Record from D. C. U. S., Northern District of Ohio—Continued

CASE No. 4046

	Original	Print
Caption .....(omitted in printing)..	2331	
Notes re trial papers, orders, testimony, exhibits and appeal papers (omitted in printing) .....2332 to	2342	
Assignments of error	2365	888
Supplementary praecipe .....(omitted in printing)..	2368	

CASE No. 4047

Caption .....(omitted in printing)..	2343	
Notes re trial papers, orders, testimony, exhibits and appeal papers (omitted in printing).....2344 to	2354	
Assignments of error.....	2371	893
Supplementary praecipe.....(omitted in printing)..	2376	

Orders extending time to October 10, 1935 for filing transcript of record in United States Circuit Court of Appeals (omitted in printing)	2355	
Certificate of clerk	2357	887

Proceedings in U. S. C. C. A., Sixth Circuit.....	2379	899
Decree, Case No. 7223, October 8, 1937	2379	889
Decree, Case No. 7224, October 8, 1937	2379	889
Decree, Case No. 7225, October 8, 1937	2380	900
Opinion, Simons, J., October 8, 1937.....	2381	901
Decree, Case No. 7223, October 6, 1939.....	2395	915
Decree, Case No. 7224, October 6, 1939.....	2395	915
Decree, Case No. 7225, October 6, 1939.....	2395	915
Opinion, Simons, J., October 6, 1939.....	2396	916
Petition for rehearing	2407	927
Order on petition for rehearing	2410	930
Order amending mandate	2410	930
Clerk's certificate	2411	931
Orders extending time within which to file petition for writ of certiorari	2412	932
Orders allowing certiorari	2414	935

BLANK PAGE

BLANK PAGE

[fols. 1283-1290] **PLAINTIFFS' EXHIBIT No. 2**

Gulick Patent in Suit

U. S. Patent No. 1,815,733, July 21, 1931,

To E. J. Gulick

Piston

(Filed January 27, 1934)

529

July 21, 1931. E. J. GULICK 1,815,733

PISTON

Filed Nov. 30, 1917

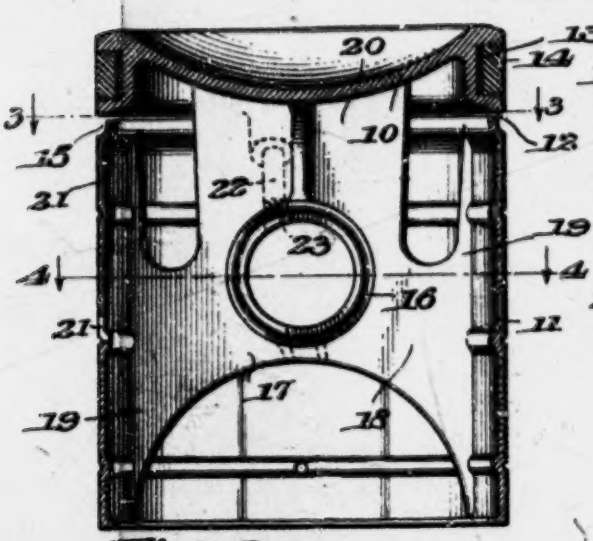

Fig. 1.

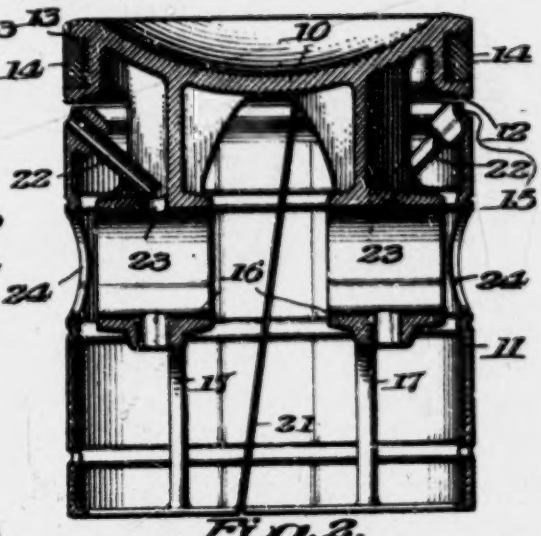

Fig. 2.

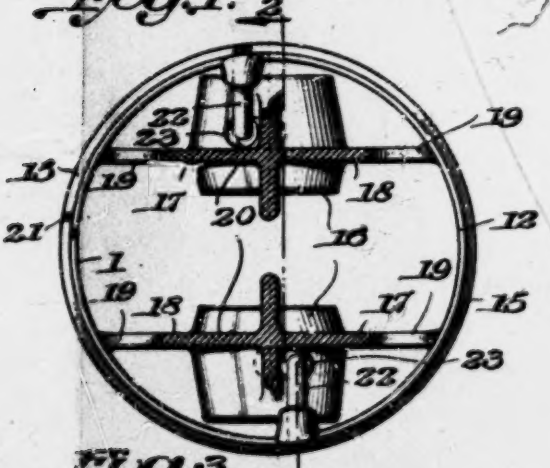

Fig. 3.

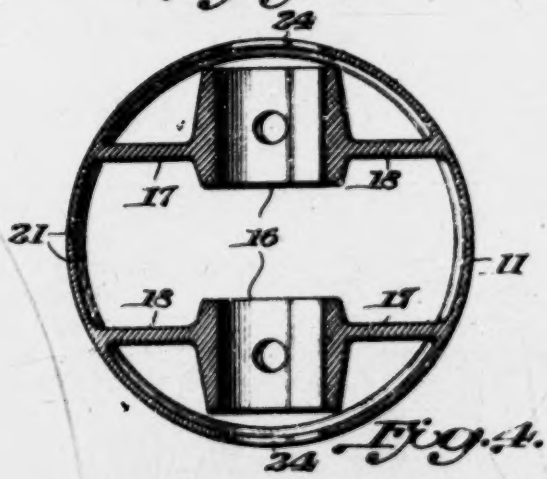

Fig. 4.

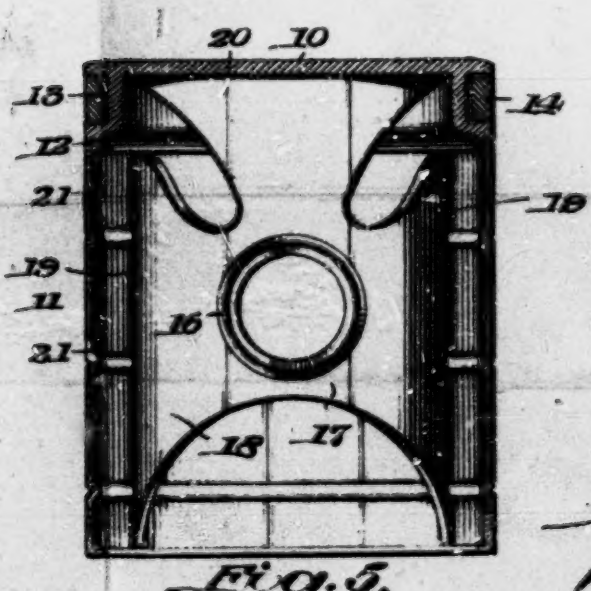

Fig. 5.

Fig. 6.

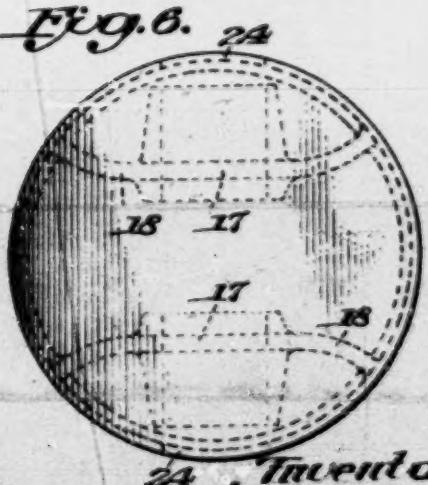

Inventor:
Edward J. Gulick,
By Wilson T. Betts, Atty

Patented July 21, 1931 1,815,733

UNITED STATES PATENT OFFICE

EDWARD J. GULICK, OF ELKHART, INDIANA, ASSIGNOR, BY MESNE ASSIGNMENTS, TO THE CLEVELAND TRUST COMPANY, A CORPORATION OF OHIO

PISTON

Application filed November 30, 1917. Serial No. 204,981.

This invention relates to pistons.

One of the objects of the present invention is to provide a piston which will not expand against the cylinder wall to such an extent as to seize or stick.

Another object of the invention is to provide a piston with a skirt or guide portion slightly separated from the head of the piston and split longitudinally so that it will not expand in circumference with a force great enough to cause the piston to stick in the cylinder.

Another object of the invention is to provide a piston with improved lubricating means for the piston pin bosses.

Another object of the invention is to rigidly support the piston pin bosses of a piston from the piston walls against mechanical load thrust from the connecting rod without interfering with the yielding characteristics of the skirt in response to cylinder wall pressure.

Other objects of the invention will appear from the following description taken in connection with the drawings which form a part of this specification, and in which:

Fig. 1 is a longitudinal sectional view through a piston embodying the invention;

Fig. 2 is similar to Fig. 1 taken at right angles thereto, being on the line 2—2 of Fig. 3;

Fig. 3 is a transverse section substantially on the line 3—3 of Fig. 1;

Fig. 4 is a transverse section on the line 4—4 of Fig. 1;

Fig. 5 is a view similar to Fig. 1, showing a slightly different form of piston embodying the invention; and

Fig. 6 is a top view of the piston shown in Fig. 5.

Referring to the drawings, 10 represents the head portion of a piston and 11 is the skirt or guide portion which is shown as separated at its periphery from the head leaving an annular slit or opening 12 therebetween. The head portion of the piston is provided with an annular groove 13 for a piston ring 14, and the upper end of the skirt portion 11 is formed with a recess shown in the form of an annular groove 15 for the purpose of collecting the oil that may be scraped from the cylinder during the reciprocation of the piston.

The piston is also provided with a pair of separated piston pin bosses 16 which are formed with integral supporting flanges 17 extending around the bosses and arranged intermediate their ends. These flanges extend laterally of their respective bosses in the form of webs 18 which integrally connect with the wall of the guide portion 11 as shown in the drawings. Since there are two of these webs or walls 18 for each of the bosses 16 there are therefore four connections of the webs 18 to the skirt or guide portion 11. These connections are in the four longitudinal lines as shown at 19.

The flanges 17 also extend upwardly from the bosses in the form of webs or walls 20 leading to the head 10 and thereby connecting the bosses with the head. Thus, the bosses are connected to both the head and the skirt so that the latter is held in its proper position directly beneath the head as shown in Figs. 1 and 2.

In order that the skirt may not expand an undue amount when the piston is heated, as under operating conditions, the cylinder-engaging part of the guide at one side of the pin bosses which takes the angular thrust of the connecting rod during one stroke of the piston is split longitudinally as at 21. This split is slightly diagonal to prevent wearing a groove in the cylinder and it effects a complete severing of the guide wall so that the separated edges of the split are unrestrained for movement toward and from each other.

The piston is further provided with conduits 22 shown in the form of pipes extending from the recess or groove 15 at the upper end of the skirt to openings 23 in the bosses. There is shown one conduit for each boss and it will be understood that the oil collected in the groove 15 by the piston in its reciprocation is led down through the conduits 22 to the interior of the piston pin boss to thereby lubricate the bearing.

The skirt 11 is formed with openings 24 in its side registering with the openings through the bosses 16 so that the piston pin

may be inserted. As these openings are well above the bottom of the guide portion of the piston the lower end of the piston skirt is left unbroken, except for the split 21, and the arcuate parts of the skirt beneath said openings may be looked upon as joining the lower ends of the diametrically opposite cylinder-engaging parts of the guide that sustain the angular thrust of the connecting rod.

It will be seen that in addition to providing a piston with a split guide portion, the above described construction also provides a longitudinally rigid connection between the piston pin bosses and the guide portion of the piston, which construction may be used either with or without the split guide portion and separated head. The arrangement of the supporting flanges 17 between the ends of the piston pin bosses and the connections of those flanges with both the piston guide portion and the head provide a particularly strong construction, and at the same time, when the longitudinal split is used, as shown, the web structure has sufficient lateral flexibility to permit the split to close more or less under the action of the expansion forces incident to the heating of the piston.

In Figs. 5 and 6 the webs or walls 18 are slightly curved between the flanges 17 and the guide portion to thereby distribute the connection of the bosses to the guide portion more evenly around the piston. Otherwise the showing is substantially the same as in the other figures. While my piston is, of course, adapted for use in either vertical, inclined, or horizontal engines, for convenience I refer in some instances to its head end and its open end as the upper and lower ends or parts, respectively.

It will be understood further that my invention is not limited to the details of construction shown and other forms may be used without departing from the spirit or scope of the invention.

Having thus described my invention, what I claim and desire to secure by Letters Patent is:—

1. A piston comprising a head, a skirt separated at its periphery from the head, and pin bosses connected to the head and to the upper and lower parts of the skirt, said skirt being split longitudinally at one side between its connection to said bosses.

2. A piston comprising a head, a skirt separated at its periphery from the head, and pin bosses integrally connected to the head and to the upper and lower part of the skirt, the outer ends of the pin bosses being spaced from the opposing parts of the skirt wall and said skirt having openings opposite the open ends of the bosses, said skirt being split longitudinally on one side between its connections to said bosses.

3. A piston comprising a head, a skirt separated at its periphery from the head, and pin bosses integrally connected to the head and to the skirt in four longitudinal lines, the ends of said bosses being spaced from the opposing parts of the wall of the skirt, said skirt having openings therethrough opposite the open ends of the bosses.

4. A piston comprising a head, a skirt separated at its periphery from the head, and pin bosses connected to the head, and also connected to the skirt both above and below the bosses, said skirt being split longitudinally between its connections to said bosses.

5. An integrally cast piston comprising a head, a skirt separated at its periphery from the head, and pin bosses integrally connected to the head and to the skirt at both sides and in the zone of said bosses, the bosses having their ends spaced from the opposing parts of the skirt wall, said skirt being split longitudinally between its connections to said bosses.

6. An integrally cast piston comprising a head, a skirt, separated piston pin bosses within the skirt, and an integral flange on each of said bosses intermediate its ends, said flange extending from both sides of the boss to the piston skirt and integrally united therewith in the zone of the boss, said flanges being yieldable in the direction of the piston pin boss axis and relatively rigid in the direction of their length.

7. A piston comprising a head, a skirt, separated piston pin bosses integral with the head and disposed within the skirt, and integral transversely flexible webs extending from the intermediate part of each of said bosses to the skirt wall in the zone of the boss for supporting the bosses from the adjacent part of the skirt.

8. A piston comprising a head, a skirt having its periphery separated from the head, pin bosses in the piston spaced from the wall of the skirt and conduits leading from the top of said skirt to the interior of said bosses.

9. A piston comprising a head, a skirt having its periphery separated from the head, pin bosses in the piston, the ends of said bosses being spaced from the walls of the skirt; means integrally connecting the bosses with the head and skirt, and pipes leading from the upper part of the skirt to the bosses.

10. A piston comprising a head, a skirt, separated piston pin bosses within the skirt, and an intermediate flange on each of said bosses intermediate its ends, said flange extending laterally from both sides of the boss to the piston skirt in a curve and integrally united with the skirt in the zone of the boss.

11. A piston comprising a head portion, a skirt portion, two separated pin bosses, connecting flanges in the zone of the bosses and extending from the bosses to the skirt on both sides of the bosses, connecting means from each of the bosses to the head portion, the

skirt portion being entirely separated from the head portion except through the boss connections, and the skirt portion being split longitudinally of the piston to permit free expansion and contraction.

12. A piston comprising a head portion, a skirt portion, two separated pin bosses, connecting flanges in the zone of the bosses and extending from the bosses to the skirt on both sides of the bosses, connecting means from each of the bosses to the head portion, the skirt portion being entirely separated from the head portion except through the boss connections, and the skirt portion being split longitudinally of the piston to permit free expansion and contraction and the skirt portion being cut away adjacent the outer ends of the piston bosses.

13. A piston having a head portion with a ring groove therein, a skirt portion having its cylinder-engaging part separated from the head portion, separated pin bosses having integral flanges connecting them with the skirt on both sides of the bosses and with the head portion respectively, said skirt being split from top to bottom on one side only of the pin bosses to permit free expansion and contraction of the skirt portion.

14. A piston for internal combustion engines comprising in combination a head portion having an end wall and a ring-packed side wall, a guide portion having an annular bearing surface at the open end thereof and diametrically opposite cylinder-engaging parts thereof designed to take the angular thrust of a connecting rod and each separated at its upper end from the said side wall of the head portion by an unobstructed air gap, a pair of separated pin bosses disposed on an axis between said cylinder-engaging parts, a pair of longitudinally disposed walls connected to said bosses and each joined at relatively widely separated points to the said cylinder-engaging parts above and below the plane of the boss axis, said walls being disposed within the maximum diameter of the piston, and integral, rigid connections extending from the bosses to the head portion.

15. A piston for internal combustion engines comprising in combination a head portion having an end wall and a side wall, a guide portion having on one side a cylinder-engaging part disposed to take the angular thrust of a connecting rod during one stroke of the piston, said cylinder-engaging part being separated at its upper end from said side wall by an air gap and being split longitudinally to accommodate expansion incident to the heating of the piston, a pair of separated pin bosses, and walls integrally uniting said bosses, the guide portion and the head portion.

16. A piston for internal combustion engines comprising in combination a head portion having an end wall and a side wall, a guide portion having diametrically opposite cylinder-engaging parts thereof designed to take the angular thrust of a connecting rod and each separated at its upper end from the said side wall by an air gap and one of said cylinder-engaging parts being split longitudinally from its upper edge to its lower edge, a pair of separated pin bosses disposed on an axis between said cylinder-engaging parts, and walls integrally uniting said bosses, the guide portion and the head portion, said split in the cylinder-engaging face of said guide portion being disposed between the connections thereto of said walls.

17. A piston for internal combustion engines comprising in combination a head portion having an end wall and a side wall, a guide portion having diametrically opposite cylinder-engaging parts thereof designed to take the angular thrust of a connecting rod and arcuate cylinder-engaging parts joining said diemetrically opposite parts at the lower end of the guide, the said diametrically opposite parts each being separated at its upper end from the side wall of the head section by an air gap, a pair of separated pin bosses disposed on an axis between said cylinder-engaging parts, a pair of transversely flexible walls integrally connected to said bosses and integrally joined to the cylinder-engaging parts at points above and below the plane of the boss axis, said walls being disposed within the maximum diameter of the piston, and connections extending from the bosses to the head portion and integral therewith.

18. A piston for an internal combustion engine cylinder comprising in combination, a head portion having an end wall and a side wall, a guide portion having diametrically opposite cylinder-engaging parts thereof designed to receive the side thrust of a connecting rod and arcuate cylinder-engaging parts joining said diametrically opposite parts at the lower end of the guide portion to provide an annular bearing face adjacent the open end of the piston, each of said diametrically opposite cylinder-engaging parts being separated at its upper end from the side wall of the head portion, a pair of separated pin bosses disposed on an axis between said cylinder-engaging parts, a pair of spaced walls, each of which connects one of said bosses to said cylinder-engaging parts at points above and below the plane of the boss axis, one of said diametrically opposite cylinder-engaging parts being split longitudinally from its upper edge to its lower edge between its connections to said walls, and connections extending from the bosses to the head portion, whereby said piston skirt is rendered yieldable during operation in response to cylinder wall pressure.

19. A piston for internal combustion engines comprising in combination a head por-

tion having an end wall and a side wall, a guide portion having diametrically opposite cylinder-engaging parts thereof designed to take the angular thrust of a connecting rod and each separated at its upper end from the said side wall by an air gap, a pair of separated pin bosses disposed on an axis between said cylinder-engaging parts, a pair of walls connected to said bosses and joined to the said cylinder-engaging parts at points above and below the plane of the boss axis, and rigid, integral connections between the bosses and the head portion comprising upward extensions of said walls with strengthening ribs disposed substantially at right angles thereto.

20. A piston for internal combustion engines comprising in combination a head portion having an end wall and a side wall, a guide portion having diametrically opposite cylinder-engaging parts thereof designed to take the angular thrust of a connecting rod and each separated at its upper end from the said side wall by an air gap, spaced supporting connections between said head and guide portions, one of said cylinder-engaging parts being split longitudinally from its upper edge to its lower edge between said supporting connections, a pair of separated pin bosses disposed on an axis between said cylinder-engaging parts, a pair of walls disposed within the maximum diameter of the piston and integrally connected to said bosses and to said cylinder-engaging parts and to said head portion.

21. A piston for internal combustion engines comprising in combination a head portion having an end wall and a side wall, a guide portion having diametrically opposite cylinder-engaging parts thereof designed to take the angular thrust of a connecting rod and each separated at its upper end from the said wall by an air gap and one of said cylinder-engaging parts being split longitudinally from its upper edge to its lower edge, a pair of separated pin bosses disposed on an axis between said cylinder-engaging parts, and walls integrally uniting said bosses, the guide portion and the head portion, the guide structure and said walls being adapted to permit the split of the cylinder-engaging part to close more or less under the action of forces incident to the heating of the piston during operation.

22. A piston comprising in combination a head portion having an end wall and side wall, a guide portion having diametrically opposite cylinder-engaging parts thereof designed to take the angular thrust of a connecting rod and each separated at its upper end from the said side wall by an air gap, a pair of separated pin bosses disposed on an axis between said cylinder-engaging parts, a pair of walls connected to said bosses and to said cylinder-engaging parts, and connections extending from the bosses to the head section, one of the said cylinder-engaging parts being split longitudinally between the points of attachment thereto of the said walls.

23. In a piston, the combination of a head portion having an end wall and a side wall, a guide portion, a pair of separated piston pin bosses connected to the head portion, and webs disposed longitudinally of the piston integrally joining the inner parts of said bosses to the guide portion in the zone of said bosses.

24. A piston for internal combustion engines comprising a head portion, a guide portion, a pair of separated pin bosses connected to the head portion and arranged within the maximum diameter of the piston whereby the outer ends of the bosses will be out of contact with the cylinder wall, and a flange on each of said bosses near its inner end extending laterally from both sides of the boss to the guide portion in a curve and integrally united with the guide portion in the zone of the boss, said flange being disposed longitudinally of the piston.

25. An integrally formed piston for internal combustion engines comprising in combination a head portion having an end wall and a side wall, a pair of separated pin bosses, and a guide portion connected to said bosses and having on one side a cylinder-engaging part disposed to take the angular thrust of a connecting rod during one stroke of the piston, said cylinder-engaging part being separated at its upper end from said side wall of the head portion by an air gap and being split longitudinally between its connections to said bosses to accommodate expansion incident to the heating of the piston.

26. An integrally formed piston for internal combustion engines comprising in combination a head portion having an end wall and a side wall, a guide portion having diametrically opposite cylinder-engaging parts thereof designed to take the angular thrust of a connecting rod and each separated at its upper end from the said side wall by an air gap, spaced supporting connections between said head and guide portions, one of said cylinder-engaging parts being split longitudinally between its supporting connections from its upper edge to its lower edge, and a pair of separated pin bosses disposed on an axis between said cylinder-engaging parts.

27. A one-piece piston with a solid end portion and a skirt portion supported therefrom by spaced integral connections and having formed in its peripheral face a transverse slot adjacent the solid end of the piston and a single longitudinal slot in the skirt between the spaced integral connections and extending from the transverse slot to the open end of the piston, said slots forming adjacent disconnected main peripheral bearing por-

tions in the skirt which are capable of unrestrained outward and inward movement, the bearing face of said piston diametrically opposite said longitudinal slot being circumferentially continuous between the spaced integral connections of the skirt to the head on that side of the skirt.

28. A one piece piston provided with a solid end portion and a skirt portion having oppositely disposed thrust bearing faces, said skirt portion having a longitudinally extending slot formed through the thickness of its wall, said slot extending from the rear edge of the skirt portion through one of said thrust bearing faces and forming adjacent disconnected parts of a thrust bearing face in said skirt portion which are capable of being moved inwardly or outwardly without restraint.

29. A piston comprising a head and body, internal yielding ribs supporting the head and body, and means on said ribs adapted to form engaging connection with operable parts for said piston.

30. A piston open at one end and having a packing ring supporting portion and a cylinder engaging portion, said cylinder engaging portion having a slot which is cut through the thickness of its peripheral wall and extending from the open end of the piston to said ring supporting portion, a pair of wrist pin bearings depended from said ring supporting portion separating from said cylinder engaging portion, and tying means extending from each of said wrist pin bearings each being co-operably connected at their opposite ends to said cylinder engaging portion.

31. A piston having a head with top and side walls in combination with a guide structure connected thereto and comprising diametrically opposite cylinder-engaging parts formed with air spaces between their upper edges and the bottom edge of the side wall of the head, wrist pin bosses between the cylinder-engaging parts, and means joining said bosses and cylinder-engaging parts together, the said joining means being resiliently yieldable and arranged not to engage the cylinder.

32. A piston closed at one end and open at its opposite end, said piston having an annular cutting formed through the thickness of its peripheral wall thereby providing a separated sleeve-like skirt which is approximately cylinder bearing in its entirety, a pair of wrist pin bearings depended from said piston end and being free from engagement with said skirt, supporting means extending from each of said bearings to said skirt, said skirt being provided with a longitudinal slot cut through the thickness of its wall between its connections to said supporting means and extending from the open end thereof to said annular cutting.

33. A piston for use in an engine cylinder comprising a head, a skirt, parts of said skirt forming oppositely positioned main bearing portions designed to take the side thrust of a connecting rod, a pair of spaced wrist pin bosses, means integrally connecting the bosses to the head, and means integrally connecting each boss to both of said opposite main bearing portions, one main bearing portion being circumferentially continuous between its connections to the bosses and the other main bearing portion being separated from the head and slit longitudinally between its connections to the bosses to render said slit main bearing portion yieldable in response to pressure from the engine cylinder during operation.

34. A piston for use in an engine cylinder comprising a head, a skirt, parts of said skirt forming oppositely positioned main bearing portions to take the side thrust of a connecting rod, a pair of spaced wrist pin bosses, means integrally connecting the bosses to the head, and means integrally connecting each boss to both of said opposite main bearing portions, one main bearing portion being circumferentially continuous between its connections to the bosses and the other main bearing portion being separated from the head and slit longitudinally its entire length between its connections to the bosses to render said slit main bearing portion yieldable in response to pressure from the engine cylinder during operation.

35. A single-piece, integral piston, comprising a head, a pair of spaced wrist pin bosses having a common axis, a skirt, and means yieldingly connecting the skirt to the head, said skirt being integral and having main cylinder bearing faces disposed on opposite sides of the axis of said wrist pin bosses, said skirt being separated from the head at the upper end of each of said bearing faces, one only of said main cylinder bearing faces being slit longitudinally between its connections to the head, whereby said head may expand and contract during operation of said piston substantially independently of said skirt portion when expansion of the skirt portion is restrained.

36. A single-piece, integrally cast piston for use in an engine, comprising a head, wrist pin bosses having a common axis, a skirt, and means connecting said head and bosses and skirt together, said skirt being integral and having a main bearing portion disposed on each side of the said wrist pin boss axis and designed to take the side thrust produced by the angularity of the connecting rod of the engine, said piston having a transverse slit through its wall on one side of the boss axis, portions of said skirt on the transversely slit side of the piston also being slit longitudinally between its connections to said bosses to provide a peripheral main bearing portion in the said transversely slit side of

said piston that is capable of yielding in response to pressure from the engine cylinder during operation of the piston.

37. A single-piece, integral piston for operation in an internal combustion engine cylinder, comprising a head, spaced wrist pin bosses, a longitudinally slitted one piece skirt that is yieldable in response to cylinder wall pressure having cylinder-engaging faces disposed at opposite sides of the axis of said bosses and designed to yieldingly engage the walls of the cylinder during operation, said head and skirt being separated at the upper end of each of said cylinder-engaging faces, and means yieldingly connecting the skirt to said head including means connecting the bosses and the skirt, said means connecting said bosses and said skirt being substantially rigid in the direction transverse to the axis of the bosses, whereby said head portion may expand and contract during operation of said piston without binding engagement of the skirt with the walls of the cylinder.

38. A single-piece, integrally cast piston for use in an engine, comprising a head, wrist pin bosses having a common axis, a skirt, and means connecting said head and bosses and skirt together, said skirt being integral and having a main bearing portion disposed on each side of the said wrist pin boss axis and designed to take the side thrust produced by the angularity of the connecting rod of the engine, said piston having a transverse slit through its wall on both sides of the boss axis, one only of said main bearing portions being slit longitudinally between its connections to said bosses to provide a peripheral bearing portion therein that is capable of yielding outward and inward movement relative to the head during operation of the piston.

39. A piston for an engine cylinder comprising a skirt, a head separated from the skirt wall around its entire periphery, said skirt being longitudinally slit to render the skirt wall yieldable on every diameter in response to cylinder wall pressure, wrist pin bosses, and means rigidly connecting said bosses to the head and yieldingly connecting said bosses to the skirt whereby said skirt is yieldable in response to cylinder wall pressure.

40. A piston for an engine cylinder comprising a cylindrical skirt that is longitudinally slit and yieldable on every diameter in response to cylinder wall pressure, a pair of wrist pin bosses having a common axis, said skirt being integral and having a main cylinder bearing portion on each side of the axis of said wrist pin bosses, a head peripherally separated from at least one of said main cylinder-bearing portions, and means connecting the bosses with the skirt, said means being yieldable in the direction of the boss axis and substantially rigid in the direction transverse to said axis, whereby said head may freely expand and contract during operation of the piston when expansion of the skirt is restrained.

41. A piston comprising a head, a pair of spaced wrist pin bosses rigidly carried by the head and having a common axis, a skirt that is separated from the head on each side of the wrist pin bosses and longitudinally slit between the bosses on one side only of the bosses to render the skirt circumferentially yielding on that side of said bosses and circumferentially non-yielding on the opposite side of said bosses, and means substantially non-yielding in the direction transverse to the boss axis connecting the bosses with the skirt.

42. A piston for an engine cylinder comprising, a head, and an integral guide portion having diametrically opposite cylinder-engaging parts thereof designed to receive the thrust of a connecting rod during operation, one of said cylinder-engaging parts being rigidly connected to the head in the direction of load thrust from the connecting rod, the opposite cylinder-engaging part being yieldable relative to the head in response to cylinder wall pressure, whereby thermal expansion of said piston will not cause it to seize in the cylinder during operation.

43. A piston for an internal combustion engine cylinder, comprising a head portion carrying packing means and an integral guide portion integral with the head portion and having diametrically opposite cylinder-engaging parts thereof designed to receive side thrust from a connecting rod, one of said cylinder-engaging parts being slit longitudinally to render it materially more yielding than the opposite cylinder-engaging part.

In testimony whereof I affix my signature.

EDWARD J. GULICK.

7

CERTIFICATE OF CORRECTION.

Patent No. 1,815,733. Granted July 21, 1931, to

EDWARD J. GULICK.

It is hereby certified that error appears in the printed specification of the above numbered patent requiring correction as follows: Page 5, line 33, claim 30, for the word "separating" read and separated; and that the said Letters Patent should be read with this correction therein that the same may conform to the record of the case in the Patent Office.

Signed and sealed this 22nd day of September, A. D. 1931.

(Seal)

M. J. Moore,
Acting Commissioner of Patents.

DISCLAIMER

1,815,733.—*Edward J. Gulick*, Elkhart, Ind. PISTON. Patent dated July 21, 1931. Disclaimer filed December 31, 1938, by the assignee, *The Cleveland Trust Company*.

Hereby enters this disclaimer to claims 6, 7, 17, 29, 31, 35, 37, 39, and 40 of said patent.

[*Official Gazette January 24, 1939.*]

BLANK PAGE

[fols. 1291-1298] **PLAINTIFFS' EXHIBIT No. 3**

Jardine Patent in Suit

U. S. Patent No. 1,763,523, June 10, 1930,

To F. Jardine

Piston

(Filed January 27, 1934)

June 10, 1930. F. JARDINE 1,763,523

PISTON

Original Filed March 11. 1920 2 Sheets-Sheet 1

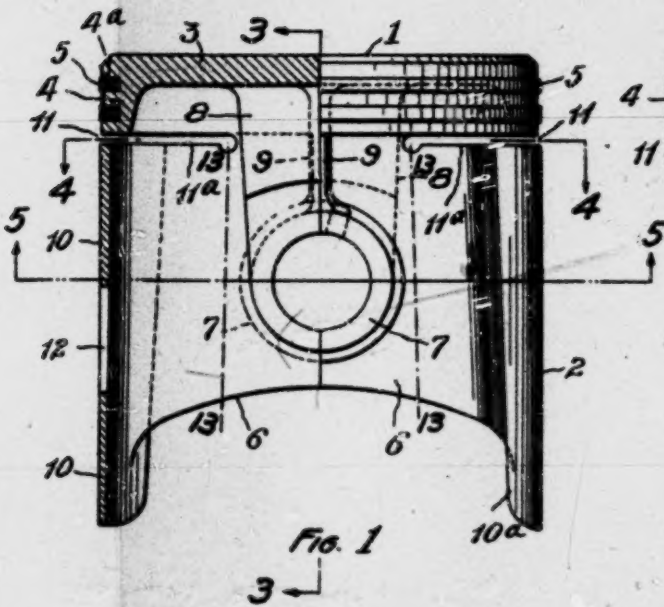

Fig. 1

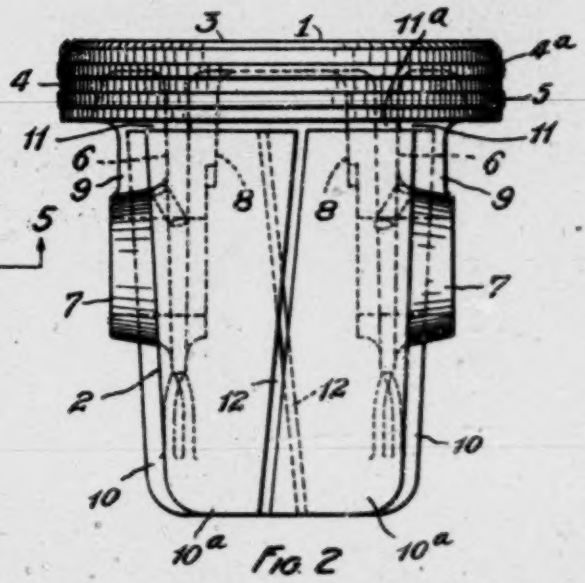

Fig. 2

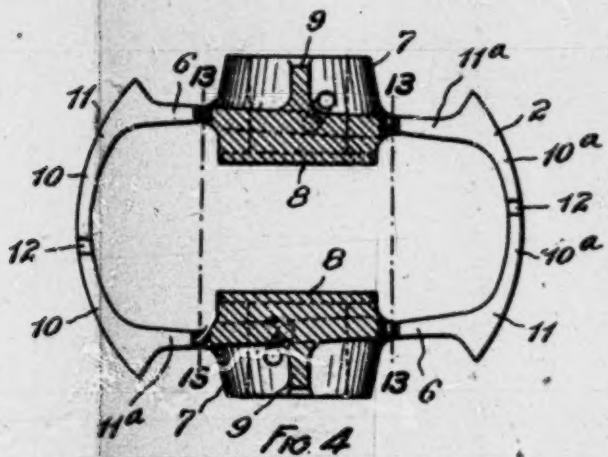

Fig. 4

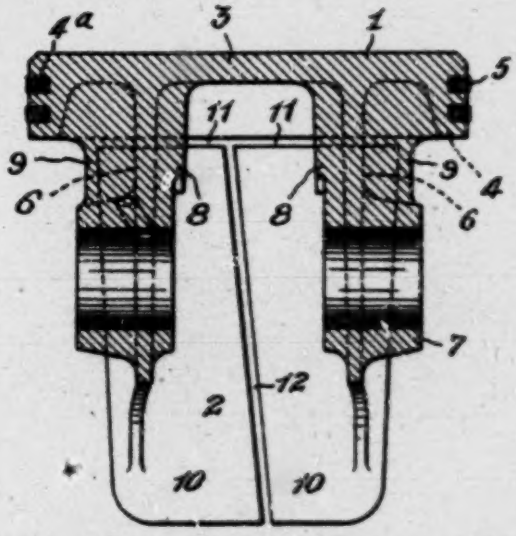

Fig. 3

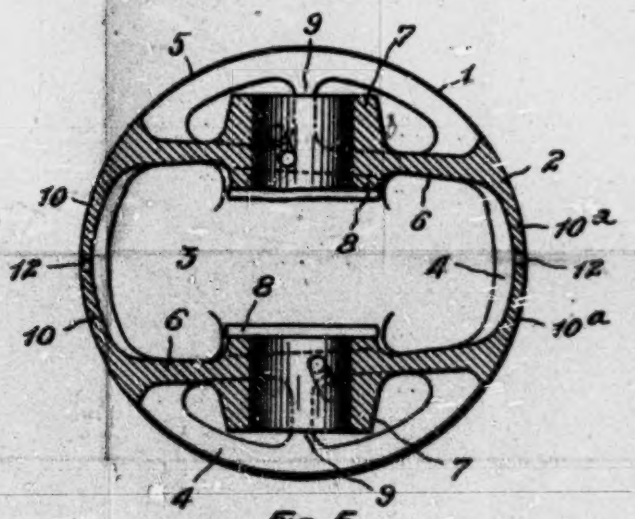

Fig. 5

INVENTOR:
Frank Jardine
BY
Kay & Kay
ATTORNEY.

BLANK PAGE

540

June 10, 1930. F. JARDINE 1,763,523

PISTON

Original Filed March 11. 1920 2 Sheets-Sheet 2

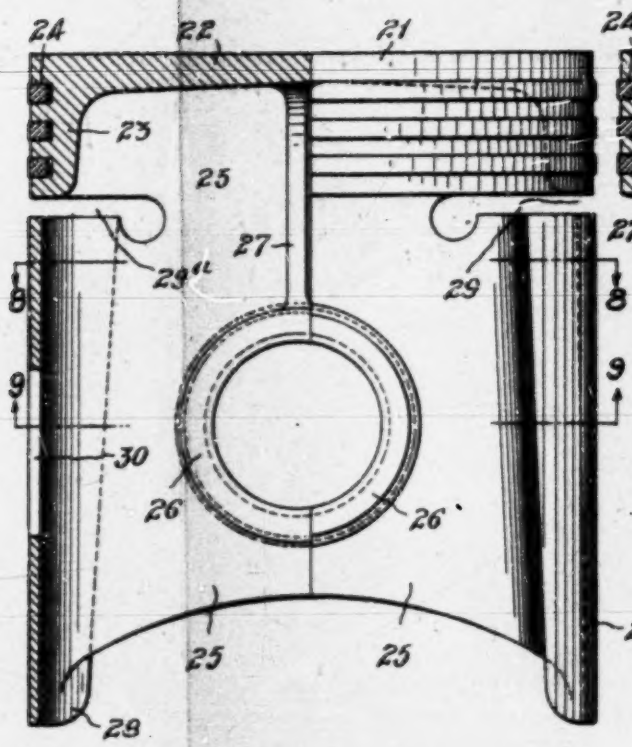

Fig. 6

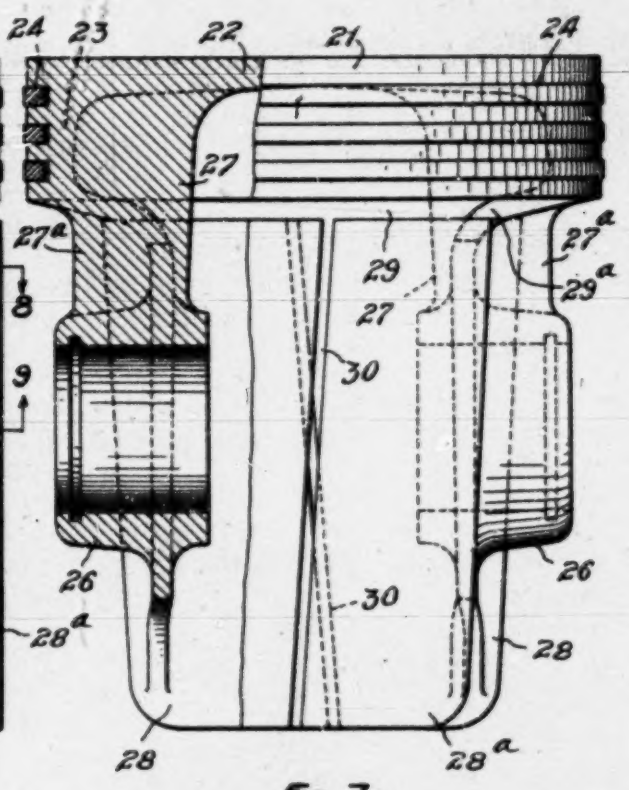

Fig. 7

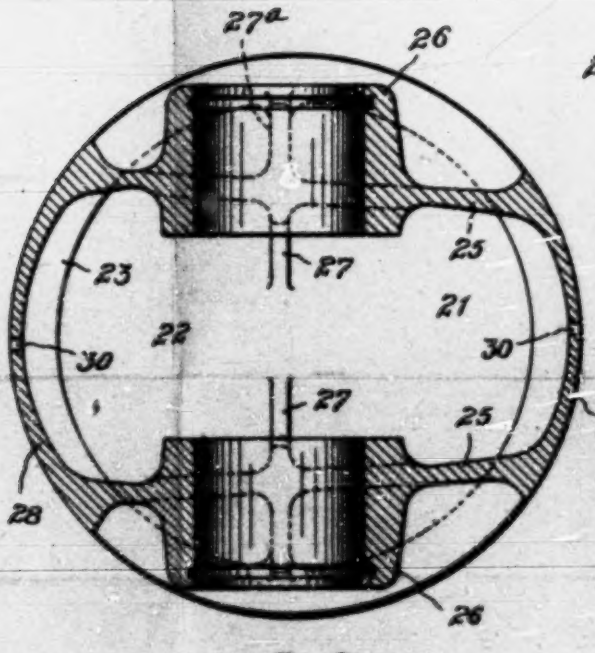

Fig. 9

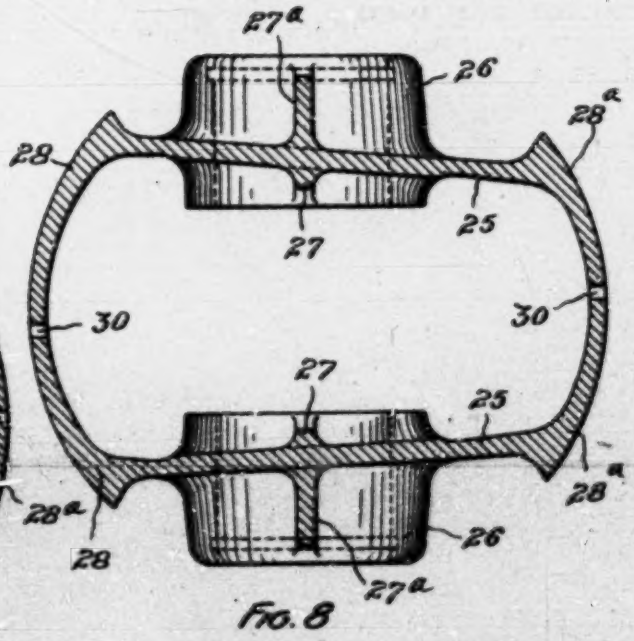

Fig. 8

INVENTOR:
Frank Jardine
BY Ray S. Fehr
ATTORNEY

Patented June 10, 1930 1,763,523

UNITED STATES PATENT OFFICE

FRANK JARDINE, OF CLEVELAND, OHIO, ASSIGNOR, BY MESNE ASSIGNMENTS, TO THE CLEVELAND TRUST COMPANY, AS TRUSTEE, OF CLEVELAND, OHIO, A CORPORATION OF OHIO

PISTON

Application filed March 11, 1920, Serial No. 364,997. Renewed March 9, 1921. Serial No. 450,828.

My invention relates to pistons for internal combustion engines and especially to pistons formed of light weight metals or alloys.

The invention has for its chief object the construction of a light alloy piston which, with relatively small initial clearance, will operate satisfactorily at all temperatures in an engine cylinder.

Another object of the invention is to produce a piston of the character noted that will lend itself to economic methods of manufacture.

Because of the high co-efficient of expansion of suitable light alloys such as aluminum alloys, as compared with iron, it is often difficult to fit an internal combustion engine satisfactorily operable with iron pistons, with light alloy pistons so that such pistons will not be noisy and will not pump oil when cold, or will not stick or score the cylinder wall when heated. I have found that these difficulties can be overcome by constructing a piston with its skirt or guide portion supported and slotted or divided in a manner to permit deformation and deflection of parts thereof without interfering with the performance of the essential functions of the respective parts.

To facilitate an understanding of the invention two forms or embodiments thereof are described hereinafter and are illustrated in the accompanying drawings in which

Fig. 1 is a view partly in side elevation and partly in section of a piston constructed in accordance with my invention.

Fig. 2 is a side elevation of the same piston viewed at right angles to Fig. 1.

Fig. 3 is a section on the line 3—3 of Fig. 1.

Fig. 4 is a section on the line 4—4 of Fig. 1.

Fig. 5 is a section on the line 5—5 of Fig. 1.

Fig. 6 is a view partly in side elevation and partly in section of a piston of modified form.

Fig. 7 is a side elevation of the same viewed at right angles to Fig. 6 and with parts broken away and shown in section.

Fig. 8 is a section on line 8—8 of Fig. 6.

Fig. 9 is a section on line 9—9 of Fig. 6.

Referring first to Figs. 1 to 5, the piston shown comprises a head portion 1 and a guide or skirt portion designated in its entirety by 2. The head portion consists of a head disc 3 and a peripheral flange 4 in which are grooves 4^a for the ordinary piston rings 5. On the lower face of the head disc 3 are formed two depending webs 6 integral with the disc. These webs carry bosses 7 which are adapted to receive the ordinary wrist pin. Ribs 8 may be provided along the webs 6 between the head disc and the bosses for strengthening the webs 6 and supporting the inner ends of the bosses. Additional ribs 9 may be formed on the outer sides of webs 6 as shown to strengthen them and to support the outer ends of the bosses.

The guide portion 2 comprises two pairs of guide segments 10 and 10^a curved to conform to the engine cylinder, one pair being located on either side of the bosses. The segments are integral with the webs 6 and are supported and connected to the head portion 1 by means of these webs. The segments at their upper ends are separated from the flange 4 of head portion 1 by slots 11 and are further isolated from the head by slots 11^a formed in webs 6. The segments of each pair are separated from one another by a longitudinally extending slot 12, said slot preferably being inclined or spirally arranged as shown. In the construction shown the guide portion formed by segments 10^a is designed to take the diagonal thrust of the piston rod during the compression stroke of the engine and as said thrust is less than the corresponding thrust during the explosion stroke, said portion 10^a is made narrower circumferentially than the other portion 10 so as to save weight.

The flange 4 of the head portion 1 has a smaller outer diameter than the guide portion 2, the diameter of the latter being only slightly smaller than the internal diameter of the cylinder in which it is to function.

In the operation of an internal combustion engine the piston usually is heated to a higher temperature than the cylinder wall and expands radially to a greater amount than the cylinder. This expansion reduces the clearance between the piston skirt or guide part and the cylinder wall and in the case of pistons not constructed according to

my invention, if the initial clearance provided is small, scoring of the cylinder walls or piston, or seizure of the piston in the cylinder may result. With my invention, however, the guide segments 10, 10ª, are capable of deformation or displacement as the piston guide parts expand, the segments being forced toward one another so as to tend to close up the slots 12. The webs 6 and guide segments preferably are so designed that this displacement of the segments 10, 10ª, is permitted by virtue of a bending of the webs 6 at points remote from the guide segments. To this end, as shown in Fig. 4, the thickness of the guide segments is increased toward the webs 6 and the webs 6 are decreased in thickness from the guide portions inward toward the bosses to points in line with the inner ends of the slots 11ª. This gives in effect a cantilever structure weakest at its support, namely, along the dotted lines 13 in Figs. 1 and 4. Thus the reaction force of the cylinder wall on the outer faces of the guide segments as the piston expands tends to cause bending of the webs 6 along said lines 13. Due to the bending of the web sections 6 and the forcing together of each pair of segments, the guide part of the piston may undergo a considerable thermal expansion without a corresponding increase in the outer diameter thereof and thus a small initial clearance can be used without danger of scoring or seizure of the piston.

By variation of the thickness and design of the webs 6 and the location of the slots 11ª therein, the force necessary to cause the guide segments 10 and 10ª to approach one another along the slot 12, or in effect to maintain the outer diameter of the piston substantially constant, can be easily regulated. The webs 6 will tend to bend along a line extending vertically downward from the ends of slots 11ª and if said slots are terminated closer to the guide segments 10, 10ª the region of bending will be moved outward correspondingly. Likewise a thickening of the webs 6 near the bosses will tend to move the point of bending or flexing closer to the guide segments 10, 10ª. An increase of the thickness of the webs 6 obviously will increase the force necessary to cause the guide segments 10, 10ª to approach one another along the slot 12.

In Figs. 6 to 9 a modified form of piston is shown. The head portion 21 is formed with a head disc 22 and a depending peripheral flange 23 in which may be formed grooves 24 for the ordinary piston rings. Depending webs 25 are formed at diametrically opposite parts of the lower edge of the peripheral flange 23. These webs carry bosses 26 for the customary wrist pin, the inner ends of the bosses being supported by ribs 27 which join the webs 25 and extend from the inner ends of the bosses 26 to the lower side of the head disc 22, while the outer ends of said bosses are supported by ribs 27ª.

On either side of the bosses 26 are formed pairs of guide segments 28 and 28ª similar to those shown in Figs. 1 to 5. These segments are united with webs 25 as shown and are separated from the flange 23 by slots 29 and further isolated from the head by slots 29ª in the walls 25. The guide segments of each pair are separated from one another by longitudinally extending slots 30.

It will be seen that this last form of construction is based upon the same principles as the first form and further detailed description is therefore unnecessary. The main difference between the last form of construction and that first described resides in the webs 35 which support the wrist pin bosses and the guide portions, said walls being joined to the head structure at the lower edge of the ring flange 23 rather than springing from the head disc as in the first form of construction.

From the foregoing description the operation of pistons embodying my improvements will readily be understood. It will be seen that an aluminum alloy piston embodying my invention can be fitted to the engine cylinder with a very small clearance and that compensation for the relatively large thermal expansion of the guide section of the piston is provided by the displacement of the guide segments which results from the reaction force of the cylinder wall on the outer faces of the guides. As above indicated the reaction force necessary to displace the guide parts and effect such compensation can readily be controlled by properly forming and proportioning the guide parts. In this connection it will be obvious to the designer that account must be taken of such factors as compression pressures, piston diameter and piston stroke as determining the lateral thrust to which the guide parts will be subjected. It is obvious that the compensating displacement of the guide parts should require a thrust great enough to insure adequate mechanical strength of the piston and small enough to obviate scoring of the piston and cylinder or seizure of the piston.

While I have shown my invention applied to the slipper type of piston as distinguished from the skirt type it is to be understood that the invention is essentially applicable to other forms of construction, the scope of the invention being indicated by the appended claims.

What I claim is—

1. In a piston for an internal combustion engine, the combination of a head having ring grooves therein, a plurality of webs integral with said head and having diametrically opposite piston pin bosses therein, a skirt integral with said webs relieved adjacent said webs and separated from the head by cir-

cumferential slots and provided with a longitudinal slot connecting the lower end of the piston with one of the circumferential slots.

2. In a piston for an internal combustion engine the combination of a head comprising a head disc and a peripheral flange having ring grooves therein, a pair of chordal webs, substantially rectangular in shape and located opposite each other in the piston, connected integrally at their upper edges to the peripheral flange of the piston, diametrically opposite wrist pin bosses, one in each of said webs, a skirt for said piston integrally connected to each of the side edges of the webs and cut away so as to expose each of the rectangular webs and the piston pin bosses from the outside of the piston, said piston being provided with circumferential slots between the skirt and head and with a longitudinal slot extending from one of the circumferential slots to the open end of the piston.

3. An internal combustion engine piston comprising a head having a depending ring flange, webs integrally cast to the ring flange and depressed within the circumference defined by the ring flange, wrist pin bosses cast in the webs, and curved guide means integrally cast to the webs and provided with a longitudinal slit disposed between the ends of the webs on one side of the piston, the outer surface of the guide means being disposed in a circumference outwardly of the outer surface of the webs and merging into the latter at included angles sufficiently great to permit the removal of a permanent mold part used to form the outer surface of the piston.

4. In a piston for an internal combustion engine, the combination of a head having a depending circumferential flange provided with ring grooves on the exterior thereof, chordal webs integral with the head and depending therefrom in opposite positions, piston pin bosses, one located in each web opposite each other, a skirt portion cut away from the head to expose the bosses in the webs and provided with curved bearing faces integral with the webs and connected to the ends of the webs opposite each other, each of said bearing faces being separated from the head except for the integral connection through the webs and one of said bearing faces having a substantially vertical slot therein.

5. In a piston for an internal combustion engine, the combination of a head having a depending circumferential flange provided with ring grooves on the exterior thereof, chordal webs integral with the head and depending therefrom in opposite positions, piston pin bosses one located in each web opposite each other, ribs integral with and substantially perpendicular to the webs joining the webs and the head, a skirt portion cut away from the head to expose the bosses in the webs provided with curved bearing faces integral with the webs and connected to the ends of the webs opposite each other, each of said bearing faces being separated from the head except for the integral connection through the webs and one of said bearing faces having a substantially vertical slot therein.

6. In a piston for an internal combustion engine, the combination of a head having a depending circumferential flange provided with ring grooves on the exterior thereof, chordal webs integral with the head and depending therefrom in opposite positions, piston pin bosses, one located in each web opposite each other, ribs integral with and substantially perpendicular to the webs joining the webs, the bosses and the head together, a skirt portion cut away from the head to expose the bosses in the webs and provided with curved bearing faces integral with the webs and connected to the ends of the webs opposite each other, each of said bearing faces being separated from the head except for the integral connection through the webs and one of said bearing faces having a substantially vertical slot therein.

7. A piston for an internal combustion engine comprising a head portion having a depending ring flange, a skirt portion, said skirt portion comprising a pair of substantially parallel webs carried by the head portion and provided with opposed wrist pin bosses, bearing portions carried by the ends of said webs and separated from the head by air gaps, the laterally outer faces of said web portions being free from laterally overhanging edge portions of the bearing faces, one of said bearing faces being provided with a longitudinal slot disposed intermediate the end portions of said bearing face.

8. In a piston for an internal combustion engine, the combination of a head havin ; a cylindrical ring flange, oppositely disposed webs integral with the flange and carrying diametrically opposite piston pin bosses, a skirt integral with said webs and cut away to expose the sides of said webs and separated from the ring flange by circumferential slits and provided with a longitudinal slit disposed between the ends of the webs.

9. In a piston for an internal combustion engine, the combination of a head comprising a disc and a peripheral flange having ring grooves therein, a pair of chordal webs connected to the flange of the head by outwardly flaring extensions, oppositely disposed wrist pin bosses in the webs, and a cylindrical skirt cut away to expose the webs and integrally connected to the ends of the latter, the skirt being separated from the head between the said webs by circumferential slits and the skirt having a longitudinally extending slit disposed between the ends of the webs on one side of the piston.

10. In a piston for an internal combustion engine, the combination of a piston head including a depending ring flange, oppositely disposed webs depending from the ring flange and disposed inwardly thereof, wrist pin bosses in the webs, and curved bearing means integrally connected to the webs and separated from the head by air gaps extending circumferentially of the piston between the ends of the webs, the said bearing means having a slit located between the ends of the webs and extending in a direction lengthwise of the piston.

11. In a piston of an internal combustion engine, the combination of a piston head having a cylindrical ring flange depending therefrom, webs integral with the flange extending convergingly inwardly of the piston from the opposite portions of the flange and then lengthwise of the piston in substantially paraliel arrangement, wrist pin bosses in the webs, and a skirt joined to the ends of the webs on opposite sides of the bosses and cut away to expose substantially all of the sides of the webs, all the foregoing parts being integrally connected together, there being circumferentially extending air gaps separating the head and skirt between the webs and a slot in one side of the skirt between the ends of the webs and extending in a direction lengthwise of the piston.

12. In a piston for an internal combustion engine, the combination of a piston head comprising a disc with a depending peripheral ring flange, a skirt separated from the head by circumferentially extending air gaps, chordal webs integrally connected at their ends to the skirt with their outer surfaces near the points of connection with the skirt diverging outwardly to merge into the outer surfaces of the skirt, wrist pin bosses integrally formed with the webs, and integral connections between the depending flange of the head and the adjacent ends of the webs, said connections extending from the flange inwardly and lengthwise of the piston and merging into the webs with outwardly diverging surfaces, the skirt having a longitudinally extending slit formed on one side thereof between the ends of the webs.

In testimony whereof, I hereunto affix my signature.

FRANK JARDINE.

[fols. 1299-1304] **PLAINTIFFS' EXHIBIT No. 4**

Maynard Patent in Suit

U. S. Patent No. 1,655,963, January 10, 1928,

To H. E. Maynard

Piston

(Filed January 27, 1934)

Jan. 10, 1928. 1,655,968

H. E. MAYNARD

PISTON

Filed Jan. 3, 1921

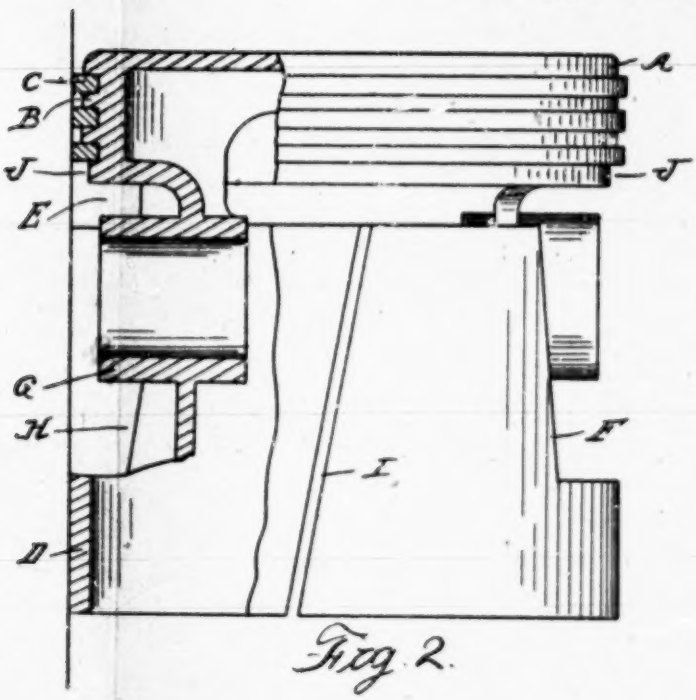

Fig. 2.

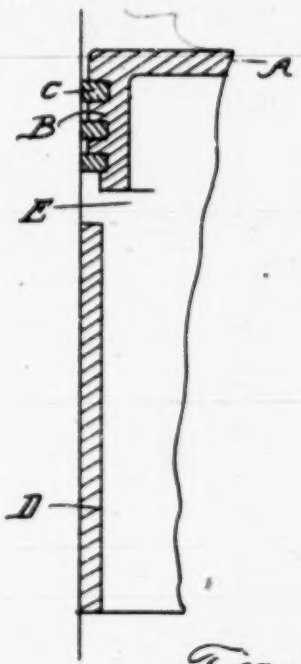

Fig. 3

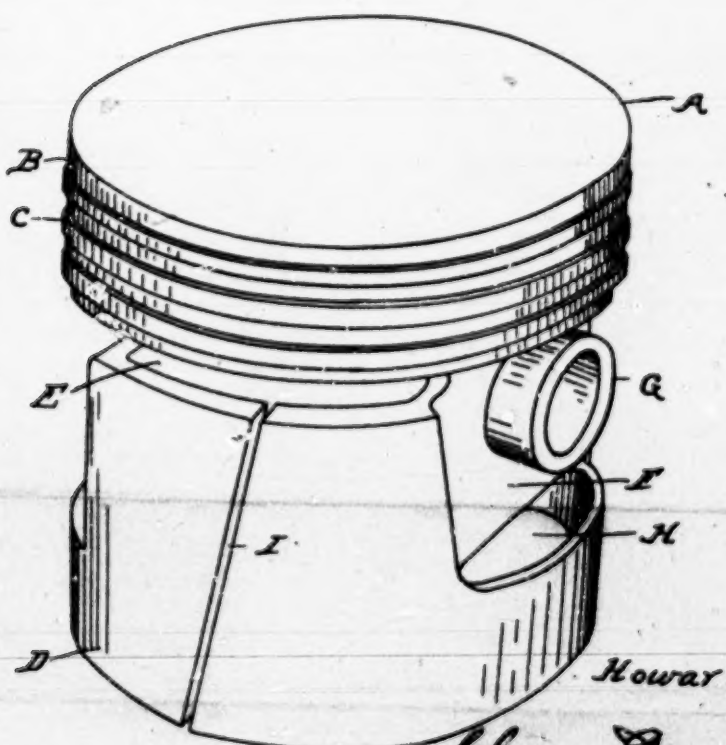

Fig. 1.

Inventor
Howard E. Maynard

By Whittemore, Hulbert & Whittemore

Attorneys

Patented Jan. 10, 1928. 1,655,968

UNITED STATES PATENT OFFICE.

HOWARD E. MAYNARD, OF DETROIT, MICHIGAN, ASSIGNOR, BY DIRECT AND MESNE ASSIGNMENTS, OF ONE-HALF TO CHRYSLER CORPORATION, OF HIGHLAND PARK, MICHIGAN, A CORPORATION OF DELAWARE, AND ONE-HALF TO ALUMINUM COMPANY OF AMERICA, OF PITTSBURGH, PENNSYLVANIA, A CORPORATION OF PENNSYLVANIA.

PISTON.

Application filed January 3, 1921. Serial No. 434,467.

The invention relates to pistons designed for use in internal combustion engines and has for its object the prevention of "pumping" of oil and the "freezing" due to excessive expansion. In the present state of the art it is usual to construct pistons with a cylindrical ring portion having a relatively large clearance with reference to the diameter of the cylinder, and a skirt portion more closely fitting the same and which holds the piston in proper alignment and prevents side slapping. To avoid sticking or freezing of this skirt, due to expansion, certain constructions of pistons have provided the skirt with a longitudinal slot therein to compensate for expansion, but there is one serious difficulty with all such constructions, viz, the tendency for the lubricating oil to work up beyond the skirt and rings and into the explosion chamber. This results in the formation of carbon and other difficulties incident thereto. With the present invention I have overcome this difficulty by arranging between the cylindrical ring portion and the skirt portion a continuous annular groove. This will receive the oil creeping past the skirt and permitting the same to drop back in the cylinder without providing any bridge for its passage to the ring portion. The result is that the cylinder will be fully lubricated, while the excess of lubricant will be scraped off by the lowermost piston rings into the annular groove, where it is permitted to drop back into the cylinder.

In the drawings:

Figure 1 is a perspective view of my improved construction;

Figure 2 is a transverse section thereof; and

Figure 3 is a similar view in plane at right angles to Figure 2.

A is the piston head having a depending cylindrical portion B grooved to receive the rings C and of a diameter to afford abundant clearance within the engine cylinder. D is a skirt, which is preferably of a diameter to closely fit the cylinder. This skirt is itself discontinuous with the cylindrical portion B of the piston, being separated therefrom by a groove E, which extends completely around the same. The connection between the two parts is formed by webs F on diametrically opposite sides of the piston, said webs extending inward from the portion B and vertically downward and having formed integral therewith the bearings G for the wrist pin. These webs are connected to the skirt on their opposite vertical edges, but are not connected thereto either at top or bottom. Thus there are formed the recesses H surrounding the bearings G with segmental skirt portions on opposite sides thereof and an annular skirt portion below said segmental skirt portions. One of the sides of the skirt between the points of attachment of the webs thereto is longitudinally slitted, as indicated at I, and this slit compensates for expansion and permits the skirt to conform itself to the cylinder.

With the construction as described, when the piston is in operation, the lubricant upon the wall of the cylinder is spread by the skirt portion of the piston and will be forced upward to the groove E at the upper end of the skirt. Further creeping is prevented by this groove and when the accumulation of oil is sufficient, it will drop back inside of the skirt. At no time is there a body of the oil adjacent to the piston rings and for this reason when the engine is upon suction stroke, any leakage past the ring cannot draw oil upward. As a further safeguard, the cylindrical portion B below the lowermost of the ring C is cut away to provide a further clearance, as indicated at J, this clearance being sufficient to prevent the bridging of the oil thereacross. Thus on each downward stroke of the piston, the lowermost ring will scrape all surplus oil from the surface of the cylinder and in the upward stroke the oil thus accumulated will pass through the groove E and downward. Any oil accumulating in the recesses H will follow down the webs F and there is no chance at any point for the accumulation of oil adjacent to the rings.

What I claim as my invention is:

1. A piston comprising a head having a cylindrical ring portion depending therefrom and a skirt portion arranged beneath said ring portion and separated therefrom by a continuous annular groove, said skirt having a pair of spaced segmental portions, webs on

diametrically opposite sides of the piston, extending inward from said cylindrical portion and vertically downward, the opposite edges of said webs being connected to the said segmental portions of the skirt, and said skirt having an annular portion below said segmental portions disconnected from the lower ends of said web.

2. A piston comprising a head having a depending cylindrical ring portion of relatively large clearance with respect to the diameter of the cylinder, and a skirt portion below said ring portion closely fitting said cylinder and separated from the ring portion by a continuous annular groove, webs on diametrically opposite sides of said piston extending inward from said cylindrical portion and downward parallel to each other, the opposite vertical edges of said webs being connected to the skirt, said skirt having an annular portion below said webs disconnected from the lower ends of said webs and there being also provided a slit completely through the skirt from the lower to the upper end thereof, and wrist pin bearings carried by said webs.

3. A piston comprising a head, a cylindrical skirt beneath said head having recesses in diametrically opposite sides thereof, parallel webs extending downwardly from said head and having the opposite side edges thereof connected to the side edges of the recesses in said skirt, separating openings being provided between the lower ends of said webs and said skirt and between the upper edges of said skirt and said head, and wrist pin bearings carried by said webs.

4. A piston comprising a head having a depending cylindrical portion provided with annular grooves, rings engaging said grooves, the cylindrical portion below the lowermost ring being cut away, a cylindrical skirt beneath the cylindrical portion of said head and having recesses in diametrically opposite sides thereof, webs extending downwardly from said head and having the opposite side edges thereof connected to the side edges of the recesses in said skirt, separating openings being provided between the lower ends of said webs and said skirt, and wrist pin bearings carried by said webs, one side of said skirt between the points of attachment of said webs thereto being slit longitudinally.

5. A piston comprising a head, a cylindrical skirt beneath said head, parallel webs extending downwardly from said head and connected to said skirt separating recesses being provided between the lower ends of said webs and said skirt and between the upper ends of said skirt and said head, one side of said skirt between the points of attachment of said webs thereto being slitted longitudinally, and wrist pin bearings carried by said webs.

6. In a piston for an internal combustion engine, the combination of a head, a plurality of webs integral with said head and having oppositely disposed wrist pin bosses mounted one in each web, a skirt integral with said webs relieved adjacent said webs to a point between the bosses and the end of the skirt, said piston being provided with circumferential slots between the piston head and skirt and with a longitudinal slot connecting the open end of the skirt with one of the circumferential slots.

7. In a piston for an internal combustion engine, the combination of a head and a plurality of webs integral with said head, diametrically oppositely disposed wrist pin bosses, one mounted in each of said webs and integral therewith, a skirt integral with said webs, relieved adjacent said webs, said relieved portion terminating between the bosses and the end of the skirt, said piston being provided with circumferential slots between the piston head and skirt, with a longitudinal slot connecting the end of the skirt with one of said circumferential slots, and with other circumferential slots between the end of the webs and the open end of the skirt.

8. In a piston for an internal combustion engine, the combination of a head provided with a disc portion and a flange portion and with ring grooves in the flange portion, a pair of substantially rectangular shaped webs integral with and depending from the flange portion of the head, a pair of oppositely disposed wrist pin bosses mounted one in each of said webs, a cross rib in said head and integral with the disc portion and flanges of the head and with said web and piston pin bosses, a skirt for said piston extending below said webs and integrally connected to the side edges of each of said webs, said piston being provided with circumferential slots between the skirt and head, with a longitudinal slot connecting one of said circumferential slots with the bottom edge of the skirt and with circumferential slots between the lower edges of the webs and the adjacent portion of the skirt.

9. A piston for an internal combustion engine, comprising a head, oppositely disposed walls depending from and connected at their upper ends to the head, bosses carried by the said walls out of direct contact with the head, and a skirt structure including two oppositely disposed bearing portions joined together by extensions below each of the said bosses and indirectly connected to the head by the said walls, the skirt structure being separated, by air gaps, from the head at its upper edge, and from the said walls below the bosses.

10. A piston for an internal combustion engine comprising a head, oppositely disposed walls depending from and connected at their upper ends to the head, the walls being depressed within the maximum diameter

of the piston, bosses carried by the said walls out of direct contact with the head, and a skirt structure, including two oppositely disposed bearing portions joined together by extensions below each of the said bosses and indirectly connected to the head by the said walls, the skirt structure being separated, by air gaps, from the head at its upper edge, and from the said walls below the bosses.

11. A piston for an internal combustion engine comprising an integral head and skirt, the said skirt consisting of oppositely disposed cylinder engaging bearing walls separated from the head by circumferential slots, a slot extending lengthwise of one of the said bearing walls, depressed walls connecting the said bearing walls, and other cylinder engaging walls connecting the first said bearing walls and separated from the said depressed walls by circumferential slots.

In testimony whereof I affix my signature.

HOWARD E. MAYNARD.

BLANK PAGE

[fols. 1305-1308] **PLAINTIFFS' EXHIBIT No. 5**

Schmiedeknecht Patent in Suit

U. S. Patent No. 1,256,265, February 12, 1918,

To V. E. Schmiedeknecht

Piston

(Filed January 27, 1934)

V. E. SCHMIEDEKNECHT.

PISTON.

APPLICATION FILED JULY 14, 1917.

1,256,265. Patented Feb. 12, 1918.

Fig-1

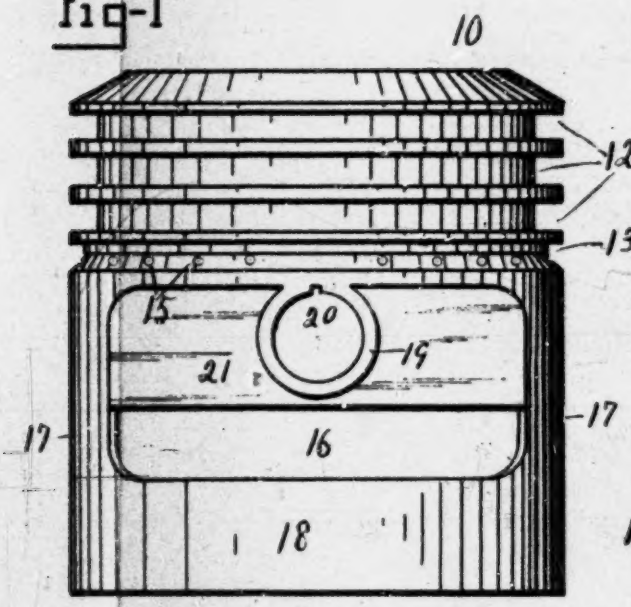

Fig-2

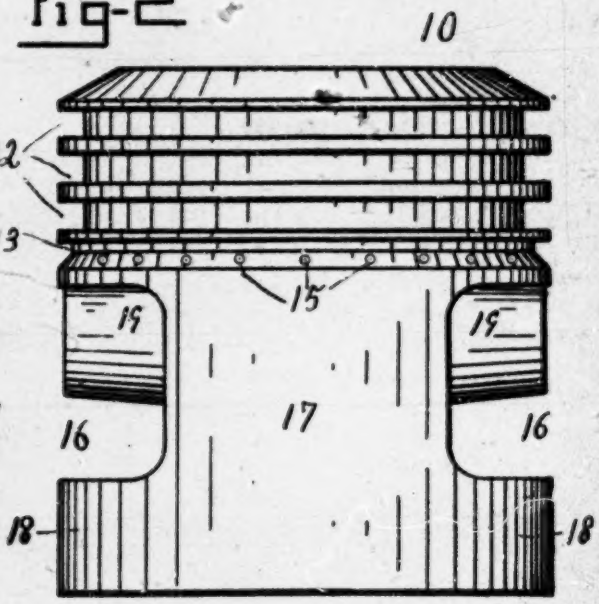

Fig-3

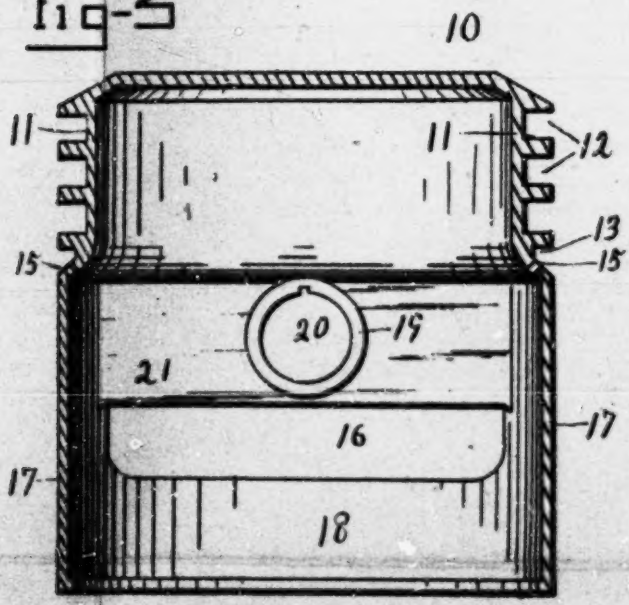

Fig-4

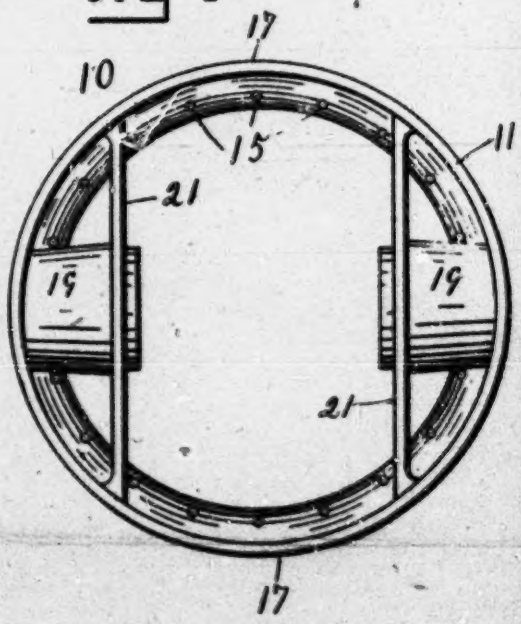

Fig-5

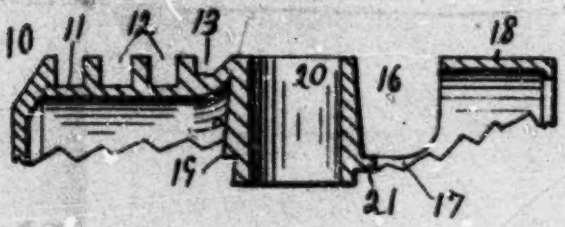

INVENTOR

Victor E. Schmiedeknecht.

BY

W. B. Munnell.

ATTORNEY

UNITED STATES PATENT OFFICE.

VICTOR E. SCHMIEDEKNECHT, OF LOUISVILLE, KENTUCKY.

PISTON.

1,256,265. Specification of Letters Patent. Patented Feb. 12, 1918.

Application filed July 14, 1917. Serial No. 180,511.

To all whom it may concern:

Be it known that I, VICTOR E. SCHMIEDEKNECHT, a citizen of the United States, residing at Louisville, in the county of Jefferson and State of Kentucky, have invented a new and useful Improvement in Pistons, of which the following is a specification.

This invention relates to pistons for internal combustion motors.

It has been ascertained to be essential that pistons of internal combustion motors should be as light as possible. In accordance with accepted construction pistons are hollow cylinders, closed at one end and open at the other, a connecting rod being secured interiorly thereof intermediate of their length by means of a transverse pin. Bosses projected inward from the side walls of the piston provide bearings for the pin. It was formerly thought that a shearing stress was exerted on this pin, and that the strain was transmitted to the side walls longitudinal thereof, and that the metal being under compression, the wall could be very thin, but failure of piston walls so constructed lead to the conclusion that the connecting rod exerted a bending stress on the pin by which a lateral strain was transmitted to the walls causing them to fracture around the bosses. This discovery necessitated an increase in the thickness of the walls and the use of braces or brackets extended from the bosses to the piston head, or to the wall, but these expedients tend to increase the weight of the piston. To reduce piston weight, resort has been had to the use of metals (such as aluminum, or alloys thereof) which have a lower specific gravity than cast iron, the metal commonly used; but the coefficient of expansion of aluminum is greater than that of iron, of which motor cylinders are generally made. Consequently it is difficult to get a proper fit, for if the piston is of such size as to fit in the cylinder properly when at maximum temperature, gas and oil will leak by, when as at starting, the piston is cool.

An object of this invention is to provide a piston of minimum weight, with maximum structural strength.

To the accomplishment of the foregoing and other objects, said invention consists of the novel construction, association and relative arrangement of parts, members and features hereinafter fully described and particularly pointed out in the claims appended hereunto.

In the drawing, wherein similar reference characters designate like parts in the several views, Figure 1, is a front elevation of an embodiment of the invention: Fig. 2, a side elevation thereof: Fig. 3, a central transverse section on Fig. 1: Fig. 4, a bottom plan view: and Fig. 5, a fragmental sectional view.

Referring now in detail to the drawing, the reference character —10— designates, as an entirety, a piston, the side walls, —11— of which are provided with a plurality of grooves —12— adapted for the reception of piston rings. An oil groove —13— is located just below the groups of piston ring grooves, and from the floor of this groove, a plurality of perforations —15— lead through the wall of the piston, and serve as an avenue of escape for oil that may accumulate beneath the lower ring during the down stroke of the piston. The floor of this groove, is suitably inclined to facilitate the operation of drilling the holes 15. The only portions of the apron of the piston (*i. e.*, that portion of the wall which depends below the pin) which bear efficiently against the walls of the cylinder are those, fore and aft, which lie in the plane of the movement of the connecting rod about the pin. The side portions (those below the ends of the pin) serve to steady the piston against lateral motion. I remove portions of said apron, leaving openings —16— each of which extends circumferentially approximately one third of the distance around the piston, and longitudinally from a point just below the oil groove to within a spaced distance of the lower end of the piston, leaving a band —18— of sufficient width to give a satisfactory bearing surface. Alined bearings —19— each of which has a suitable bore —20— for the reception of a piston pin, are attached at their outer ends to the head section at the upper edge of the openings —16—, centrally thereof. The inner end of each of the bearings is supported by a transverse bridge or truss —21— joined respectively, centrally to the bearings and terminally to the edges of the portions 17 of the apron of the piston.

It is thought that the many advantages

of a piston constructed in accordance with the foregoing description will be evident to those skilled in the art.

The walls may be considerable thinner than with the usual construction, as they are not subjected to lateral strain, the bearings being supported on the inner end by a bridge supported by the side walls, which gives great rigidity to them, offering a maximum resistance to the bending strain exerted by the pin. The removal of portions of the apron also serves to reduce the weight.

It is to be understood that applicant reserves the right to resort to such changes, modifications, and variations, as may properly come within the scope of the appended claims.

Having thus described my invention so that those skilled in the art may make and use the same,

I claim:

1. A piston comprising a head section and a depending apron having oppositely disposed openings therein, alined bearings the outer ends of which are suspended from said head section within said openings, and bridges sustaining the inner ends of said bearings.

2. A piston comprising a head section, and a depending cylindrical apron, said head section being provided with a plurality of grooves for the reception of rings, and an oil groove having perforations leading from its floor to the interior of the piston, said apron having an opening below said oil groove, a bearing the outer end of which is suspended from the head section at upper edge of said opening, and a transverse bar attached respectively to the inner end of said bearing and to the apron.

3. A piston, comprising a head, and a depending apron having an opening therein, a bearing the outer end of which is attached to the head at the upper edge of said opening, and a transverse bar adapted to support the inner end of said bearing.

VICTOR E. SCHMIEDEKNECHT.

[fols. 1309-1320] **PLAINTIFFS' EXHIBIT No. 6**

U. S. Patent No. 1,402,309, Jan. 3, 1922,

To L. P. Mooers

Piston for Internal Combustion Motors

(Filed January 27, 1934)

555

L. P. MOOERS.

PISTON FOR INTERNAL COMBUSTION MOTORS.

APPLICATION FILED JUNE 2, 1917.

1,402,309. Patented Jan. 3, 1922.

3 SHEETS—SHEET 1.

Fig. 1

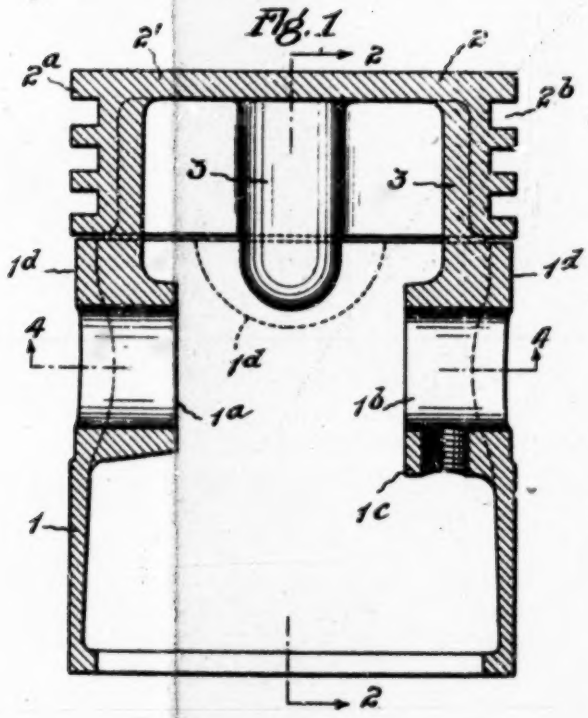

Fig. 2

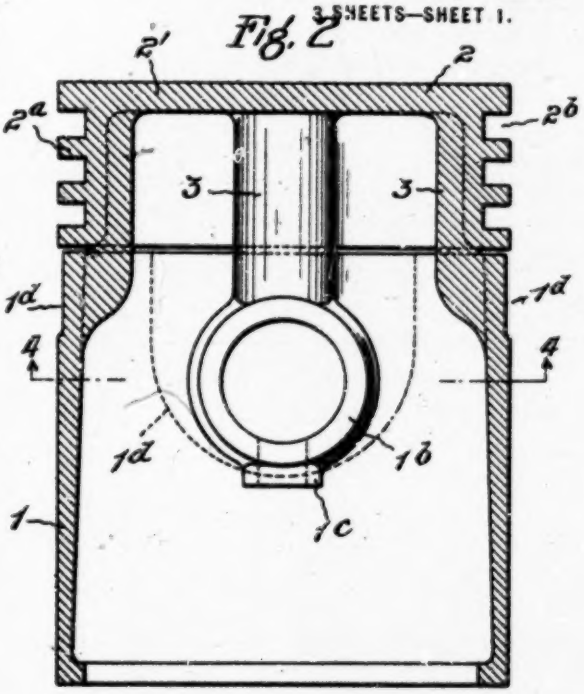

Fig. 3.

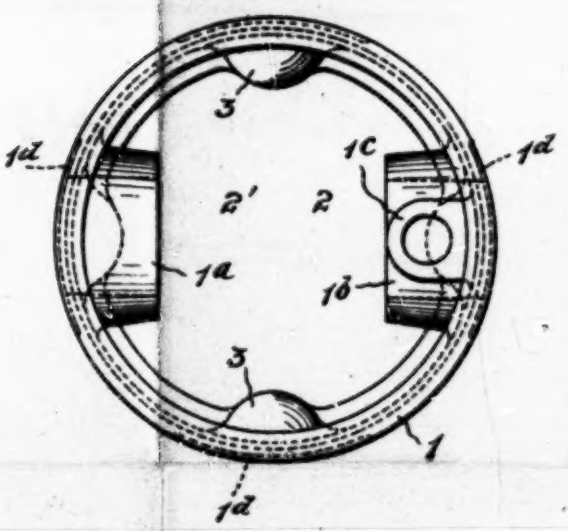

Fig. 4

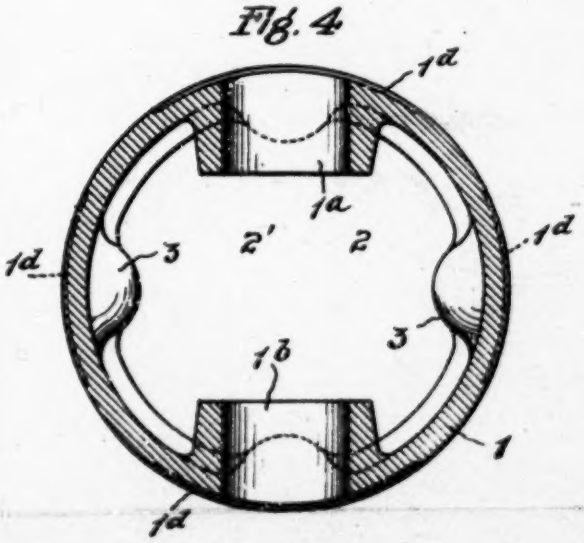

Inventor
Louis P. Mooers,
by Haynes N. Gordon
his attorney

BLANK PAGE

556

L. P. MOOERS.

PISTON FOR INTERNAL COMBUSTION MOTORS.

APPLICATION FILED JUNE 2, 1917.

1,402,309.

Patented Jan. 3, 1922.

3 SHEETS—SHEET 2.

Fig. 5

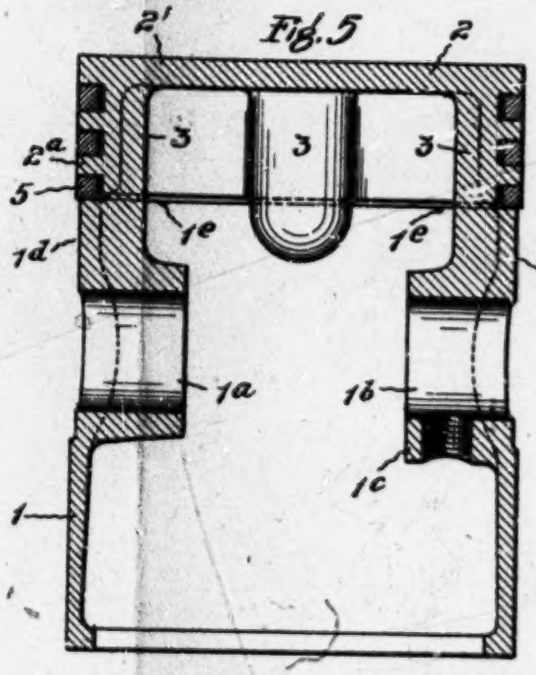

Fig. 6

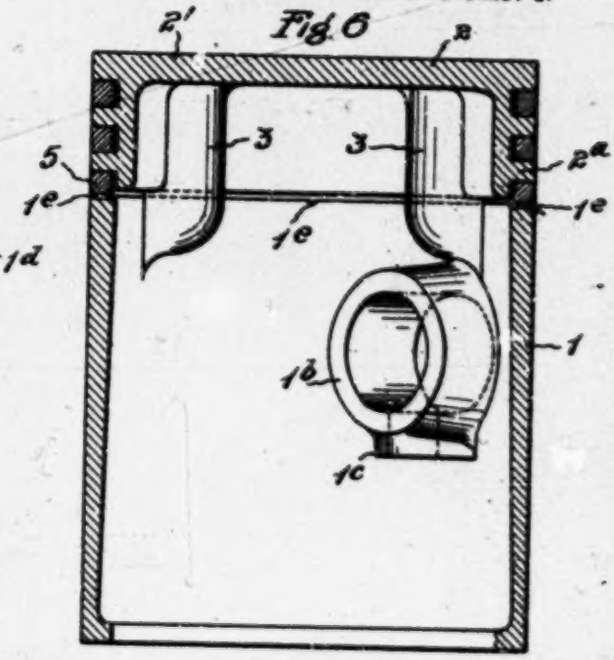

Fig. 7.

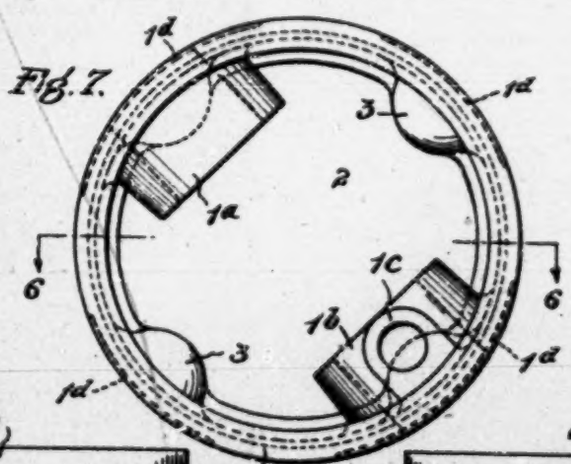

Fig. 8.

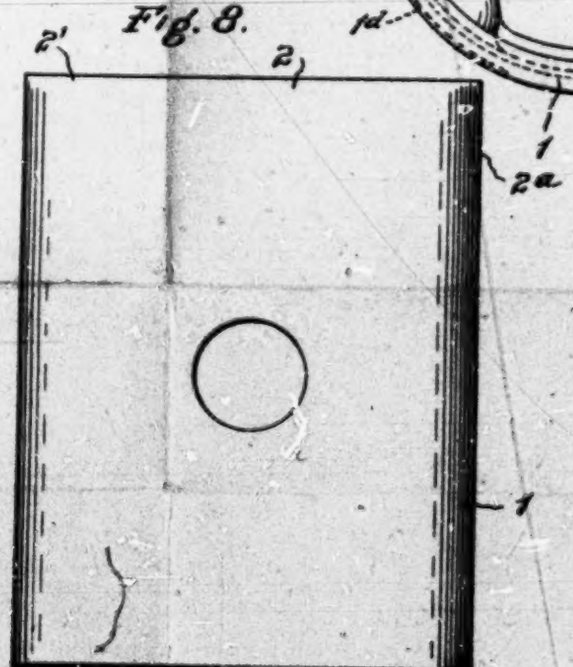

Fig. 9.

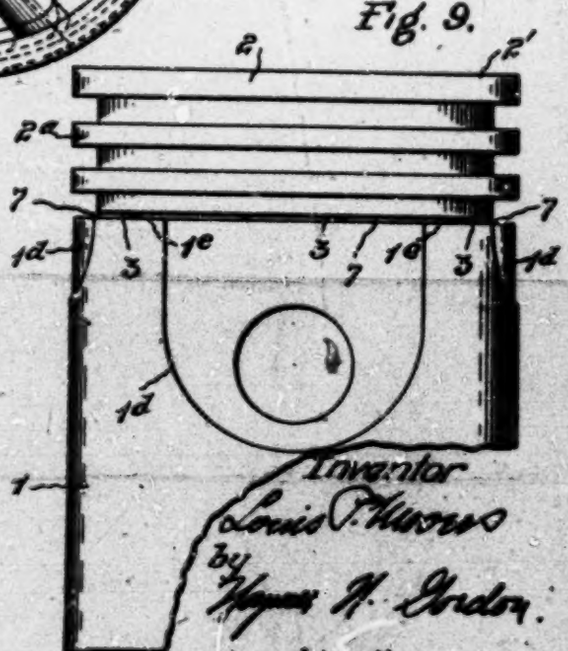

Inventor
Louis P. Mooers
by Wyman W. Gordon.
his attorney

BLANK PAGE

557

L. P. MOOERS.

PISTON FOR INTERNAL COMBUSTION MOTORS.

APPLICATION FILED JUNE 2, 1917.

1,402,309. Patented Jan. 3, 1922.

3 SHEETS—SHEET 3.

Fig. 10

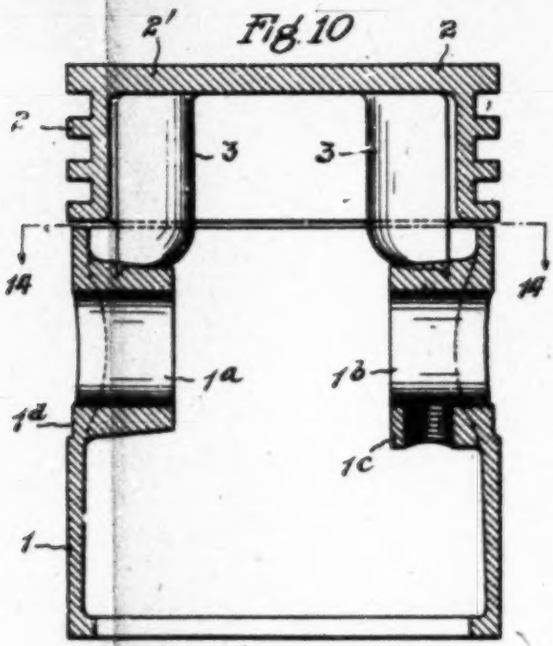

Fig. 11

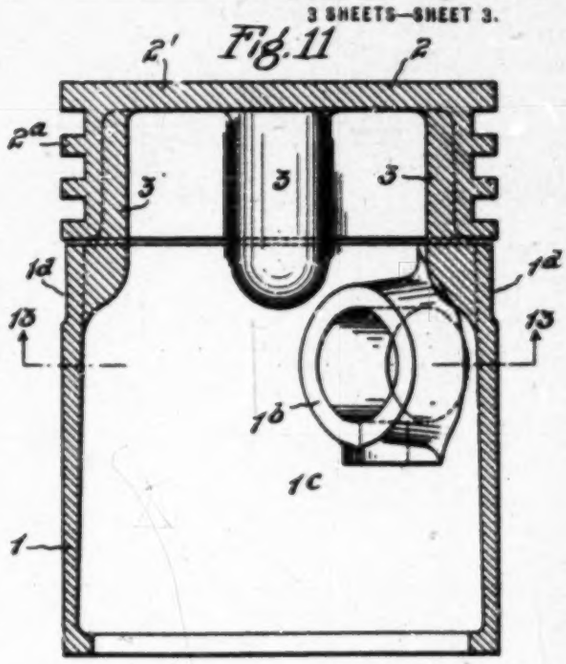

Fig. 12

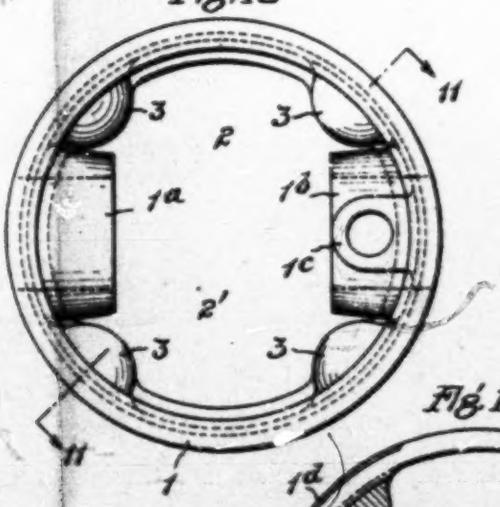

Fig. 13

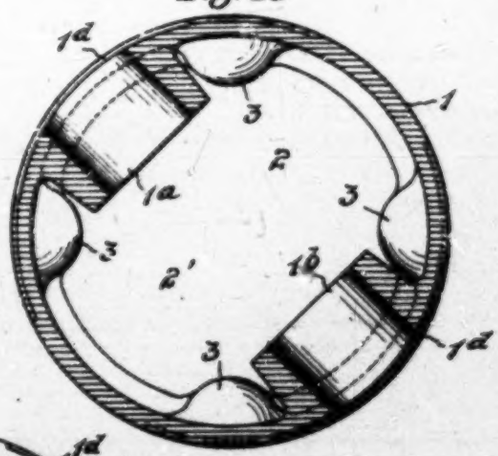

Fig. 14

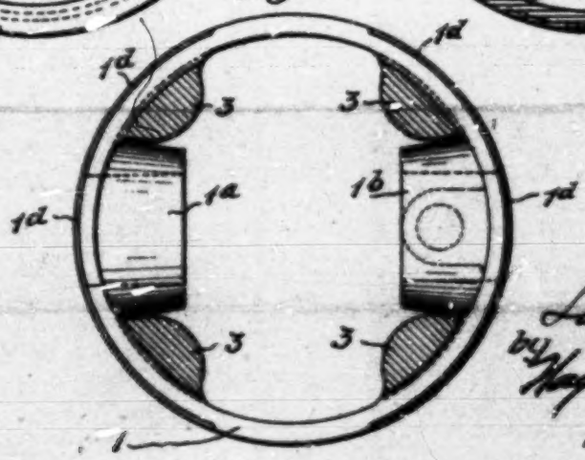

Inventor
Louis P. Mooers,
by Hayes & Gordon
his attorney

UNITED STATES PATENT OFFICE.

LOUIS P. MOOERS, OF CINCINNATI, OHIO, ASSIGNOR, BY DIRECT AND MESNE ASSIGNMENTS, TO THE CLEVELAND TRUST COMPANY, OF CLEVELAND, OHIO, A CORPORATION OF OHIO.

PISTON FOR INTERNAL-COMBUSTION MOTORS.

1,402,309. Specification of Letters Patent. Patented Jan. 3, 1922.

Application filed June 2, 1917. Serial No. 172,880.

To all whom it may concern:

Be it known that I, LOUIS P. MOOERS, a citizen of the United States, residing at Cincinnati, in the county of Hamilton and State of Ohio, have invented certain new and useful Improvements in and Relating to Pistons for Internal-Combustion Motors, of which the following is a specification.

The invention relates to improvements in pistons which are adapted especially for use in internal combustion motors.

One of the objects of my invention is to produce a simple, light, durable and efficient skirted piston peculiarly adapted to meet the conditions which exist in an internal combustion motor cylinder, including the stresses and strains imposed upon the piston, principally during the explosion stroke, and by the high heat generated at this time, which heat must be efficiently and economically (*a*) utilized in the translation of heat into mechanical energy, and (*b*) that not translated into mechanical energy properly dissipated.

My present invention comprises improvements on the joint invention of myself and Edward O. Spillman disclosed in Letters Patent of the United States No. 1,092,870.

It contemplates simplifying the construction and manufacture of pistons of this patented type and of considerably lightening the construction as compared with the integral cast structure illustrated in the said patent. It further contemplates the disposition of the parts which go to make up the piston relative to each other so that pistons embodying one form of this invention may be made readily in permanent molds.

It further contemplates the idea of dissipating the heat from the head of the piston more effectively, as concerns the wrist pin bosses, than is the case with the construction illustrated in the said Patent No. 1,092,870.

Other objects of my invention will be obvious to one skilled in the art from the description of one or more embodiments of my idea which I have herein selected to make for the purpose of a comprehensive disclosure of my improvements to one skilled in the art.

In the drawings, Fig. 1 is a longitudinal section of a piston embodying my improvements taken through the axis of the wrist pin bosses.

Fig. 2 is a section on the line 2—2, Fig. 1.

Fig. 3 is a bottom plan view looking into one of my improved pistons.

Fig. 4 is a section on the line 4—4, Fig. 1.

Fig. 5 is a longitudinal section taken through the axis of the wrist pin bosses of a modified form of piston embodying my invention.

Fig. 6 is a section on the line 6—6, Fig. 7.

Fig. 7 is a bottom plan view of the construction of piston illustrated in Fig. 5.

Fig. 8 is a side elevation of a piston casting after being taken from the mold and before any machining is done on it.

Fig. 9 is a side elevation of said piston casting after it has been externally machined and the cut made to provide the air gap between the head and the skirt section of the piston.

Fig. 10 is a longitudinal section through the axis of the wrist pin bosses of another modified form of my invention.

Fig. 11 is a section on the line 11—11, Fig. 12.

Fig. 12 is a bottom plan view of the piston construction illustrated in Fig. 10.

Fig. 13 is a section on the line 13—13, Fig. 11.

Fig. 14 is a section on the line 14—14, Fig. 10.

In Figs. 1 to 4 inclusive, 1 is the skirt, body or guide portion of the piston. 2 is the top or piston head. 3 are columns or connectors, preferably integrally formed with the skirt 1 and head 2 for connecting these two parts of the piston together. The head preferably has an end wall $2'$ and an outer peripheral wall 2^a, the latter formed preferably with suitable piston ring grooves 2^b.

Intermediate its ends the guide portion or skirt 1 is preferably formed with inwardly extending, diametrically opposed, aligned, annular wrist pin bosses 1^a, 1^a, one of which may have a downwardly or laterally extending lug 1^c formed with a screw-threaded hole to receive in the well known manner a suitable locking bolt or screw for the wrist pin (not shown).

Tightly Bound

The upper end of the guide section or skirt is separated from the head 2 by an air gap. In the drawings, purely for the purpose of illustration, this air gap is shown wider than is necessary. The presence of this air gap or air space between the upper edge of the skirt or body section 1 and the lower edge of the peripheral portion 2^a of the piston head, insures that the heat absorbed by the piston head principally will be transmitted inwardly and downwardly through the columns 3 so that such portion of it as does reach the skirt or body by conduction will do so at points below said air gap and will be reduced in amount so as to reduce relatively the expansion of the skirt as compared with the head, thereby permitting the skirt to be fitted relatively closely to the inner walls of the cylinder. While this air gap, as above indicated has been shown, for the purpose of illustration, wider than necessary, it will be understood that my invention contemplates any sort of a separated relationship between the upper end of the skirt and the adjacent head 2 because of which heat will not be transmitted efficiently or readily from the head to the skirt other than through a connector or connectors which join those two parts of the piston together. It will be understood that this relationship might be that of a poor mechanical fit or joint which would be a poor conductor of heat, as compared with the metal of the head 2 and connectors 3, so that such heat as did pass from the head 2 to the skirt 1 would do so principally by way of the connectors 3, rather than from the head to the upper end of the skirt 1 directly.

A piston of my improved construction may be made unusually light, durable and efficient by forming it of an integral casting of a metallic alloy having a relatively low specific gravity, such for example as an alloy of aluminum, copper and magnesium, or any other metallic alloy of aluminum or other low specific gravity metal known by those skilled in the art to be suitable for the construction of cast, skirted pistons. As the alloys of metals of relatively low specific gravity, suitable for such purposes, have relatively high coefficients of expansion, some difficulty has been experienced with the use of pistons made of them in interral combustion motors, due to the necessary clearance between the piston walls and the cylinder walls to allow for such expansion; as the result of which clearance, both "piston slapping" and "oil pumping" are likely to result, as is well known to those skilled in the art. Furthermore, liquid hydro-carbons are likely to escape past the piston into the crank case and thin down the lubricant below to an undesirable degree.

It will be understood that with a piston constructed in accordance with my invention, the sleeve or skirt 1 may be constructed so as relatively snugly to fit the inner walls of the motor cylinder, whereas the head 2 may be given a considerable amount of clearance between its outer surface and the inner wall of the cylinder to allow for all necessary expansion of the head due to the high temperatures to which it is directly subjected. The fit between the skirt and the inner wall of the cylinder may be a snug sliding fit and the area of the skirt which co-acts with the inner wall of the cylinder be such as to insure against slapping or rapping of the piston against the inner wall of the cylinder. In fact objectionable piston slap, incident to the operation of numerous types of pistons, for use in internal combustion motors, substantially is eliminated, by the use of a piston constructed in accordance with my invention. Likewise oil pumping is substantially eliminated and the passage of liquid hydrocarbons from the top of the piston to the crank case is practically eliminated, resulting in minimizing of undue and troublesome carbonization and undesirable smoking among other things.

Due to the fact that the skirt or sleeve 1 is maintained relatively cool under all normal conditions, the possibilities of scoring of the inner walls of the cylinder are practically eliminated.

The construction of a piston embodying my improvements, as hereinbefore described, may be readily carried out in permanent molds, which is not true of the construction illustrated in said Letters Patent No. 1,092,870, and I have had in mind the use of such permanent molds in the design of my said improvements.

The exterior walls of the skirt near the upper end thereof, where the connectors 3 join the skirt, may be relieved or recessed, as indicated at 1^d, to allow for greater expansion at these points than will occur at other points in the same circumference of the skirt.

In the modification of my invention, illustrated in Figs. 5 to 7, inclusive, the lower piston ring groove is formed by the walls of a recess in the peripheral flange 2^a of the piston head 2 and the upper end wall of the skirt 1. In this case the lower piston ring 5 may be used as and will operate as an oil wiper and will permit the oil to pass underneath it through the grooves 1^e in the upper end wall of the skirt 1 and back into the crank case, thus assisting in keeping the motor from smoking. Where the piston rings are mounted as illustrated in Figs. 1 and 2, the air gap between the upper end of the skirt and the adjacent wall of the peripheral flange of the piston head will serve to provide an escape for oil back to the crank

case from the cylinder walls and substantially eliminate undesirable smoking of the motor.

In the modified construction illustrated in Figs. 10 to 14, inclusive, all of the columns or connectors 3 are disposed out of alignment with the wrist pin bosses 1^a. When thus disposed the amount of heat transmitted through such connectors to the wrist pin bosses will be somewhat reduced over that of a piston having the construction illustrated in Figs. 1 to 4, inclusive, as none of such connectors will transmit heat directly to either of the wrist pin bosses, there being a section of skirt between the connection of the lower end of each such connector with the skirt and the connection of the adjacent wrist pin boss with the skirt. Furthermore, with this last referred to modification the relief spaces or recesses in the outer wall of the piston adjacent the points at which the connectors 3 join the skirt will be so disposed as not to reduce any of the principal wearing surfaces of the piston against the inner wall of the cylinder.

In addition, with all the connectors 3 disposed in the regions of the pin bosses, as disclosed in Figs. 10 to 14, inclusive, the piston is especially well adapted to run with a close fit of the guide section 1 in the cylinder. It will be observed, on reference to Figs. 10, 13 and 14, that said guide section has a circumferential zone or belt extending from its upper end down to and below the pin boss openings that is characterized by a short outer diameter in line with the bosses and a long outer diameter at right angles to said bosses, this being due to the above described relief of the piston adjacent the bosses and the connectors 3. Thus when this top zone of the guide heats up the resulting expansion can be accommodated by outward movement of the relieved part of the wall and danger of seizing, as a result of close engagement between the unrelieved part of said wall and the cylinder, is obviated. This action, of course, is made possible by the fact that the upper end of the guide section is not continuously joined to the head section but, being separated from the head by the air gap, is free to take form in a measure independent of the head. The bottom part of the guide section does not attain so high a temperature as said upper zone so that no special provision for the expansion of said lower part is required.

It will be noted that pistons embodying my improvements may be made relatively light in weight, which is of material advantage in assisting in reducing the weight of the reciprocating parts of the motor.

Pistons of my improved construction will be found to operate comparatively noiselessly, smoothly and efficiently within the cylinders of internal combustion motors and with greatly reduced skirt clearances over ordinary constructions of skirted pistons.

In making my improved piston, I prefer to employ the following process. The casting may be formed in any suitable mold as a cup-shaped article, as indicated in Fig. 8. While the invention is not limited to any particular method of casting it is to be observed that the improved construction is especially well adapted for casting in a permament mold, the form and arrangement of the connectors 3 relative to the inner piston walls and the absence of any obstruction that would prevent free access to said inner walls from the open end of the piston, obviating all difficulties incident to coring. The casting being made, its outer surface may be suitably machined or ground so as to have the general external form illustrated in Fig. 9, or in Figs. 10, 13 and 14, and thereafter the head 2, including end wall $2'$ and peripheral wall 2^a may be separated from the skirt 1 by inserting a cutting tool at 7, so as to form the air gap between the lower end wall of the peripheral flange 2^a of the head and the upper end wall of the skirt. This separation of the head from the skirt may be effected before externally surfacing the casting, if desired. Any well known type of cutting mechanism may be employed for the purpose. After the cut is made the exterior of the casting will have the general appearance illustrated in Fig. 9.

To those skilled in the art of making mechanism of the class described, many alterations in construction and widely differing embodiments of my application will suggest themselves without departing from the spirit and scope thereof. My disclosures and the description herein are purely illustrative and are not intended to be in any sense limiting.

What I claim is:

1. An integrally cast piston comprising a head section having end and peripheral walls, a guide section separated at its upper edge from the lower edge of the peripheral wall of said head section by an air gap and provided with diametrically opposite wrist pin bosses, and section connectors which spring from the inner surface of the peripheral wall of the head section across said air gap to the upper part of the guide section in the regions of said wrist pin bosses, there being no cored-out space between any of said connectors and the adjacent side walls of the head and guide sections.

2. An integrally cast piston comprising a head section having end and peripheral walls, a guide section separated at its upper edge from the lower end of the peripheral wall of said head section by an air gap and provided with diametrically opposite wrist pin bosses, and section connectors which spring from the inner surface of the periph-

eral wall of the head section across said air gap to the upper part of the guide section in the regions of said wrist pin bosses, the wall of said guide section being exteriorly relieved opposite said connectors.

3. A piston comprising a head section having end and peripheral walls, a guide section provided with diametrically opposite wrist pin bosses, and means connecting the head and guide sections in the regions of said bosses, the upper edge of the guide section and the lower edge of the head being separated by an air gap in the regions between said connecting means, and the guide section being exteriorly relieved in the regions of the bosses and connecting means.

4. An integrally cast piston comprising a head section having end and peripheral walls, a guide section provided with diametrically opposite wrist pin bosses, and means connecting the head and guide sections in the regions of said bosses, the upper edge of the guide section and the lower edge of the head being separated by an air gap in the regions between said connecting means and the guide section being exteriorly relieved in the regions of the bosses and connecting means.

5. A piston for an internal combustion engine comprising a guide section having a pair of diametrically opposed wrist pin bosses integrally formed therewith, a head having end and peripheral walls the lower edge of the latter being spaced from the upper edge of said guide section by a practically continuous non-conducting air gap, and connectors which extend from said peripheral wall downwardly to said guide section and are integrally formed with said peripheral wall and guide section, said guide section being exteriorly relieved in the regions of said connecting means.

6. An integral cast piston for an internal combustion engine comprising a guide section having a pair of diametrically opposed wrist pin bosses, a head section having end and peripheral walls, the lower edge of the latter being separated from the upper edge of said guide section by a relatively narrow air gap extending practically around the piston, and connectors which spring from said peripheral wall of said head and the upper end of said guide section and bridge said air gap, there being no cored-out space between any of said connectors and the adjacent side walls of the head and guide sections and said guide section being exteriorly relieved in the regions of said connecting means.

7. An integral cast piston for an internal combustion engine comprising a guide section having a pair of diametrically opposed wrist pin bosses, a head section having end and peripheral walls, the lower edge of the latter being separated from the upper edge of said guide section by a relatively narrow air gap extending practically around the piston, and connectors which spring from said peripheral wall of said head and the upper end of said guide section in the regions of said wrist pin bosses and bridge said air gap, said guide section being exteriorly relieved over continuous areas each embracing the region of one of said bosses and the adjacent connecting means.

8. A piston for an internal combustion motor, comprising a guide section having a pair of diametrically opposed wrist pin bosses integrally formed with the guide section, a head having end and peripheral walls, the lower edge of the latter being separated from the upper edge of the guide section by an air gap, and means disposed out of alignment with the axes of said wrist pin bosses and extending across said air gap and providing the sole means of connection between said head and guide section.

9. A piston for an internal combustion motor, comprising a guide section having a pair of diametrically opposed wrist pin bosses integrally formed with the guide section, a head having end and peripheral walls, the lower edge of the latter being separated from the upper edge of the guide section by an air gap, and connectors between the peripheral wall of said head and the guide section formed integral therewith and radially inset with respect to said peripheral wall and providing the sole means of connection between said head and guide section.

10. An integrally cast piston comprising a head section having end and peripheral walls, a guide section separated at its upper edge from the lower edge of the peripheral wall of said head section by an air gap and provided with diametrically opposed wrist pin bosses and section connectors between the head section and the guide section in the regions of said wrist pin bosses, said connectors being disposed radially inside the air gap and there being no cored-out space between any of said connectors and the adjacent side walls of the head and guide sections.

11. An integrally cast piston comprising a head section having an end wall and a peripheral wall formed with a plurality of ring grooves, a guide section provided with diametrically opposite wrist pin bosses, and means connecting the head and guide sections in the regions of said bosses, the upper edge of the guide section and the lower edge of the head being separated in the regions between said connecting means by air gaps disposed below the lower most of said ring grooves and the guide section being exteriorly relieved in the regions of the bosses and connecting means.

12. An integrally cast piston comprising

a head section having end and peripheral walls, a guide section non-compressible circumferentially and provided with diametrically opposite wrist pin bosses, and means connecting the head and guide sections in the regions of said bosses, the upper edge of the guide section and the lower edge of the head being separated by an air gap in the regions between said connecting means and the guide section being exteriorly relieved in the regions of the bosses and connecting means.

In testimony whereof I affix my signature, in the presence of two witnesses.

LOUIS P. MOOERS.

Witnesses:

STANLEY ZULINSKI,

JOHN M. WALTER.

BLANK PAGE

[fol. 1321] PLAINTIFFS' EXHIBITS

Stipulated Digest of Assignments of Patents in Suit

* * * * * * *

Jardine Patent No. 1,763,523 (Plaintiffs' Exhibit 3)

Plaintiffs' Exhibit 3-A

From Frank Jardine to The Aluminum Castings Co.
Interest: Entire
Consideration: One Dollar and Other
Date: March 9, 1920

Plaintiffs' Exhibit 3-B

From The Aluminum Castings Company to Aluminum Manufactures, Incorporated
Interest: Entire in Jardine application S. N. 364,997
Consideration: One Dollar and Other
Date: August 1, 1921

Plaintiffs' Exhibit 3-C

From Aluminum Manufactures, Inc. to Aluminum Company of America
Interest: Entire in Jardine application S. N. 364,997
Consideration: One Dollar and Other
Date: July 1, 1924

[fols. 1322-1324] Plaintiffs' Exhibit 3-D

From Aluminum Company of America to The Cleveland Trust Company, as Trustee
Interest: All assignor owns in Jardine application S. N. 450,898 filed March 9, 1921 (renewal of S. N. 364,997)
Consideration: Pursuant to agreement of April 26, 1924
Date: May 13, 1930

* * * * * * *

(Here follows 1 photolithograph, side folio 1325-1326)

564A

FILED
JAN 27 1934
At ..... O'clock ..... M.
E. J. WENZLER, Clerk
U. S. District Court N. D. O.

Plaintiff's Exhibit C. 30

CAUTION

Pl. 7

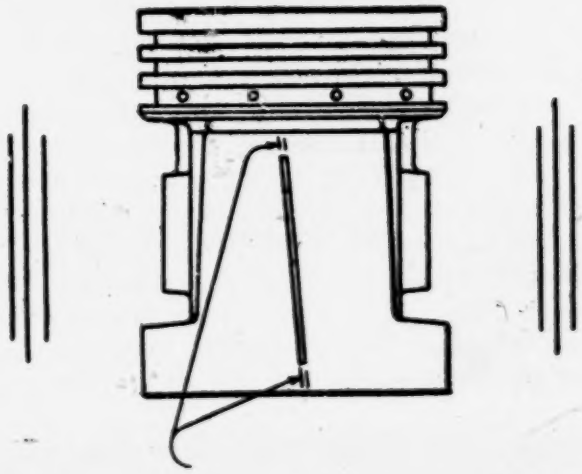

Complete (saw thru at arrows) after wrist pin, rings, and rod are assembled—just before installing.

This slot is left unfinished so as to reduce distortion hazards in transit.

Sterling Products Corporation

Saint Louis, U. S. A.

Printed in U. S. A.

PLAINTIFFS' EXHIBIT NO. 7.
Instruction Sheet to Purchasers of Exhibit No. 1.
(Filed January 27, 1934.)

1325-1326

BLANK PAGE

[fol. 1327] PLAINTIFFS' EXHIBIT No. 11

CIRCULAR LETTER OF STERLING PRODUCTS CORPORATION—Filed January 27, 1934

Sterling Products Corporation

2916 North Market St.

Saint Louis

Announcement

GENTLEMEN:

We are specializing in a *Duplicate* Model "A" Ford Piston, for the replacement trade—IDENTICAL to that used as original equipment to all Model "A"s.

The exceptions are (1) head is centered—to facilitate finishing; (2) perpendicular slot is not completed (this to be finished after pin, rings and rod are assembled)—to reduce distortion hazards in transit; and (3) wrist pin holes are left undersize—for accurate pin fitting.

Bulletin, enclosed, will illustrate our attractive sales schedule. You will *not* find these prices equalled. The response, from the trade, on our Ford Piston proposition, is indicative of its merit.

As we are already behind on our delivery schedule—would encourage placing your order immediately for future delivery.

Yours very truly, Sterling Products Corporation.

(Received Jun 13 1930 Evans & McCoy)

[fol. 1328] PLAINTIFFS' EXHIBIT No. 13

TABULATION AS TO SALES PRODUCED BY WHITNEY—Filed January 27, 1934

Summary of Royalties Paid by Licensees Under the Piston Patent Estate

Year 1924	$23,353.08
1925	57,753.92
1926	51,284.82
1927	58,240.29
1928	209,810.43
1929	207,861.12
1930	141,982.96
1931	93,219.67
1932 (three quarters)	60,470.80
	$903,977.09

Summary of Pistons Made and Sold for the Year 1925 as Reported by Licensees Under The Piston Patent Estate

Licensee	Total Production		Net Sales		Royalties Paid
Aluminum Co. of America	831,682		815,374		
	25,349		25,251		
	1,158,464		1,108,331		
	59,443		58,775		
	1,199,988		1,176,367		
	24,313		23,670		
	900,380		874,545		
	32,489	4,232,108	32,164	4,114,477	41,144.77
Kant-Skore Piston Co.	79,540		65,929		
	121,361		117,991		
	170,393		159,541		
	165,808	537,102	163,619	497,080	4,970.8
W. M. Levett Co., W. M. Levett Corporation and W. M. Levett	251,929		248,107		
	354,769		339,646		
	314,454		303,176		
	288,344	1,209,496	272,906	1,163,835	11,638.3
National Piston Company	0		0		
	0		0		
	0		0		
	0		0		
		5,978,706		5,775,392	57,753.9

[fol. 1329]

Summary of Pistons Made and Sold for the Year 1926 as Reported by Licensees Under the Piston Patent Estate

Licensee	Total Production		Net Sales		Royalties Paid
Aluminum Co. of America	1,361,988		1,351,133		
	21,844		21,715		
	913,469		900,879		
	63,806		62,813		
	777,690		772,643		
	1,709		1,675		
	553,930		550,216		
	3,312	3,697,248	3,299	3,664,373	36,643.73
The Kant-Skore Piston Co.	353,178		344,218		
	355,372		341,827		
	164,778		161,849		
	129,953	1,003,281	119,610	967,504	9,675.04
Walker M. Levett Co., W. M. Levett Corporation and W. M. Levett	205,761		202,685		
	51,684		49,964		
	29,223		25,601		
	96,129	382,797	93,813	372,063	3,720.63
The National Piston Company, Inc.	10,379		10,379		
	41,622		41,622		
	48,289		46,445		
	36,658	136,948	26,096	124,542	1,245.42
		5,220,274		5,128,482	51,284.82

[Vol. 1330]

Summary of Pistons Made and Sold for the Year 1927 as Reported by Licensees Under the Piston Patent Estate

Licensee	Total Production		Net Sales		Royalties Paid
The Aluminum Co. of America	953,859		947,692		
	308*		303*		
	1,133,980		1,112,035		
	1,681		1,681		
	974,468		953,190		
	750		747		
	792,434	3,856,866	770,474	3,785,516	37,855.16
The Kant-Skore Piston Company	186,683		179,089		
	144,695		141,836		
	68,474		66,397		
	69,168	469,020	64,484	451,806	4,518.06
Walker M. Levett Co., W. M. Levett Corporation and W. M. Levett	108,066		103,903		
	98,217		95,656		
	59,097		54,852		
	0	265,380	0	254,410	2,544.10
The National Piston Company, Inc.	8,326		5,435		
	0		80*		
	0		0		
	0	8,326	0	5,355	53.55
John Aluminum and Brass Corporation	172,268		169,152		
	1,188,278	1,360,546	1,157,790	1,326,942	13,269.42
		5,960,138		5,824,029	58,240.29

*Figures in red.

Summary of Pistons Made and Sold for the Year 1928 as Reported by Licensees Under the Piston Patent Estate

Licensee	Total Production		Net Sales		Royalties Paid
Aluminum Co. of America	2,243,764		2,218,170		
	1,500		1,500		
	2,711,058		2,661,563		
	2,170		2,170		
	2,431,813		2,409,107		
	1,654,463		1,629,699		
	9,044,768		8,922,209		89,222.09
The Kant-Skore Piston Company	217,279		212,905		
	350,383		338,833		
	242,988		236,348		
	152,782		141,890		
	963,432		929,976		9,299.76
John Aluminum and Brass Corporation	2,662,916		2,602,739		
	2,913,717		2,847,834		
	3,300,579		3,217,904		
	2,523,961		2,460,381		
	11,401,173		11,128,858		111,288.58
		21,409,373		20,981,043	209,810.43

[fol. 1331]

Summary of Pistons Made and Sold for the Year 1929 as Reported by Licensees Under the Piston Patent Estate

Licensee	Total Production	Net Sales	Royalties Paid
Aluminum Company of America	2,325,994	2,317,294	
	2,488,086	2,473,737	
	1,849,879	1,832,064	
	985,713	958,032	
	7,649,672	7,581,127	75,811.2
Aluminum Industries, Inc.	384,196	373,429	
	664,521	655,042	
	556,408	541,319	
	212,137	206,322	
	509,684	497,925	
	2,326,946	2,274,037	22,749.3
Bohn Aluminum and Brass Corporation	3,576,703	3,521,867	
	3,663,724	3,583,220	
	2,872,192	2,803,411	
	1,062,812*	1,022,450	
	11,175,431	10,930,948	109,309.4
	21,152,049	20,786,112	207,861.1

Summary of Pistons Made and Sold for the Year 1930 as Reported by Licensees Under the Piston Patent Estate

Licensee	Total Production	Net Sales	Royalties Paid
Aluminum Co. of America	1,348,244	1,341,775	
	1,572,819	1,565,050	
	603,817	598,212	
	1,109,188	1,104,496	46,095.3
	4,634,068	4,609,533	
Aluminum Industries, Inc.	685,199	662,014	
	986,784	970,420	
	642,541	632,654	
	469,174	458,422	
	2,783,698	2,723,510	27,235.1
Bohn Aluminum & Brass Corporation	2,764,209	2,731,263	
	2,475,617	2,444,823	
	1,094,161	1,063,468	
	644,565	625,699	
	6,978,552	6,865,253	68,652.5
	14,396,318	14,198,296	141,982.9

[fols. 1332-1336]

Summary of Pistons Made and Sold for the Year 1931 as Reported by Licensees Under the Piston Patent Estate

Licensee	Total Production	Net Sales	Royalties Paid
Aluminum Company of America	973,900	970,735	
	1,024,002	1,020,669	
	262,177	257,808	
	255,167	249,413	
	2,515,246	2,498,625	24,986.25
Aluminum Industries, Inc.	377,635	366,992	
	516,246	510,091	
	480,228	472,947	
	255,495	242,733	
	1,629,604	1,592,763	15,927.63
Bohn Aluminum & Brass Corp.	1,631,388	1,608,218	
	2,263,589	2,236,588	
	791,060	753,183	
	648,418	632,590	
	6,334,455	5,230,579	52,305.79
	9,479,305	9,321,967	93,219.67

Summary of Pistons Made and Sold for the First Three Quarters of the Year 1932 Piston Patent Estate

Licensee	Total Production		Net Sales		Royalties Paid
Aluminum Company of America	578,158		567,372		
	844,687		837,296		
	700,000	2,122,845	694,795	2,099,463	20,994.63
Aluminum Industries, Inc.	333,445		329,260		
	415,332		403,897		
	208,687	957,464	198,890	932,047	9,320.47
Bohn Aluminum & Brass Corporation	900,970		884,851		
	1,119,703		1,106,078		
	1,035,011	3,055,684	1,024,641	3,015,570	30,155.70
		6,135,993		6,047,080	$60,470.80

(Here follow 2 photolithographs, side folios 1337-1338—1339-1340)

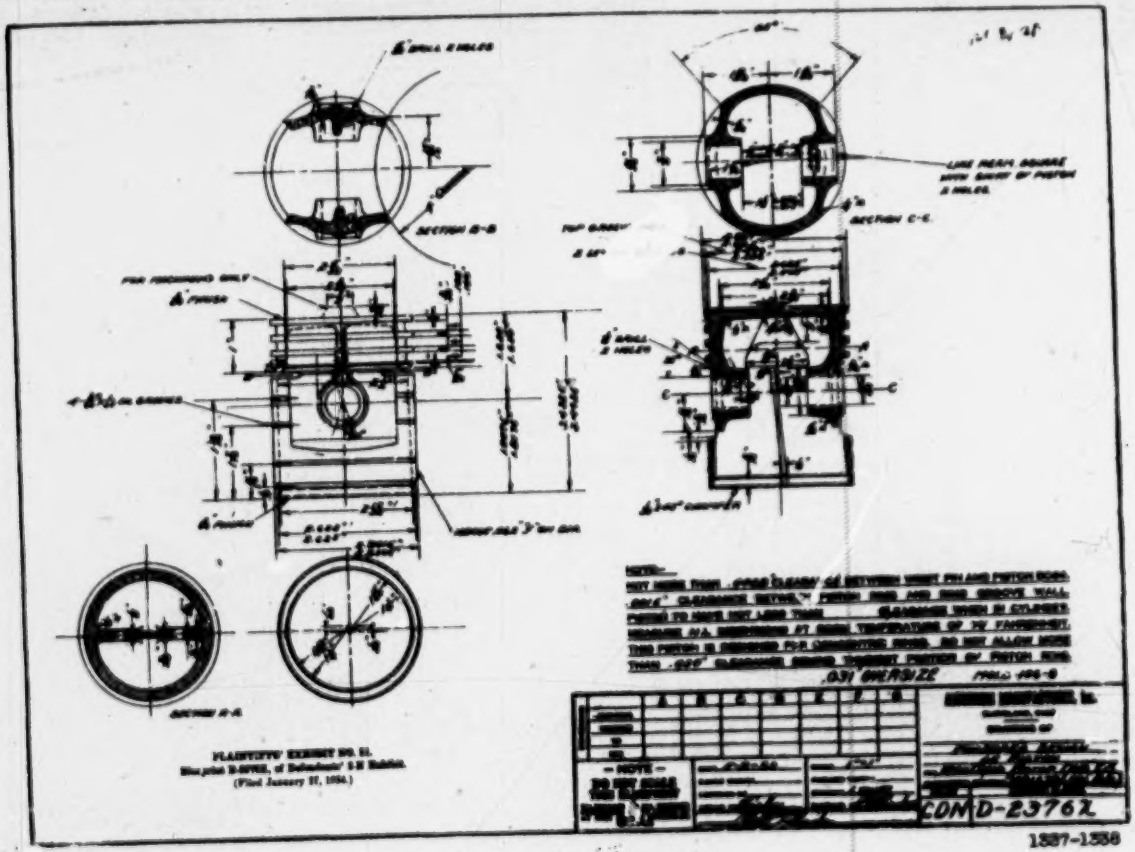

PLAINTIFFS' EXHIBIT NO. 11.
Blueprint B-[illegible], of Defendants' [illegible] Exhibit.
(Filed January 17, 1934.)

1337-1338

570A

BLANK PAGE

570B

BLANK PAGE

[fol. 1341] **PLAINTIFFS' EXHIBIT NO. 25**

Interlocutory Decree, Simmons Case

Filed January 27, 1934

IN THE UNITED STATES DISTRICT COURT, NORTHERN DISTRICT OF OHIO, EASTERN DIVISION

In Equity. No. 3510

THE CLEVELAND TRUST COMPANY, CHRYSLER CORPORATION, Plaintiffs,

vs.

THE SIMMONS MANUFACTURING CO., Defendant

INTERLOCUTORY DECREE

This cause coming on to be heard at this term of Court upon the pleadings and the petition of the Defendant, The Simmons Manufacturing Company, to be permitted to and the offer of said Defendant to consent to a decree admitting title to the patents in suit in the Plaintiff, admitting their validity and the infringement thereof by pistons like Exhibit No. B, filed with the answers to Plaintiff's interrogatories, and counsel having been heard upon these questions, it is therefore upon consideration thereof,

Ordered, Adjudged and Decreed as follows:

(1) That Letters Patent of the United States to Spillman & Mooers, No. 1,092,870, dated April 14, 1914, for Piston for Explosion Engines or Motors, is good and valid in law as to all of the claims thereof; that the inventors Edward O. Spillman and Louis P. Mooers named in said patent were the first, true, original and joint inventors of the inventions, improvements and combinations described in said claims, and that the Plaintiff, The Cleveland Trust Company, is the lawful owner of the entire right, title and interest in and to said inventions, and in and to the Letters Patent therefor as aforesaid:

That Letters Patent of the United States to Franquist, No. 1,153,902, dated September 21, 1915, for Piston, is good and valid in law as to all of the claims thereof; that the inventor, Gustave E. Franquist, named in said patent was

the first, true and original inventor of the inventions, improvements and combinations described in said claims, and [fol. 1342] that the Plaintiff, The Cleveland Trust Company, is the lawful owner of the entire right, title and interest in and to said inventions, and in and to the Letters Patent therefor as aforesaid;

That Letters Patent of the United States to Schmiedeknecht, No. 1,256,265, dated February 12, 1918, for Piston, is good and valid in law as to all of the claims thereof; that the inventor, Victor E. Schmiedeknecht, named in said patent was the first, true and original inventor of the inventions, improvements and combinations described in said claims, and that the Plaintiff, The Cleveland Trust Company, is the lawful owner of the entire right, title and interest in and to said inventions, and in and to the Letters Patent therefor as aforesaid;

That Letters Patent of the United States to Mooers, No. 1,402,309, dated January 3, 1922, for Piston for Internal Combustion Motors, is good and valid in law as to all of the claims thereof; that the inventor Louis P. Mooers, named in said patent was the first, true and original inventor of the inventions, improvements and combinations described in said claims, and that the Plaintiff, The Cleveland Trust Company, is the lawful owner of the entire right, title and interest in and to said inventions, and in and to the Letters Patent therefor as aforesaid;

That Letters Patent of the United States to Howdeshell, No. Re-16,273, dated February 23, 1926, for Piston for Engine Cylinders, is good and valid in law as to all of the claims thereof; that the inventor, Roland M. Howdeshell, named in said patent was the first, true and original inventor of the inventions, improvements and combinations described in said claims, and that the Plaintiff, The Cleveland Trust Company, is the lawful owner of the entire right, title and interest in and to said inventions, and in and to the Letters Patent therefor as aforesaid;

That Letters Patent of the United States to Maynard, No. 1,655,968, dated January 10, 1928, for Piston, is good and valid in law as to all of the claims thereof; that the inventor Howard E. Maynard, named in said patent was the first, true and original inventor of the inventions, improvements and combinations described in said claims, and that the Plaintiffs, The Cleveland Trust Company and Chrysler

Corporation, are the lawful owners of the entire right, title and interest in and to said inventions, and in and to the Letters Patent therefor as aforesaid;

That Letters Patent of the United States to Jardine, No. 1,763,523, dated June 10, 1930, for Piston is good and valid [fol. 1343] in law as to all of the claims thereof; that the inventor, Frank Jardine, named in said patent was the first, true and original inventor of the inventions, improvements and combinations described in said claims, and that the Plaintiff, The Cleveland Trust Company, is the lawful owner of the entire right, title and interest in and to said inventions, and in and to the Letters Patent therefor as aforesaid;

That Letters Patent of the United States to Gulick, No. 1,815,733, dated July 21, 1931, for Piston, is good and valid in law as to all of the claims thereof; that the inventor, Edward J. Gulick, named in said patent was the first, true and original inventor of the inventions, improvements and combinations described in said claims, and that the Plaintiff, The Cleveland Trust Company, is the lawful owner of the entire right, title and interest in and to said inventions, and in and to the Letters Patent therefor as aforesaid.

(2) That the Defendant, The Simmons Manufacturing Company, has infringed upon said Letters Patent to Spillman & Mooers, No. 1,092,870, Franquist, No. 1,153,902, Schmiedeknecht, No. 1,256,265, Mooers, No. 1,402,309, Howdeshell, No. Re: 16,273, Maynard, No. 1,655,968, Jardine, No. 1,763,523 and Gulick, No. 1,815,733, within the Northern District of Ohio, Eastern Division, and elsewhere in the United States, by the sale of pistons employing or embodying the inventions set forth in each of said patents, as illustrated by Exhibit B; and the Defendant, The Simmons Manufacturing Company, has contributed to the infringement of each of said patents within the Northern District of Ohio, Eastern Division, and elsewhere in the United States.

(3) That Plaintiff do recover from Defendant, The Simmons Manufacturing Company, all profits, gains and advantages which the Defendant has, or shall have, derived, received or made by reason of said infringement, and that Plaintiff do recover from said Defendant any and all dam-

ages which the Plaintiff has sustained, or shall sustain by reason of said infringement by said Defendant.

(4) That this cause be, and the same is hereby referred to William B. Woods, Esq., a Master, to ascertain the amount of such gains and profits and the amount of damages sustained by the said Plaintiff by reason of such infringement; that the Defendant file its account with said Master in accordance with the Rules of Equity of the Su- [fol. 1344] preme Court of the United States relevant thereto; that on such accounting the Plaintiff shall have the right to cause an examination of the officers, servants, agents and employees of said Defendant, orally or otherwise, and also to cause the production of the Defendant's books, vouchers, accounts, bills of lading, shop orders and all documents relating to the pistons sold by Defendant, and that said Defendant, through its representatives, attend for such purpose before the Master from time to time as the said Master shall direct, and that all testimony and exhibits offered and used in this cause on behalf of either party may be referred to and used in such accounting.

That Defendant was duly notified under Section 4900 of the Revised Statutes of the United States of its infringement of said patents prior to the sale of any of the alleged infringing pistons by the Defendant, and that the Defendant continued to infringe notwithstanding said notice.

(5) That an injunction be issued out of and under the seal of this Court, directed to the Defendant, The Simmons Manufacturing Company, its officers, servants, agents, employees, workmen and all their privies, and each and every one of them, enjoining and restraining them during the remainder of the respective terms of said Letters Patent, all but Spillman & Mooers, No. 1,092,870, from directly or indirectly constructing or causing to be constructed and/or using and/or selling or causing to be used or sold or advertising for sale, pistons employing or embodying any of the inventions set forth in any of said patents, or apparatus, article or device to be used, or capable only of use, in a combination infringing any of said patents, and from infringing and contributing to infringement upon or violating any of said Letters Patent in any way whatsoever.

(6) That Plaintiff recover from the Defendant the Plaintiff's full cost in this suit to date and on any matter of ac-

counting herein against this Defendant to be taxed and to have execution therefor.

Entered this 25th day of September, 1931.

Jones, United States District Judge.

We consent to the entry of the above decree.

E. L. Hyde, Counsel for Defendant, The Simmons Manufacturing Company, Wm. C. McCoy, Counsel for Plaintiff.

[fol. 1345] **PLAINTIFFS' EXHIBIT NO. 26**

Conveyance, Declaration of Trust and Agreement between L. P. Mooers and George B. Pitts and The Cleveland Trust Company Dated March 7, 1922

Filed January 27, 1934

This Conveyance, Declaration of Trust and Agreement, entered into at Cleveland, Ohio, as of the 7th day of March, 1922, by and between L. P. Mooers and George B. Pitts, of Cleveland, Ohio, First Parties, and The Cleveland Trust Company, a corporation of Ohio, Second Party.

Witnesseth, that

WHEREAS, the First Parties now own, control or hold the entire right, title and interest in, to and under certain Letters Patent of the United States for inventions or improvements relating and pertaining to and for use in or in connection with pistons for explosion engines or motors, a list of which marked "Inventions" is hereto attached and made part hereof; and

WHEREAS, said First Parties are desirous of assigning, transferring and conveying the "Property" embracing said "Inventions" hereinafter more fully described, in trust, for the uses and purposes hereinafter set forth, and are desirous of appointing and constituting the Second Party Trustee hereunder, with the respective powers, duties and discretions hereinafter set forth:

NOW, THEREFORE, in consideration of the premises and of the covenants and agreements of the parties hereto, respectively, said parties have agreed and do hereby agree as follows, that

A. For the purposes of this agreement, wherever hereinafter used, the terms:

(1) "Property" shall mean and include (a) Each and all of the Letters Patent; (b) each and all of the applications for Letters Patent; (c) each and all of the inventions and improvements; (d) each and all of the licenses, and (e) all property, rights, money and proceeds of any, and every nature whatsoever, which may be acquired, held, controlled, collected or received by said Trustee in connection with this trust and subject to the terms and provisions hereinafter set forth.

[fol. 1346] (2) "Grantors" shall mean and include the First Parties hereto.

B. For the purposes and objects expressed herein, and in order that the entire control, management and disposition of the "Property" may be vested in trust for the use and benefit of such persons or corporations as may from time to time be the beneficiaries hereunder, the Grantors hereby constitute and appoint the Second Party Trustee hereunder, with all the powers, duties and discretions as hereinafter set forth with reference to the "Property" and the management, control and disposition thereof.

C. Said First Parties, the Grantors, covenant and agree, that

(1) For the joint and several considerations hereinafter set forth, they will and hereby do sell, assign, transfer and set over to said The Cleveland Trust Company, Trustee, and its successors in trust, the entire right, title and interest owned, held or controlled by them in, to and under each and all of the inventions or improvements embraced by said exhibit "Inventions" hereto attached, and in, to and under each and all of the Letters Patent of the United States and all other countries which have been or may be granted therefor, subject, however, to a license heretofore granted under certain of said Letters Patent to Nordyke & Marmon Company, of Indianapolis, Indiana, as of the date of April 23, 1920, and which license is hereby assigned and conveyed to this Trustee; in trust, however, for the uses and purposes, and subject to the terms, provisions and conditions hereinafter stated.

(2) At the time of the execution of this instrument, said First Parties own, control or hold the entire right, title and interest in, to and under each and all of said inventions or improvements enumerated and specified in said exhibit "Inventions" and the Letters Patent of the United States which have been granted therefor, subject to said license to Nordyke & Marmon Company, and that such interests and rights have not been encumbered; that they are free to transfer the same and that they have not entered into or executed and will not enter into or execute any assignment or agreement in conflict herewith.

(3) They and their heirs and legal representatives, without further compensation, will promptly execute and deliver [fol. 1347] any further paper, assignments or instruments, and do all other acts which, in the opinion of counsel for said Trustee shall be necessary or convenient to secure to and vest in said Trustee the full and complete legal title to the "Property" aforesaid, or any of it.

D. Subject to the conditions and provisions hereinafter set forth, the Trustee shall be and it hereby is authorized and empowered as follows:

(1) To hold the title to the "Property," to determine upon and in its own name to institute and conduct suits, actions or proceedings at law or in equity relative to this trust, or in any way affecting the "Property," or any part of the same, including suits or proceedings to restrain or enjoin infringement of or to recover incomes or proceeds arising out of the "Property," and damages and profits of any and every nature whatsoever, including those arising from infringements of the Letters Patent, or any of them, embraced by this trust; to settle suits, actions or proceedings, at law or in equity, having to do with said "Property," or any of it, or with this trust, and to compromise or refer to arbitration any claims in favor of or against said trust; and likewise to defend actions or suits affecting said "Property" or this trust.

(2) To manage, develop and promote the "Property" and the interests of this trust, to endeavor to induce the use of said "Inventions or Improvements," and to endeavor to prevent the infringement of said "Letters Patent," or any of them.

(3) To grant, execute and deliver licenses relating and pertaining to said "Property," or any of it, without covenants of warranty, however, on the part of the Trustee, and to change or modify the terms, provisions and conditions thereof from time to time as it may deem to be for the best interest of the trust.

(4) To collect, receive and receipt for all license and royalty fees under said "Property," and all sums of money at any time coming due or belonging to said trust; and to hold, account for and disburse the same.

(5) To acquire and receive the title to and licenses under inventions or improvements, applications for Letters Patent and Letters Patent which, upon their acquisition, shall be included within the term "Property" as used herein.

(6) To execute and deliver such instruments as shall be necessary to convey or assign the "Property," or any [fol. 1348] part thereof, without covenants of warranty, however, on the part of the Trustee.

(7) To determine and fix the terms and considerations upon which sales or purchases of property may be made, and to determine and fix the terms and considerations upon which licenses may be granted and executed by the Trustee with respect to the "Property," or any of it, belonging to this trust.

(8) To employ counsel, solicitors, agents and experts, when and for such purposes and periods of time as it may deem to be for the best interests of this trust.

(9) To determine finally what shall be treated as capital, what as income, and what as costs or expenses of the trust, for any and all purposes connected with or affecting this trust.

(10) To make advances or borrow money upon such terms and conditions, from time to time, for the improvement, protection or preservation of the property, or for the acquisition of additional property, whenever such may seem to it desirable or proper. For the repayment of such advances, with interest, the Trustee shall have a lien upon the trust property and for sums so borrowed may issue its promissory notes as Trustee, and secure the re-

payment thereof by mortgaging or pledging any part or all of the trust property.

(11) To exercise such other powers incidental to carrying out this trust as it shall find necessary and proper, provided, however, that the same shall not be inconsistent with the nature of the trust herein and hereby created.

E. (1) The Trustee hereby accepts said trust and agrees that, subject to and in accordance with the conditions and provisions hereinbefore and hereinafter contained, it will do all things which shall be necessary and proper, in its judgment, to protect and develop the "Property," for the benefit of the beneficiaries of this trust, who shall be trust beneficiaries only, without partnership, associate or any other relationship amongst themselves or between them and the Trustee; and that it will perform the specific duties herein required to be performed by it in accordance with the intentions herein expressed.

(2) It shall be the policy of the Trustee in the conduct of the trust to endeavor to induce or require all who use the patented inventions or improvements belonging to this [fol. 1349] trust to recognize the Letters Patent relating thereto.

(3) The Trustee shall employ and keep competent representatives, for the purpose of dealing with all licenses embraced by this agreement, determining the amounts due thereon and collecting and receiving the royalties or income which shall be payable thereunder.

(4) The Trustee shall use its best endeavors regularly to collect all royalties and incomes which shall become due and payable under the licenses granted by it in connection with the "Property"; and shall take proper steps and proceedings and use its best endeavors to collect all sums which shall belong to this trust. And said Trustee shall keep all moneys in its hands as such Trustee, separate and apart from the assets of its Banking Department, but allowing interest thereon at the rate and subject to such rules as may from time to time be in force and effect in its Savings Department.

(5) The Trustee shall keep just and true books of account showing all collections and expenditures of any and

every nature whatsoever made by it, and of the "Property" and rights of any and every nature whatsoever, received or acquired by it under the terms of this agreement, said books to be open at all reasonable times for inspection by the beneficiaries hereunder, or their duly authorized representatives; and shall furnish quarterly statements therefrom to the beneficiaries, and each of them hereunder. The fiscal accounting period hereunder shall be from January 1 to December 31, inclusive, of each year during the continuance of this trust.

(6) Quarterly, on the fifteenth day of February, May, August and November of each year during the continuance of this trust, the Trustee shall distribute and pay over to the beneficiaries entitled hereunder pro rata, in accordance with their respective shares as registered on the books of the Trustee, the balance of all revenues, moneys, proceeds of sale or disposition, and license fees or royalties collected by it from said "Property," up to the first day of each said calendar month, respectively, after the deducting therefrom

(1) The reasonable expenses of management and development of the "Property," including all taxes and compensation to the Trustee, and the payment of loans and advances and interest thereon made by or to the Trustee in the interest of this trust;

[fol. 1350] (2) Such sums of money as may be required in the acquisition of inventions and improvements, applications for Letters Patent, and Letters Patent, as hereinafter provided; and

(3) Such fund or funds as may from time to time hereafter be set aside in reserve, as hereinafter provided.

Furthermore, out of the income of the trust, the Trustee may set aside an allowance for depreciation and/or depletion of the patents, patent rights and other properties embraced by the trust and which shall be subject to depreciation and/or depletion. The Trustee, in determining the amount of such an allowance, shall take into consideration the measure of the depreciation and/or depletion, if any, then allowable as a deduction from the income of the trust, in accordance with the income tax laws of the United States, but the Trustee shall not be bound to adopt such

measure as the appropriate measure of the depreciation for which it shall set aside an allowance. The Trustee in its absolute discretion, may either accumulate the fund resulting from the aforesaid allowances for depreciation and/or depletion throughout the life of the trust, or may employ it in connection with the Reserve Fund hereinafter provided for, or may from time to time distribute to the beneficiaries any part or all of the funds so accumulated, thereby reducing to such an extent the "Property." Any such distribution of allowances shall be made to the holders of the certificates of interest in this trust as they shall then appear on the records of the Trustee, and shall be made in proportion to the respective number of shares in said beneficial interest so appearing to be held by them. In any event, upon final distribution of this trust, as provided for in Article F (15) hereof, the entire amount of such accumulations then on hand and of said Reserve Fund, hereinafter provided for, then on hand, shall be distributed in the same manner as is provided for in the final distribution of other assets of the trust.

F. (1) The beneficial interest under this trust shall be represented by seven thousand (7,000) shares, evidenced by Trustee's Certificates of Interest, which said Certificates of Interest shall be in the form of the certificate hereto annexed and marked "Certificate of Interest," and shall be issued as follows:

Forthwith, after the execution of this agreement, the Trustee shall issue and deliver one (1) Certificate of Interest, in the form of the certificate hereto annexed and [fol. 1351] marked "Certificate of Interest," which shall be for three thousand (3,000) shares, and be issued and delivered to L. P. Mooers.

The remaining four thousand (4,000) shares or any part thereof may be issued, during the continuance of this agreement, by the Trustee, at such prices or for such property or property rights and upon such terms, conditions and provisions, including series denominations therefor, as said Trustee may deem to be for the best interests of the beneficiaries hereunder.

Such certificates and all like certificates issued by the Trustee hereunder, and the beneficial interest represented thereby, shall be transferable, in whole or in part, at all times, but subject to the terms and conditions of this agree-

ment, and subject to such regulations as to transfer as the Trustee may prescribe, with the right in the transferee to receive from the Trustee a Certificate or Certificates of Interest, for the number of shares transferred to it or him; and the registered holder of any Certificate of Interest may be treated by the Trustee as the absolute owner thereof, and of all the rights of the original transferer (to the extent of the number of shares transferred), in the undivided interest in the "Property" represented thereby.

The Trustee shall have power to adopt appropriate rules and regulations in regard to the transfer of Certificates of Interest, and for registering such transfers, and from time to time to change such rules and regulations as occasion may require.

(2) No debt or liability shall be incurred by the Trustee, except such as may be incidental to the management and development of said "Property," and the Trustee shall have no power to bind the beneficiaries hereunder, or any of them, personally; and in every written contract which the Trustee shall authorize, enter into or make, reference shall be made to this Declaration of Trust; and each person or corporation, contracting or dealing with the Trustee, shall look to the funds and "Property" of the trust for payment under such contract or for the payment of any debt, judgment or decree, or of any money that may otherwise become due and payable; and neither the Trustee, nor any beneficiary hereunder, shall be personally liable therefor.

(3) The Trustee may from time to time, as it shall deem expedient, select, retain, employ and discharge such representatives, agents and counsel and such experts as it may consider are best fitted to serve the trust. And the Trustee [fol. 1352] may thereupon act, through and on the advice of the person or persons so selected, retained and employed.

(4) The Trustee shall not be required to bring any suit or defend any suit with reference to the "Property" or to do any act or thing, under the terms of this instrument, which, in its judgment, may involve it in any liability unless and until indemnified to its satisfaction against any such liability and said Trustee shall be entitled to indemnity out of the "Property," as well as any funds held by it

hereunder, including the Reserve Fund provided for in Article F (7) hereof, for any liability, loss, cost, damage or expense, which it may suffer or sustain in performing any of the terms and conditions of this agreement.

(5) Should the Trustee at any time during the continuance of this trust determine that it is for the best interest of this trust to acquire and receive inventions or improvements, applications for Letters Patent, or Letters Patent, for the purpose of including the same under this trust, it shall proceed to acquire and receive such property upon such terms and considerations as it shall deem appropriate.

(6) Should the Trustee determine that it is for the best interests of the trust to sell or otherwise dispose of the "Property" or any of it at any time, it shall designate, in writing, to the beneficiaries, the terms and considerations for the same, which in its opinion are adequate and for the best interests of the trust, and shall proceed to consummate such sale or disposition in conformity therewith, and the proceeds thereof shall become a part of the "Property" hereunder.

(7) The Trustee, fro. the moneys in its hands, may set aside a Reserve Fund, sufficient, in its judgment, to defray from time to time the expense of developing, promoting and protecting the "Property" and the cost of any litigation and proceedings connected with or incidental thereto, and to indemnify the Trustee against personal liability or loss, growing out of any action taken by said Trustee hereunder, but such fund shall not at any time exceed the sum of Seven Thousand Dollars ($7,000.00), unless contingencies arise which, in the opinion of the Trustee, justify the reservation of a larger sum in the best interests of the trust, whereupon, at its discretion, the Trustee may increase said Reserve Fund to Twenty-five Thousand Dollars ($25,000.00), for such period of time as it may deem to be expedient. Such Fund shall, so far as practicable, be placed at interest, [fol. 1353] as provided for in Article E (4) hereof, and all income derived therefrom shall become a part of the "Property."

(8) The Trustee and any of its successors hereafter appointed may at any time resign the trust hereby created by giving not less than thirty (30) days' notice, in writing, to

each of the beneficiaries hereunder by mail, to their addresses, respectively, as appear upon the records of the Trustee. In case of a vacancy caused by the resignation of the Trustee, or in case of the disability of the Trustee for any reason to perform the duties hereunder, a successor or successors to the Trustee shall be chosen as follows: Within ten (10) days from the date of such resignation or notice of such determination of disability, the Trustee shall make application to a Judge of the United States District Court of the Northern District of Ohio for the appointment by him of a successor Trustee or Trustees, and such Judge shall be and is hereby authorized and empowered to name and appoint a successor Trustee or Trustees to act hereunder; provided that should no Federal Judge for such District make the appointment, or there be no Federal Judge in the District, the Trustee shall make application to a Judge of the Common Pleas Court of Cuyahoga County, Ohio, who shall be and hereby is authorized and empowered to make such appointment.

Upon such appointment being made in either manner above prescribed, the successor Trustee or Trustees so appointed shall, upon written acceptance of the trust, become immediately vested with all the rights, power and trusts, and shall assume all the duties of The Cleveland Trust Company as Trustee hereunder, with the same effect as if originally named as such Trustee; and said The Cleveland Trust Company, or the party then occupying the position of Trustee, shall, upon demand of such successor Trustee or Trustees, or any one of them, account to such successor, and immediately execute all such assignments, conveyances or other instruments as shall be necessary and proper fully to vest the successor Trustee or Trustees with all the right, title and interest in, to and under the "Property," including all sums of money which may then belong to said trust; and upon such accounting and conveyance and the delivery of such "Property," the Trustee, who has so resigned, or who has been removed, shall be from thenceforward relieved and discharged from responsibility hereunder.

[fol. 1354] (9) The Trustee may advise with counsel as to the interpretation of this instrument and as to any matter relating to the trust herein set forth, and shall be fully protected in any action or omission taken or suffered by it in good faith on the advice of such counsel, and it shall be

protected in acting upon any notice, resolution, vote, request, consent, certificate, affidavit, voucher, bond or other paper or document, believed by it to be genuine and to be passed or signed by the proper party. Should the Trustee, in the performance of any of its duties herein and without affecting in any manner the irrevocable nature of this trust, deem it advisable to secure the assent or approval of the Certificate holders hereunder, it may do so by requiring their consent, in writing, to any course or plan of action, or any act or fact done or to be done, and the decision of a majority in interest of the Certificate holders shall be final and binding on all of them, and complete protection and authority to the Trustee. Nothing herein contained, however, shall be deemed to require the Trustee to secure or be bound by the assent or approval of the Certificate holders, or any of them, to any such course or plan of action, or to any act or fact done or to be done.

(10) Should any suit or suits be brought against the Trustee by reason of or because of anything done by it under this agreement and in pursuance thereof, and not resulting from its own bad faith or willful misconduct, or that of its agents, servants or representatives, in connection with or growing out of the terms and provisions hereof, the Trustee is authorized to defend such suits, and for that purpose to employ funds of this trust sufficient therefor, and to fully indemnify it in connection therewith.

(11) The Trustee shall not be liable hereunder for any loss arising out of the execution of this trust so long as it shall act in good faith; and said Trustee shall be liable hereunder only for the bad faith or willful misconduct of itself or its own agents, servants or representatives. In no event shall it be liable for any act or default of any counsel, solicitor, agent or expert, selected, retained or employed pursuant to the provisions of Article D (8), F (3) and F (9) hereof, provided reasonable care shall have been exercised by it in their selection. The Trustee shall not be required to give bond to secure the faithful performance of this trust by it, but in case of the appointment of a successor Trustee or Trustees, not a trust company, the said appointing Judge [fol. 1355] may, in his discretion, require such security for the performance of the duties of such successor Trustee or Trustees as in his judgment is just and proper.

(12) The Trustee shall receive reasonable compensation from time to time all of its services performed under this agreement.

(13) The death of a beneficiary holding a Certificate of Interest hereunder shall not operate to determine or in any manner affect this trust, but his Certificate of Interest shall pass to his executor, administrator, heirs, or legal representatives, and vest in them the ownership of such Certificate or Certificates of Interest, together with the interest in this trust represented thereby, in the same manner as it is held by the beneficiary.

(14) Whenever the Trustee is required under this agreement to communicate with or give notice to the beneficiaries hereunder, it may do so by written communication or notice mailed contemporaneously to each of the beneficiaries entitled to receive the same, addressed to the last known addresses, respectively, of such beneficiaries, as shown by the records of the Trustee.

(15) This trust shall continue until the expiration of all the Letters Patent which may hereafter become a part of the "Property" of said trust, or until all of the "Property" has been sold or disposed of, as hereinbefore provided, and until the Trustee has fully accounted for, distributed and paid over all moneys and "Property" received, or in any manner held by it hereunder.

(16) In the interpretation and construction of this instrument, the laws of the State of Ohio shall govern.

In Witness Whereof, said L. P. Mooers and George B. Pitts have executed and delivered this instrument, and, as evidencing its acceptance of the trusts and confidences herein imposed upon it, said The Cleveland Trust Company has caused this instrument to be executed and its corporate seal to be affixed hereto by executive officers, thereunto duly authorized, the execution and delivery being at Cleveland, Ohio.

L. P. Mooers, George B. Pitts. The Cleveland Trust Company, R. A. Malm, Vice President; A. J. Perfler, Assistant Trust Officer.

[fol. 1356] "Inventions"

Patentee	Number	Date
Spillman & Mooers	1092,870	April 14, 1914
H. C. Marmon	1293,846	Feb. 11, 1919
L. P. Mooers	1347,819	July 27, 1920
L. P. Mooers	1402,308	Jan. 3, 1922
L. P. Mooers	1402,309	Jan. 3, 1922

and the undivided one-half of any right, title and interest now owned or held by said Louis P. Mooers in Letters Patent of countries foreign to the United States corresponding to said Letters Patent of the United States No. 1092,870.

This list forms a part of the Conveyance, Declaration of Trust and Agreement entered into as of the 7th day of March, 1922, between Louis P. Mooers and George B. Pitts and The Cleveland Trust Company.

Certificate of Interest

No. —. — Shares

This is to Certify, that —— ——, Address ——, ——, is owner of — shares of undivided interest in the net profits and avails, when the same may be distributable, from certain "Property" comprising certain Inventions or Improvements, Applications for Letters Patent which have been or may be filed therefor and Letters Patent which may be granted thereon, and rights thereunder, more particularly described in a certain Conveyance, Declaration of Trust and Agreement entered into as of the 7th day of March, 1922, by and between L. P. Mooers and George B. Pitts, therein referred to as "Grantors," and The Cleveland Trust Company therein referred to as "Trustee," a copy of which is on file at the principal office of said The Cleveland Trust Company, in the City of Cleveland, Ohio, and open to the inspection of any holder of this Certificate, and that the legal title to said property is held by said The Cleveland Trust Company for the use and benefit of the various registered owners of interests therein, subject to and in accordance with the provisions of the aforementioned Conveyance, Declaration of Trust and Agreement so on file, reference to which is hereby made for a description of the nature and extent of the "Property," the rights and privileges of the holders of said Certificates of Interest,

and the terms and conditions upon which said Certificates [fols. 1357-1362] are issued. The holder of this certificate, by acceptance hereof expressly ratifies all of the terms and conditions of said Conveyance, Declaration of Trust and Agreement. The Cleveland Trust Company assumes no responsibility as to the validity of the title to the "Property" purported to be conveyed to it in trust, pursuant to the aforementioned Conveyance, Declaration of Trust and Agreement. The registered holder of this Certificate may be treated as the actual owner of this Certificate and the interest represented thereby for all purposes whatsoever.

This Certificate and the interest evidenced thereby may be transfered upon surrender thereof to the Trustee, duly endorsed, and subject to such rules and regulations governing transfers as the Trustee may establish.

The Cleveland Trust Company, by —— ——, Vice President. —— ——, Assistant Trust Officer.

Cleveland, Ohio, —— —, 19—.

(Here follows 1 photolithograph, side folio 1363-1364)

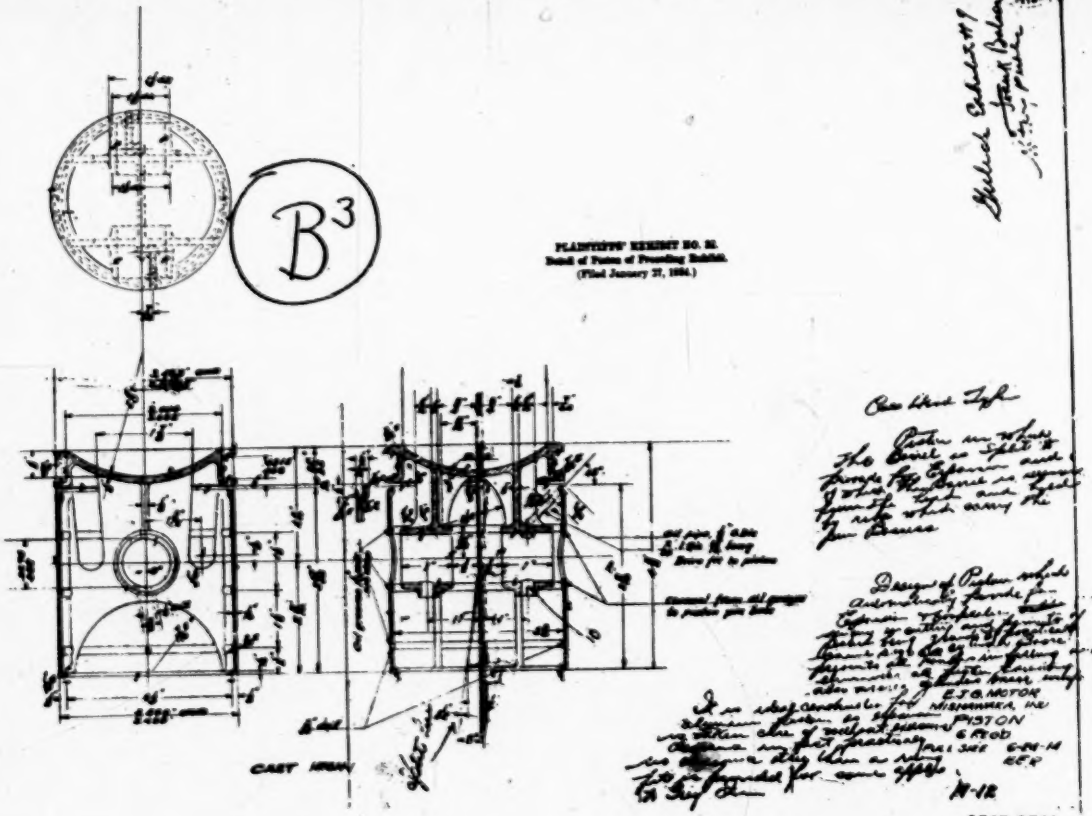

PLAINTIFFS' EXHIBIT NO. 31.
Detail of Pattern of Preceding Exhibit.
(Filed January 27, 1894.)

1363-1364

5884

BLANK PAGE

[fols. 1365-1378] **PLAINTIFFS' EXHIBIT NO. 38a.**

Supplemental Contract between The Cleveland Trust Company and Aluminum Company of America dated April 26, 1924

[Also offered as Defendants' Exhibit 4-T]

(Filed January 27, 1934)

This Agreement made and entered into this 26th day of April, 1924, by and between The Cleveland Trust Company, of Cleveland. Ohio, hereinafter sometimes called the licensor, and Aluminum Company of America, a Pennsylvania corporation of Pittsburgh, Pa., hereinafter sometimes called the licensee.

Witnesseth:

Whereas, the parties hereto have of even date entered into a contract hereinafter sometimes called the license agreement, a copy of which is attached hereto and marked Exhibit "D," and to which this contract is a supplement.

Now, Therefore, in consideration of the premises and of the covenants and agreements of the parties hereto made herein and in the license agreement, a copy of which is attached hereto and marked Exhibit "D," said parties have covenanted and agreed, and do hereby covenant and agree with each other further as follows:

1. In case the royalty per piston payable by any sub-licensee to the licensee, under the license agreement, is established at less than one cent ($.01) per piston by Board of Arbitration or others acting beyond the control of the licensee, the licensor shall accept the royalty so set at less than one cent ($.01) per piston as a royalty in full to be paid by the licensee hereunder for all pistons made and/or sold by such sub-licensee.

2. The licensee shall make vigilant effort to collect all royalties accruing from the sub-licensees under their sub-licenses, respectively. If the licensee is unable, after the exercise of due diligence, to collect royalties due from any sub-licensee, the licensee will be relieved from paying to the licensor the licensor's proportion of such uncollectable

royalties, and if the licensee has advanced to the licensor any royalties which prove to be uncollectable, the licensor will refund to or credit the licensee with the amount of such uncollectable portion so advanced. After the licensee has notified the licensor that any royalties are uncollectable, the [fols. 1379-1380] licensee will, upon demand in writing from the licensor, assign the licensor's proportion of such uncollectable account to the licensor.

3. In case the license agreement is cancelled for any reason whatsoever other than because of failure of the licensee to carry out its obligations or any of them to the licensor thereunder, the licensor agrees to reassign to the licensee all patents, patent applications or other patent rights which have been assigned by the licensee to the licensor under said license agreement (Exhibit "D" attached hereto), subject, however, to any and all licenses and sub-licenses which have been granted either by the licensor or the licensee or which the licensor is under contract to grant with respect to such patents, patent applications or other patent rights to (1) Walker M. Levett Company and W. M. Levett Corporation of New York; (2) The National Piston Company, Incorporated, of New York and (3) The Kant-Skore Piston Company, of Cincinnati, Ohio, copies of which contracts are hereto attached and marked Exhibits E, F and G, respectively.

In Witness Whereof the parties hereto have caused this instrument to be executed in duplicate by their respective officers hereunto duly authorized as of this 26th day of April, A. D. 1924.

The Cleveland Trust Company, By A. R. Horr, Vice President.

Attest: A. J. Perfler, Ass't. Tr. Officer.

Aluminum Company of America, By W. P. King, Vice President.

Attest: G. R. Gibbons, Secretary.

[fol. 1381] **PLAINTIFFS' EXHIBIT NO. 38b**

License Agreement between The Cleveland Trust Company and Aluminum Company of America

[Also offered as Defendants' Exhibit 4-S]

(Filed January 27, 1934)

License Agreement

This license agreement made and entered into by and between The Cleveland Trust Company, of Cleveland Ohio, hereinafter called sometimes the licensor, and Aluminum Company of America, a Pennsylvania corporation, hereinafter sometimes called the licensee, witnesseth:—

Whereas, the Licensor owns the entire right, title and interest in and to the following Letters Patent and applications for Letters Patent in the United States—

Number	Patentee	Date
1,092,870	Spillman & Mooers	April 14, 1914
1,279,184	J. G. Vincent	Sept. 17, 1918
1,293,846	H. C. Marmon	Feb. 11, 1919
1,327,147	Harold D. Church	Jan. 6, 1920
1,347,819	L. P. Mooers	July 27, 1920
1,402,308	L. P. Mooers	Jan. 3, 1922
1,402,309	L. P. Mooers	Jan. 3, 1922
Ser. No. 204,661	E. J. Gulick, Filed	Nov. 30, 1917, and

has arranged to acquire the entire right, title and interest in and to Letters Patent 1,153,902 dated September 21, 1915, to Gustave E. Franquist and,

Whereas, the licensor may acquire other United States patents, patent applications and patent rights relating to pistons, and/or the processes and/or the machines for making the same, during the life of this agreement; and

Whereas, the said licensee is desirous of acquiring a license to make, use and sell the inventions included in the said patents and applications acquired and to be acquired by the licensor for the full term for which said patents are or shall be granted.

Now, Therefore, in consideration of the premises and of the covenants and agreements of the parties hereto, respectively as hereinafter set forth, said parties have covenanted

and agreed, and do hereby covenant and agree with each other as follows:

[fol. 1382]

I

The Licensor grants the licensee the exclusive right to make, use and sell and the exclusive right to grant to others the right to make, use and sell, the inventions and devices embodying the inventions covered by the patents and applications above named or to be covered by any continuations and divisions, renewals or reissues of the same, for the full term of each of said patents, with the exception that the licensor reserves to itself the right to make, use and sell and the right to grant to others the right to make, use and sell pistons made entirely of cast iron or steel, and it is specifically agreed that the licensor neither grants nor agrees to grant to the licensee in this agreement the exclusive right to make use or sell pistons made entirely of cast iron or steel, it being understood that the licensee has hereunder a non-exclusive license to make, use and sell, and the right to grant to others the right to make, use and sell cast iron or steel pistons embodying the inventions covered by the patents and applications above named, or to be covered by any continuations and divisions, renewals or reissues of the same, for the full term of each said patents. This license and agreement will be automatically extended to cover any other and further patents or applications or other rights under patents which the licensor may acquire relating to pistons and/or processes and/or machines for making the same, unless excluded therefrom by the licensee as hereinafter provided, and the licensor agrees to execute any further instruments and perform any further acts, if any are required, to consummate the granting of licenses to the licensee or parties indicated by the licensee under this agreement. This license s subject to a license granted by The Cleveland Trust Company to Nordyke & Marmon Company, April 23, 1920, a copy of which is attached hereto marked Exhibit A.

II

The Licensor releases and discharges the Licensee, all of its controlled and subsidiary companies, and Aluminum Manufacturers, Inc., and The Aluminum Castings Company, all sub-licensees under this agreement and all vendees and/or users of pistons, the castings for which were heretofore

acquired from the Licensee or either of the said companies, or said sub-licensees, from any and all claims whatsoever for damages or profits by reason of any alleged past in-
[fol. 1383] fringement of any of the patents aforesaid now owned by the Licensor and arising out of the manufacture, use and sale of such pistons; and from any claim or claims for past damages or profits which shall be acquired by the Licensor in the future, during the continuance of this agreement, and theretofore arising out of the manufacture, use and sale of such pistons; and agrees not to institute or to aid or abet the institution of any suit against the Licensee or any of its controlled and subsidiary companies, or Aluminum Manufactures, Inc., or The Aluminum Castings Company, or sub-licensees, or the vendees or users of pistons, the castings for which were heretofore acquired from the Licensee or either of the said companies, or said sub-licensees, for any alleged past infringement of any patents relating to the subjects covered by the patents or applications named herein or for damages and profits because of alleged past infringement thereof and heretofore arising out of the manufacture, use and sale of such pistons.

III

1. (a) The Licensor shall institute and prosecute to a conclusion with due diligence suit or suits against any or all infringers of the patents included within the terms of this agreement necessary reasonably to protect the interests of the licensee acquired hereunder, provided that the licensor be indemnified to its satisfaction by the licensee for any costs or expenses which the licensor may suffer or sustain in connection with or growing out of any such suit.

(b) The licensor shall defend any suit or suits, so far as such defence shall be necessary reasonably to protect the interests of the licensee acquired hereunder, brought because of the alleged infringement of any letters patent covering the design of pistons made, sold or used under this agreement and for which royalties are paid under this agreement, provided that the licensor be indemnified to its satisfaction by the licensee for any costs or expenses which the licensor may suffer or sustain in connection with or growing out of any such defense.

2. Should the licensor bring and prosecute or defend as above provided such infringement suit or suits at its own expense, all profits or damages recovered in said suit or suits shall be the absolute property of the licensor.

[fol. 1384] 3. In the event of the failure of the licensor promptly to institute and vigorously prosecute or to defend such suit or suits as may be necessary reasonably to protect the interests of the licensee hereunder, then and in that event, the licensee having reasonably indemnified the licensor, may in the name of the licensor or the names of the licensor and licensee jointly institute or adopt and diligently prosecute or defend at the licensee's expense such suit or suits as may be required reasonably to protect its interests. The licensor at any time shall have the right to join in the prosecution or defense of such suit or suits with its own counsel and at its own expense.

4. Should the licensee bring or prosecute or defend as above provided any such infringement suit or suits or should the licensee furnish indemnification to the licensor in connection with suits brought or prosecuted or defended by the licensor and pay any sum on account of such indemnification, it shall have the right to apply all royalties payable by it on the reasonable costs and expenses of such suit or suits, including attorney's fees, or on said sum paid on account of indemnification and shall apply the sum, if any, recovered in any such suit, first, to the reimbursement of it for said reasonable expenses and costs, including attorney's fees, and not theretofore reimbursed to it out of royalties or sums paid on account of indemnification, and second, to the payment to the licensor of all sums theretofore deducted by the licensee from royalties and applied to the said reasonable costs and expenses, including attorney's fees, of such suit or payments of indemnification and the balance shall be the absolute property of the licensee.

IV

The Licensee agrees that it will within the months of January, April, July and October of each year from and after the execution hereof, furnish to the licensor, its successors or assigns in interest, a written statement under oath which shall show:

(a) the number of pistons made by or for it, imported by it and sold or otherwise disposed of by it during the pre-

ceding three calendar months which contain or which to the licensee's knowledge are to be modified or fabricated by the licensee's vendees to contain and embody any invention covered by any of the claims of any of the letters patent and application recited herein, or in the future acquired [fol. 1385] by the licensor and included herein. This report shall be made whether the licensee makes or sells any pistons during the preceding royalty period, or not, and

(b) the number of such pistons sold by the licensee and for which the vendee has been subsequently credited.

The first report shall include the pistons contemplated in this paragraph between January 1, 1924 and April 1, 1924.

V

The Licensee will pay the licensor royalty of one cent ($.01) upon each piston sold* or otherwise disposed of by it during the life of this agreement embodying in its construction any invention covered by one or more of the claims of the letters patent and application named herein or in the future acquired by the licensor and added hereto, and upon each piston made and sold by the licensee with the intention or the knowledge of the licensee that it shall be modified or fabricated by the licensee's vendee in such a way as to embody in its construction any invention covered by one or more of the claims in the letters patent or applications covered hereby.

It is understood that no royalties will be payable or collectible upon the licensed pistons which have been sold and for which the vendee thereof has been subsequently credited, and that if any royalties have been paid upon the licensed pistons which are sold, and for which the vendee has been subsequently credited, the licensee shall have credit therefor upon the next due payment.

VI

Within thirty (30) days after it shall have furnished, in January, April, July and October of each year, state-

* Sold in this contract means and includes only licensed pistons which are both contracted for and delivered, during the life of this agreement.

ments specified in the paragraph herein numbered (IV), the licensee shall and will pay to the licensor, its successors or the assigns of its interest in said letters patent, the royalties upon the pistons covered by said reports, at the rate prescribed.

[fol. 1386]

VII

The licensee agrees that it will keep accurate books of account, giving full particulars of the licensee's business in the inventions covered by this agreement and will in the event of controversy admit the licensor or its duly accredited agent at all reasonable times to inspect the same.

VIII

In the event that the combination set forth in any of the claims of the application for letters patent and of the letters patent to be granted thereon above recited and the letters patent above recited or acquired in the future and added hereto is held by a court of final jurisdiction or by an inferior court from whose decree no appeal is taken or the appeal is denied or dismissed, to be an infringement of any other patent in any patent suit brought in the United States against the licensor, the licensee, any other of the licensor's Licensees, any sub-licensees or any of its or their vendees, the licensee shall have, and is hereby given, the right and option to exclude from this license any such claim or claims or the letters patent or application for letters patent containing such claim or claims, as the case may be, and to have the royalty payable hereunder reduced proportionately if any, to the reduction, caused by such judicial holdings in the value of the patents and applications comprehended by this agreement, such proportion to be determined by arbitration as hereinafter in paragraph (XX) hereof provided, or to terminate this agreement altogether by giving to the licensor notice in writing of its election so to do within six (6) months from the rendition of the judicial holding of the court of final jurisdiction or after the expiration of the time for appeal or after the appeal has been denied or dismissed.

IX

The licensor authorizes and empowers the licensee to grant sub-licenses to manufacture, make, use and/or sell

within the United States pistons which contain and embody any inventions covered by any of the claims of any of the letters patent and applications for letters patent comprehended herein; provided that each and every such sub-license so granted shall expressly refer to this license, shall be of no greater scope than this license and shall terminate therewith; and provided further that all royalties [fol. 1387] payable by the sub-licensee shall be payable directly to the Aluminum Company of America or its order and the proportion thereof due to the licensor, namely, one cent ($.01) per piston, shall be payable forthwith to the licensor by the licensee hereunder.

X

This agreement and license shall be transferable to the successors or assigns of either of the parties hereto, but in that event the successors or assigns shall be bound by the provisions of this agreement and obligated to conform thereto.

XI

The licensee will not during the life of this agreement contest, or aid others in contesting the validity of any of the letters patent included within this agreement or afterwards acquired by the licensor and included in this agreement.

XII

The licensee can have and hereby is given the right and option to exclude from this license any letters patent or application for letters patent or other patent rights which the licensor may acquire after the execution of this license provided the licensee gives the licensor notice in writing of such exclusion within ninety (90) days after notice in writing to the licensee by the licensor of the acquisition of any letters patent or applications or other patent rights, not recited in this agreement.

XIII

The licensee shall pay royalties only upon pistons both contracted for and delivered during the term of this license —pistons contracted for before or delivered after the term of the contract are free of royalties.

XIV

If either of the parties hereto neglects or refuses to keep any of its covenants herein, then the other party hereto may serve on the derelict party by registered mail a notice in writing of such default and if the derelict party shall continue such default for thirty (30) days after the serving of such notice, then the aggrieved party may at its option cancel this license by a notice in writing of such cancellation and termination, provided, however, [fol. 1388] that the foregoing remedy shall not exclude any other remedy which the aggrieved party may have at law or in equity. The waiver of any breach by either party shall not be interpreted as constituting a waiver of any further breach or breaches.

XV

The licensor hereby grants to the licensee the exclusive right to make, use and sell the inventions covered by any foreign patents or applications for foreign patents, which the licensor now owns or controls which relate to pistons with the exception that the licensor reserves to itself the right under such foreign patents to make, use and sell and the right to grant to others the right to make, use and sell pistons made entirely of cast iron or steel. The licensor agrees to release the licensee, its subsidiary and controlled companies, the Aluminum Manufactures, Inc., The Aluminum Castings Company, their vendees, and all users of their pistons, from any claim or claims for alleged infringement of foreign patents, which the licensor now has or in the future may acquire against any of them. It is specifically agreed that the licensor neither grants nor agrees to grant to the licensee in this agreement the exclusive right to make, use or sell pistons made entirely of cast iron or steel under such foreign patents. It being understood that the licensee has a non-exclusive license under, and the right to license others under such foreign patents to make, use and sell pistons embodying inventions covered by any foreign patents which the licensee now owns or controls when such pistons are made entirely of cast iron or steel. The Licensor agrees, upon demand of the licensee, to execute all instruments and perform all acts necessary to complete the licenses under this paragraph. This license and agreement will be automati-

cally extended to cover any other and further foreign patents or applications for foreign patents or other rights under foreign patents which the licensor may acquire relating to pistons and/or processes and/or machines for making the same unless excluded therefrom by the licensee as hereinafter provided, and the licensor agrees to execute any further instruments and perform any further acts, if any are required, to consummate the granting of licenses to the licensee or parties indicated by the licensee under this agreement.

[fol. 1389]

XVI

Should the inventions, for the use of which the Licensee pays royalty under this agreement, be made, sold or used generally by others, in the aluminum piston or automobile trade, not licensed under the patents included in this contract, forthwith upon the finding by arbitration as hereinafter provided that such a condition exists, the Licensee may, at its option, (a) terminate this contract on ninety (90) days notice in writing to the Licensor of its intention so to do, or (b) surrender its exclusive license granted by this contract and retain a non-exclusive right and license to continue the use of the patented inventions without the payment of any royalty therefor until such infringement ceases.

XVII

The licensee shall have the following privileges and rights:

(a) At any time within two (2) years after the date of execution of this agreement, upon ninety (90) days' notice in writing to the Licensor of its intention so to do, to cancel this agreement; and

(b) To surrender this license at the end of two (2), four (4), six (6), eight (8), ten (10) years or any other period consisting of an even number of years after the date of execution hereof by giving to the licensor notice in writing of its desire and intention so to do at least ninety (90) days prior to the date the license is to be terminated; but any such termination of this license as in this article specified shall not release the licensee or the licensor from any obligations theretofore accruing to the opposite party.

XVIII

The licensee shall use reasonable diligence in manufacturing and/or marketing pistons embodying inventions licensed hereunder, and, in the event that, during the continuance of this agreement, it should not do so, the licensor shall have the following rights, options and privileges exercisable by it forthwith upon the finding by arbitration as hereinafter provided that the licensee has not used and is not using such diligence;

[fol. 1390] (a) To cancel or terminate this agreement by giving six (6) months' notice in writing to the said licensee of its desire and intentions so to do; whereupon at the expiration of said six (6) months from the date of said notice this agreement shall be terminated.

(b) To grant an additional license or licensee under the inventions or improvements, applications for letters patent and letters patents, or any of them, then embraced by and included within the terms of this license.

XIX

Should the licensee, taking advantage of its privilege under any of the provisions of this contract, elect to terminate this contract and stand out from under the same, the licensee shall not be estopped to deny the validity of any of the patents covered or comprehended by this contract and shall not be deprived of any of the defenses or the rights of a defendant in an ordinary patent infringement suit, but, on the contrary, shall stand in the position of one who had never entered into this contract.

XX

In the event either party hereto calls for an arbitration as provided for in this contract, each party shall select an arbitrator and the two arbitrators shall select a third arbitrator. In the event that the two arbitrators fail to select a third or in the event either party fails to select its arbitrator, it is agreed that the third and/or second arbitrator may be selected by the district judge of the United States District Court, Northern District of Ohio, Eastern Division, who has then been longest in said office. The three arbitrators thus selected shall constitute the Board of Arbitration and the parties hereto shall submit

their contentions to this Board of Arbitrators at a time and in a manner determined by the arbitrators. The decision of any two arbitrators shall be final and binding on the parties hereto. Each party shall bear the expense of its arbitrator and both shall bear the expense of the third arbitrator share and share alike.

[fol. 1391]

XXI

The licensor agrees that should it at any time during the life of this agreement grant licenses under the patents, now included or in the future included in this agreement, or under the substantial and material patents now included or to be included in this agreement, at lower rates than one cent ($.01) per piston as provided for herein, or otherwise upon more favorable terms than are provided for herein, then this agreement shall, on the request of the licensee, be modified to make its terms as favorable as these upon which any subsequent license may be granted.

XXII

The licensee agrees to assign, or cause to be assigned, to the licensor all United States patents and applications for United States patents which it now owns or in the future during the life of this contract acquires or controls relating to pistons per se.*

XXIII

This agreement, in the construction of which the laws of the State of Ohio shall govern, is made by the Licensor under title conveyed by or acquired under and subject to the terms, provisions and conditions of a certain Conveyance, Declaration of Trust and Agreement entered into as of the 7th day of March, 1922, by and between Louis P. Mooers and George B. Pitts and The Cleveland Trust Company, Trustee, the Licensor herein, a copy of which is on file at the principal office of said The Cleveland Trust Company in the City of Cleveland, and open to the in-

* Pistons per se means pistons whose patentability depends upon physical, structural characteristics of the piston and not upon the character of the material in the piston or the molds, machines or the processes by which the piston is made.

spection of the Licensee, and unless terminated as hereinbefore provided, shall terminate with the date of expiration of the last Letters Patent now or hereafter embraced in said Declaration of Trust and Agreement.

In Witness Whereof, the parties have caused this instrument to be executed in duplicate by their respective [fol. 1392] officers hereunto duly authorized as of this 26th day of April, A. D., 1924.

THE CLEVELAND TRUST COMPANY,
By R. A. MALM,
Vice President.
(Corporate Seal)

Attest:
A. J. PERFLER,
Ass't. Tr. Officer.

ALUMINUM COMPANY OF AMERICA,
By W. P. KING,
Vice President.

Attest:
G. R. GIBBONS,
Secretary.

(Corporate Seal)

Approved for Execution by The C. T. Co.
R. T. S., *Counsel.*

* * * * * * *

[fol. 1393] EXHIBIT A

LICENSE AGREEMENT

This Agreement made this 23rd day of April, 1920, between The Cleveland Trust Company, a corporation of the State of Ohio, hereinafter called the Licensor, and Nordyke & Marmon Company, a corporation of the State of Indiana, hereinafter called the Licensee.

Witnesseth, that

Whereas, the Licensor owns and holds title to the following: (a) Letters Patent of the United States No. 1,092,870, patented April 14, 1914, to E. O. Spillman and L. P. Mooers, for Piston for Explosion Engines or Motors; (b) application for Letters Patent of the United States, Sr. No.

106,502 and 106,503, filed June 28, 1916, by Louis P. Mooers for Pistons for Internal Combustion Motors; and (c) also owns and has title to all claims for damages and profits arising out of past infringement by the Licensee of said Letters Patent, and

Whereas, the Licensee is desirous of acquiring a license under said Letters Patent and those which may be granted upon the aforesaid applications for Letters Patent:

Now, Therefore, for and in consideration of the premises, of the covenants and agreements of the parties hereto, respectively, as hereinafter set forth, and in further consideration of the assignment of Letters Patent of the United States No. 1,293,846, dated February 11, 1919, to Licensor, by Howard C. Marmon, the parties hereto have covenanted and agreed, and do hereby covenant and agree with each other, as follows:

[fol. 1394] A. The Licensor, on its part, does hereby:

(1) Grant to the Licensee the right and license, not exclusive, to manufacture, have manufactured for it, assemble, and use in and sell for use in Licensee's engines, mechanism and apparatus having and containing any or all of the inventions shown, described and claimed in the above recited Letters Patent and applications for Letters Patent and the Letters Patent of the United States which may be granted upon the latter, or either of them.

(2) Release and discharge the Licensee and all who have sold or used the product of the Licensee from any and all claims whatsoever for damages and profits arising by reason of infringement of said Letters Patent by Licensee's product.

B. It is understood and mutually agreed that:

(1) This license is not divisible and is not assignable by the Licensee excepting to a successor in business of the Licensee.

(2) This agreement is made by the Licensor subject to the terms, provisions and conditions of a certain Declaration of Trust and Agreement entered into, in writing, as of the date of August 4, 1917, by and between Louis P. Mooers and George B. Pitts, as Grantors, and The Cleveland Trust Company, et al., as Trustee, including Article F-2 thereof, which reads:

"2. No debt or liability shall be incurred by the Trustee, either collectively or individually, except such as may be incidental to the management and development of said 'Property' and the Trustee shall have no power to bind the beneficiaries hereunder, or any of them personally; and in every written contract which the Trustee, or either of them, shall authorize, enter into or make, reference shall be made to this Declaration of Trust; and each person or corporation contracting with the Trustees, or either of them, shall look to the funds and 'Property' of the Trust for payment under such contract or for the payment of any [fols. 1395-1396] debt, judgment or decree, or of any money that may otherwise become due and payable; and neither of the Trustees, nor any beneficiary hereunder, shall be personally liable therefor."

A copy of which Agreement is on file at the principal office of said The Cleveland Trust Company in the City of Cleveland, Ohio, and open to inspection of the Licensee.

In Testimony Whereof, said parties have hereunto set their hands and seals by their respective officers hereunto duly authorized by said The Cleveland Trust Company and said Nordyke & Marmon Company, respectively, the execution being at the places and on the dates appearing under their respective names below.

THE CLEVELAND TRUST COMPANY,
By E. L. MASON,
Vice President.

Attest:
E. B. MERRELL,
A-Secretary.

Cleveland, Ohio,
Dated: May 6th, 1920.

NORDYKE & MARMON COMPANY,
By W. C. MARMON,
President.

Attest:
H. G. SHAFER,
Secretary.

Indianapolis, Indiana. Dated April 23rd, 1920.

• • • • • • •

[fol. 1397] **PLAINTIFFS' EXHIBIT NO. 38c**

License Agreement between Walker M. Levitt Co., W. M. Levitt Corp., Walker M. Levitt and The Cleveland Trust Company, Dated April 11, 1924

(Filed January 27, 1934.)

Agreement

This Agreement made and entered into this 11 day of April, 1924, by and between Walker M. Levett Company and W. M. Levett Corporation, both being corporations of the State of New York and Walker M. Levett, of New York City, jointly and severally, (hereinafter referred to as parties of the first part) and The Cleveland Trust Company, of Cleveland, Ohio, a corporation of the State of Ohio, (hereinafter referred to as the Trust Company).

Witnesseth:

Whereas, the Parties of the First Part own the entire right, title and interest in and to applications for Letters Patent of the United States, Serial No. 470,502, filed May 18, 1921 of Gustav R. Kelm; and

Whereas, parties of the first part desire, under certain conditions, to dispose of their interest in and to the said application for patent and in any other patents or applications for Letters Patent relating to pistons per se* which they may own wholly or in part, or subsequently acquire, and

Whereas, the Trust Company desires to obtain the entire right, title and interest in and to the said application for letters patent and the entire right, title and interest possessed by the parties of the first part, and each of them, in and to any other patents or applications relating to pistons per se now owned or subsequently acquired by the parties of the first part together with certain rights to past infringements of the said patent or patents and application or applications.

---

* Pistons per se means pistons whose patentability depends upon physical, structural characteristics of the piston and not upon the character of the material in the piston or the molds, machines or the processes by which the piston is made.

Now, Therefore, in consideration of the covenants and agreements of the parties hereto, respectively as hereinafter set forth, said parties have covenanted and agreed, [fol. 1398] and do hereby covenant and agree with each other as follows:

1. The Parties of the First Part agreed to sell, assign, transfer and set over to and hereby do sell, assign, transfer and set over to The Cleveland Trust Company as trustee under a certain conveyance, Declaration of Trust and Agreement dated March 7, 1922, copy of which is attached, marked "Exhibit A"* and another copy of which is on file with The Trust Company, the entire right title and interest in and to said application for Letters Patent Serial No. 470,502 and the entire right, title and interest possessed by the Parties of the First Part, and each of them, in and to any Letters Patent or applications for Patent relating to pistons per se now owned, held, wholly or in part, on the date of the execution of this agreement or subsequently acquired; together with the right to sue and collect for all past infringements of the said patent or patents, or of any patent or patents issuing from such application or applications, and to collect damages and profits arising out of such infringement and apply the same to the benefit of The Cleveland Trust Company, as trustee.

2. The Parties of the First Part hereby agree for themselves, their respective executors and legal representatives, to execute and deliver to The Cleveland Trust Company, as trustee, any and all other papers or documents necessary or desirable more fully to convey to The Cleveland Trust Company, as trustee, the entire right, title and interest in and to the said applications, and Letters Patent when, and as, the same may be requested by The Cleveland Trust Company as trustee, and to do any and all further acts which may be desirable or necessary more effectually to secure to or vest in The Cleveland Trust Company, as trustee, its successors and assigns the entire right, title and interest in and to the said invention, Letters Patent and applications hereby sold, assigned and transferred or intended so to be.

---

* PRINTER'S NOTE:

The "Exhibit A" referred to above was not attached to Exhibit 38c.

3. The Parties of the First Part hereby agree for themselves, their respective executors and legal representatives, to assign to The Cleveland Trust Company, as Trustee, without further consideration the entire right, title and [fol. 1399] interest in and to any United States Letters Patent or application relating to pistons per se which they may in the future acquire forthwith upon obtaining the same together with whatever rights they may acquire to sue and collect for past infringement thereof and to apply any damages and profits so recovered to the benefit of The Cleveland Trust Company as trustee.

4. In case the sub-license from the Aluminum Company of America to the parties of the first part, a copy of which is attached hereto, made a part hereof and marked "Exhibit B,"* is canceled or terminated for any reason whatsoever, excepting the failure of parties of the first part reasonably to comply with their obligations thereunder, and said parties of the first part forthwith applied to whomsoever then holds or controls as owner or exclusive licensee, the inventions, applications for Letters Patent and Letters Patent embraced by such sub-license, for another sub-license upon terms at least as favorable for parties of the first part as those in said sub-license "B" contained, and such owner or exclusive licenses as the case might be, fails to execute or deliver to parties of the first part such a sub-license within thirty (30) days from the date of such application by said parties of the first part, then and in that event, this agreement shall be deemed and construed henceforth to operate as such a sub-license having the terms and conditions of the sub-license, Exhibit "B," applicable for such purpose and said parties of the first part shall account thereunder directly to The Trust Company.

5. This agreement, in the construction of which the laws of the State of Ohio shall govern, is made by The Trust Company under title conveyed by or acquired under and subject to the terms, provisions and conditions of said Conveyance, Declaration of Trust and Agreement of which "Exhibit A" is a copy.

---

*PRINTER'S NOTE:

The "Exhibit B" referred to above was not attached to Exhibit 38c.

[fols. 1400-1402] In Witness Whereof the parties hereto have set their hands and affixed their seals this 11th day of April, 1924.

WALKER M. LEVETT COMPANY,
W. M. LEVETT,
President.

(Corporate Seal)

ATTEST:
L. E. VALCOURT,
Secretary.

W. M. LEVETT CORPORATION,
W. M. LEVETT,
President.

(Corporate Seal)

ATTEST:
L. E. VALCOURT,
Secretary.

WALKER M. LEVETT.

A. F. HUSSEY.

THE CLEVELAND TRUST COMPANY,
By R. A. MALM,
Vice President.

(Corporate Seal)

ATTEST:
A. J. PERFLER,
Ass't. Trust Officer.

Apr 11 1924

Approved for Execution by The C. T. Co.
R. T. S., *Counsel.*

* * * * * * *

[fol. 1403] **PLAINTIFF'S EXHIBIT No. 38d**

License Agreement between The National Piston Company, Gustave E. Franquist, James E. Diamond and The Cleveland Trust Company, Dated April 11, 1924.

(Filed January 27, 1934.)

AGREEMENT

This Agreement made and entered into this 11th day of April, 1924, by and between The National Piston Company, Incorporated, a corporation of the State of New York, Gus-

tave E. Franquist, of Rochester, N. Y. and James E. Diamond, of Mount Vernon, N. Y. jointly and severally, (hereinafter referred to as Parties of the First Part) and The Cleveland Trust Company of Cleveland, Ohio, a corporation of the State of Ohio, (Hereinafter referred to as the Trust Company).

Witnesseth:

Whereas, the Parties of the First Part own the entire right, title and interest in and to United States Letters Patent, No. 1,153,902, issued September 21, 1915, to Gustave E. Franquist and,

Whereas, Parties of the First Part desire, under certain conditions, to dispose of their interest in and to the said patent and in any other patents or applications for Letters Patent relating to pistons per se* which they may own wholly or in part, or subsequently acquire, and

Whereas, The Trust Company desires to obtain the entire right, title and interest in and to the said patent to Franquist and the entire right, title and interest possessed by the Parties of the First Part, and each of them, in and to any other patents or applications relating to pistons per se now owned or subsequently acquired by the parties of the First Part together with certain rights to past infringements of the said patent or patents and application or applications.

Now, Therefore, in consideration of the covenants and agreements of the parties hereto, respectively, as hereinafter set forth, said parties have covenanted and agreed, and do hereby covenant and agree with each other as follows:

[fol. 1404] 1. The Parties of the First Part agree to sell, assign, transfer and set over to and hereby do sell, assign, transfer and set over to The Cleveland Trust Company as trustee under certain Conveyance, Declaration of Trust and Agreement dated March 7, 1922, a copy of which is at-

---

* Pistons per se means pistons whose patentability depends upon physical, structural characteristics of the piston and not upon the character of the material in the piston or the molds, machines or the processes by which the piston is made.

tached, marked "Exhibit A"* and another copy of which is on file with the Trust Company, the entire right, title and interest in and to United States Letters Patent No. 1,153,902, issued September 21, 1915, and the entire right, title and interest possessed by the Parties of the First Part, and each of them, in and to any Letters Patent or applications for Patent relating to pistons per se now owned, held, wholly or in part, on the date of execution of this agreement or subsequently acquired; together with the right to sue and collect for all past infringements of the said patent or patents, or of any patent or patents issuing from such application or applications, and to collect damages and profits arising out of such infringement and apply the same to the benefit of The Cleveland Trust Company as trustee; except that this assignment does not convey or intend to convey to The Trust Company the right to sue for and collect for past infringement of said Franquist patent by Walker M. Levett of The W. M. Levett Corporation or the Walker M. Levett Company, of New York City.

2. The Trust Company hereby agrees forthwith upon the execution of this agreement to issue in the name of and transfer to the said Parties of the First Part, or their nominee or nominees, three hundred (300) shares in the beneficial interest created by said Conveyance, Declaration of Trust and Agreement, of which "Exhibit A" is a copy.

3. The Parties of the First Part hereby agree for themselves, their respective executors and legal representatives, to execute and deliver to The Cleveland Trust Company, as trustee, any and all other papers or documents necessary or desirable more fully to convey to The Cleveland Trust Company, as trustee, the entire right, title and interest in and to the said Letters Patent and applications, when, and as, the same may be requested by The Cleveland Trust Company, as trustee, and to do any and all further acts which may be desirable or necessary more effectually to secure [fol. 1405] to or vest in The Cleveland Trust Company, as trustee, its successors and assigns the entire right, title and interest in and to the said invention, Letters Patent and

---

* PRINTER'S NOTE:

The "Exhibit A," referred to above was not attached to Exhibit 38d.

applications hereby sold, assigned and transferred or intended so to be.

4. The Parties of the First Part hereby agree for themselves, their respective executors and legal representatives, to assign to The Cleveland Trust Company, as trustee, without further consideration the entire right, title and interest in and to any United States Letters Patent or application relating to pistons per se which they may in the future acquire forthwith upon obtaining the same together with whatever rights they may acquire to sue and collect for past infringement thereof and to apply any damages and profits so recovered to the benefits of The Cleveland Trust Company, as Trustee.

5. In case the sub-license from the Aluminum Company of America to The National Piston Company, Incorporated, a copy of which is attached hereto, made a part hereof and marked "Exhibit B,"* is cancelled or terminated for any reason whatsoever, excepting the failure of The National Piston Company, Incorporated, reasonably to comply with its obligations thereunder, and said The National Piston Company, Incorporated, forthwith applies to whomsoever then holds or controls as owner or exclusive licensee, the inventions, applications for Letters Patent and Letters Patent embraced by such sub-license, for another sub-license upon terms at least as favorable for The National Piston Company, Incorporated, as those in said sub-license "B" contained, and such owner or exclusive licensee as the case might be, fails to execute or deliver to The National Piston Company, Incorporated, such a sub-license within thirty (30) days from the date of such application by said The National Piston Company, Incorporated, then and in that event, this agreement shall be deemed and construed henceforth to operate as such a sub-license having the terms and conditions of the sub-license, Exhibit "B," applicable for such purpose and The National Piston Company, Incorporated, shall account thereunder directly to The Trust Company.

[fols. 1406-1407] 6. This agreement, in the construction of which the laws of the State of Ohio shall govern, is made

*PRINTER'S NOTE:
The "Exhibit B" referred to above was not attached to Exhibit 38d.

by the Trust Company under title conveyed by or acquired under and subject to the terms, provisions and conditions of said certain Conveyance, Declaration of Trust and Agreement, of which "Exhibit A" is a copy.

In Witness Whereof the parties hereto have set their hands and affixed their seals this 11th day of April 1924.

THE NATIONAL PISTON COMPANY,
INCORPORATED,
HENRY MONKLEY,
President,

J. E. DIAMOND,

GUSTAVE E. FRANQUIST.

Attest:

J. E. DIAMOND,
[*Secretary.*]*
Vice Pres.

THE CLEVELAND TRUST COMPANY,
R. A. MALM,
Vice-President.

Attest: (Corporate Seal)

A. J. PERFLER,
Ass't Trust Officer.

Approved for Execution by The C. T. Co.
R. T. S., *Counsel.*

* * * * * * *

[fol. 1408] **PLAINTIFFS' EXHIBIT No. 38e**

License Agreement between Kant-Skore Piston Company and The Cleveland Trust Company, dated April 11, 1924

(Filed January 27, 1934)

Apr. 11, 1924

AGREEMENT

This Agreement made and entered into this 11th day of [March]* April, 1924, by and between The Kant-Skore Piston Company, an Ohio Corporation of Cincinnati, Ohio, (hereinafter sometimes referred to as Kant-Skore) and

[* Matter enclosed in brackets struck out in copy.]

The Cleveland Trust Company of Cleveland, Ohio, a corporation of the State of Ohio, (hereinafter referred to as The Trust Company)

Witnesseth:

Whereas, Kant-Skore owns the entire right, title and interest in and to United States Letters Patent

Hater, 1,485,078, February 26, 1924.

and an application for United States Letters Patent Serial No. 588,473, filed in the name of Hater.

Whereas, Kant-Skore desires, under certain conditions, to dispose of their interest in and to the said patents and in any other patents or applications for Letters Patent relating to pistons per se * which they may own wholly or in part, or subsequently acquire, and

Whereas, The Trust Company desires to obtain the entire right, title and interest in and to the said patents and the entire right, title and interest possessed by Kant-Skore in and to any other patents or applications relating to pistons per se now owned or subsequently acquired by Kant-Skore together with certain rights to past infringements of the said patent or patents and application or applications.

Now, Therefore, in consideration of the covenants and agreements of the parties hereto, respectively as herein-[fol. 1409] after set forth, said parties have covenanted and agreed, and do hereby covenant and agree with each other as follows:—

1. Kant-Skore agrees to sell, assign, transfer and set over to and hereby sells, assigns, transfers and sets over to The Cleveland Trust Company as trustee of a certain beneficial interest created by a certain Conveyance, Declaration of Trust and Agreement dated March 7th, 1922, copy of which is attached, marked "Exhibit A," ** and another copy of which is on file with The Trust Company,

* Pistons per se means pistons whose patentability depends upon physical, structural characteristics of the piston and not upon the character of the material in the piston or the molds, machines or the processes by which the piston is made.

** PRINTER'S NOTE:

The "Exhibit A" referred to above was not attached to Exhibit 38e.

the entire right, title and interest in and to United States Letters Patent, and applications enumerated above, and the entire right, title and interest possessed by Kant-Skore in and to any Letters Patent or applications for Letters Patent relating to pistons per se now owned, held, wholly or in part, on the date of the execution of this agreement or subsequently acquired; together with the right to sue for past infringements of the said patent or patents, or of any patent or patents issuing from such application or applications, and to collect damages and profits arising out of such infringement and apply the same to the benefit of The Cleveland Trust Company, as trustee. It is agreed that whatever right Kant-Skore now owns in or under the Spillman patent No. 1,325,176, December 16, 1919, is not transferred to The Trust Company by this agreement.

2. The Trust Company hereby agrees forthwith upon the execution of this agreement to issue in the name of and transfer to Kant-Skore fifty (50) shares in the beneficial interest created by and under said certain Conveyance, Declaration of Trust and Agreement, of which exhibit "A" is a copy.

3. Kant-Skore hereby agrees for itself, successors and its legal representatives to execute and deliver to The Cleveland Trust Company as Trustee any and all other papers or documents necessary or desirable more fully to convey to The Cleveland Trust Company, as Trustee, the entire right, title and interest in and to the said inventions, Letters Patent and applications and each of them hereby sold, assigned and transferred or intended so to be when, and as, the same may be requested by The Trust Company, [fol. 1410] as Trustee, its successors and assigns.

4. Kant-Skore hereby agrees to assign to The Cleveland Trust Company, as Trustee, without further consideration, the entire right, title and interest in and to any United States Letters Patent or application relating to pistons per se which it may in the future acquire forthwith upon obtaining the same together with whatever rights they may acquire to sue and collect for past infringement thereof and to apply any damages and profits so recovered to the benefit of The Cleveland Trust Company as trustee.

5. In case the sub-license from the Aluminum Company of America to the Kant-Skore Company, a copy of which

is attached hereto, made a part hereof, and marked "Exhibit B," * is cancelled or terminated for any reason whatsoever, excepting the failure of Kant-Skore Company reasonably to comply with its obligations thereunder, and said Kant-Skore Company forthwith applies to whomsoever then holds or controls as owner or exclusive licensee, the inventions, applications for Letters Patent and Letters Patent embraced by such sub-license for another sub-license upon terms at least as favorable for Kant-Skore Company as those in said sub-license "B" contained, and such owner or exclusive licensee as the case might be, fails to execute or deliver to Kant-Skore Company such a sub-license within thirty (30) days from the date of such application by said Kant-Skore Company, then and in that event, this agreement shall be deemed and construed henceforth to operate as such a sub-license having the terms and conditions of the sub-license, Exhibit "B," applicable for such purpose and Kant-Skore Company shall account thereunder directly to The Trust Company.

6. This agreement, in the construction of which the laws of the State of Ohio shall govern, is made by The Trust Company under title conveyed by or acquired under and subject to the terms, provisions and conditions of said certain Conveyance, Declaration of Trust and Agreement, of which exhibit "A" is a copy.

[fol. 1411] In Witness Whereof the parties hereto have set their hand and affixed their seal this 11th day of April, 1924.

The Cleveland Trust Company, By R. A. Malm, Vice President.

Attest: A. J. Perfler, Ass't Trust Officer.

The Kant-Skore Piston Company, By H. J. Hater, V. P.

Attest: R. T. Mesker, Secy.

Approved for Execution by The C. T. Co., R. T. S., Counsel.

* * * * * * *

* PRINTER'S NOTE:

The "Exhibit B" referred to above was not attached to Exhibit 38e.

[fol. 1412] **PLAINTIFFS' EXHIBIT No. 39a**

Letter from Aluminum Company of America to The Cleveland Trust Company, dated September 19, 1927

(Filed January 27, 1934)

Cleveland, Ohio, September 19, 1927

The Cleveland Trust Company, Trustee under Declaration of Trust and Agreement between L. P. Mooers et al., dated March 7, 1922, Cleveland, Ohio.

Gentlemen:

We hereby consent to your executing and carrying out the agreement dated October 12th, 1927, between The Cleveland Trust Company, Trustee, and Bohn Aluminum & Brass Corporation, which has been initialled by Mr. W. P. King, and the license agreement dated as of Oct. 12th as of Sept. 15th, 1927, between The Cleveland Trust Company, Trustee, as Licensor and Bohn Aluminum & Brass Corporation as Licensee, which has also been initialled by Mr. W. P. King,—it being understood that said license agreement is to be carried out according to the terms thereof and is not to be changed or modified without our consent; and provided that either the agreements between The Cleveland Trust Company and Walker M. Levett Company, et al., and The National Piston Company, et al., respectively, each dated April 11, 1924, shall be surrendered and cancelled, or all rights under paragraph four of the former agreement and paragraph five of the latter agreement be waived and extinguished.

This letter of consent or authority to execute shall continue unless extended for a further period at that time, until thirty days from date hereof.

Very truly yours,

Aluminum Company of America, By W. P. King, Vice-President.

[fol. 1413] **PLAINTIFFS' EXHIBIT No. 39b**

Letter from Aluminum Company of America to The Cleveland Trust Company, dated October 12, 1927

(Filed January 27, 1934)

Detroit, Mich., October 12, 1927.

The Cleveland Trust Company, Trustee under Declaration of Trust and Agreement between L. P. Mooers et al., dated March 7, 1922, Cleveland Ohio.

Gentlemen:

Supplementing our letter of September 19, 1927, to you we beg to say that it is understood and we hereby agree, that in case we surrender the license heretofore granted to us by you under date of April 26, 1924, any re-assignment of the patents, patent applications or other patent rights which have been assigned by us to you under said license agreement, shall be made subject to the license granted by you to the Bohn Aluminum & Brass Corporation by the agreement [dated]* executed this day [1927]* between you and the Bohn Aluminum & Brass Corporation, the execution of which on your part we consented to in our letter of September 19th, 1927.

Very truly,
Aluminum Company of America, By W. P. King,
Vice President.

[fol. 1414] **PLAINTIFFS' EXHIBIT No. 39c**

License Agreement between The Cleveland Trust Company and Bohn Aluminum & Brass Corporation, dated September 15, 1927, with Lists A and B Attached

(Filed January 27, 1934)

License Agreement

This License Agreement, made and entered into by and between The Cleveland Trust Company, of Cleveland, Ohio as Trustee under the Declaration of Trust and Agreement

---

[* Matter enclosed in brackets struck out in copy.]

between L. P. Mooers et al. and The Cleveland Trust Company, dated March 7, 1922, hereinafter sometimes called the Licensor, and Bohn Aluminum & Brass Corporation, a Michigan corporation of Detroit, Michigan, hereinafter sometimes called the Licensee, witnesseth:—

Whereas the Licensor owns the entire right, title and interest in and to the Letters Patent and applications for Letters Patent in the United States as set forth in List A, attached hereto, and has arranged to acquire the entire right, title and interest in and to the Letters Patent and applications set forth in List B, attached hereto; and

Whereas, the Licensor may acquire other United States patents, patent applications and patent rights relating to pistons per se* during the life of this agreement; and

Whereas, the said Licensee is desirous of acquiring a license to make, use and sell the inventions included in the said patents and applications acquired and to be acquired by the Licensor for the full term for which said patents are or shall be granted;

Now, Therefore, in consideration of the premises and of the covenants and agreements of the parties hereto, respectively, as hereinafter set forth, said parties have covenanted and agreed, and do hereby covenant and agree with each other as follows:

[fol. 1415] *Amended—January 1, 1928*

I

The Licensor grants the Licensee the non-exclusive right to make, use and sell a maximum of five million (5,000,000) pistons and/or piston castings per accounting year (each year beginning July 1st) embodying any of the inventions covered by any of the patents and applications in the above named lists, being all of the patents and applications for patents relating to pistons per se now owned by the

---

* Pistons per se means pistons whose patentability depends upon physical, structural characteristics of the piston and not upon the character of the material in the piston or the molds, machines or the processes by which the piston is made.

Licensor, or to be covered by any continuations and divisions, renewals or reissues of the same, for the full term of each of said patents throughout the United States, the territories and possessions thereof. In case the Licensee makes and sells no so-called controlled type* pistons or castings which are, after sale, modified or to be modified into controlled type pistons, during any accounting year, the maximum of five million pistons and/or piston castings provided herein for that year is waived and the number of pistons and/or piston castings the licensee may make hereunder for that year is unlimited. This license and agreement will be automatically extended to cover any other and further patents or applications or other rights under patents which the Licensor may acquire relating to pistons per se, subject to the conditions imposed thereon when received by the Licensor, unless excluded therefrom by the Licensee as hereinafter provided, and the Licensor agrees to execute any further instruments and perform any further acts if any are required, to consummate the granting of such licenses to the Licensee.

II

The Licensor releases and discharges the Licensee, all its vendees and/or users of pistons, the castings for which were heretofore acquired from the Licensee, from any and all claims whatsoever for damages or profits by reason of any alleged past infringement of any of the patents in lists A and B hereto attached now owned by the Licensor and arising out of the manufacture, use and sale of such pistons; [fol. 1416] and from any claim or claims for past damages or profits under patents which shall be acquired by the Licensor in the future, during the continuance of this agreement, and under which the Licensee shall accept a license hereunder, and theretofore arising out of the manufacture, use and sale of such pistons; and agrees not to institute or to aid or abet the institution of any suit against

---

* By controlled type of aluminum piston is meant any piston made in any part of a light metal or of an alloy of a specific gravity less than iron or steel, the expansion and contraction of which is controlled to any extent by any other metal with a coefficient of expansion different from that of the said light metal or alloy.

the Licensee, or the vendees or users of pistons, the castings for which were heretofore acquired from the Licensee, for any alleged past infringement of any patents relating to the subjects covered by the patents or applications named herein or for damages and profits because of alleged past infringement thereof and heretofore arising out of the manufacture, use and sale of such pistons.

III

1. (a) The Licensor shall institute and prosecute to a conclusion with due diligence suit or suits against any or all infringers of the patents included within the terms of this agreement necessary reasonably to protect the interests of the Licensee acquired hereunder, provided that the Licensor be indemnified to its satisfaction by the Licensee for any costs or expenses which the Licensor may suffer or sustain in connection with or growing out of any such suit.

(b) The Licensor shall defend any suit or suits, so far as such defense shall be necessary reasonably to protect the interests of the Licensee acquired hereunder, brought because of the alleged infringement of any Letters Patent covering the design of pistons made, sold or used under this agreement and for which royalties are paid under this agreement, provided that the Licensor be indemnified to its satisfaction by the Licensee for any costs or expenses which the Licensor may suffer or sustain in connection with or growing out of any such defense.

2. Should the Licensor bring and prosecute or defend as above provided such infringement suit or suits at its own expense, all profits or damages recovered in said suit or suits shall be the absolute property of the Licensor.

3. In the event of the failure of the Licensor promptly to institute and vigorously prosecute or to defend such suit or suits as may be necessary reasonably to protect the interests of the Licensee hereunder, then and in that event, the Licensee having reasonably indemnified the Licensor, [fol. 1417] may in the name of the Licensor or the names of the Licensor and Licensee jointly institute or adopt and diligently prosecute or defend at the Licensee's expense such suit or suits as may be required reasonably to protect its interests. The Licensor at any time shall have the right

to join in the prosecution or defense of such suit or suits with its own counsel and at its own expense.

4. Should the Licensee bring or prosecute or defend as above provided any such infringement suit or suits or should the Licensee furnish indemnification to the Licensor in connection with suits brought or prosecuted or defended by the Licensor and pay any sum on account of such indemnification, it shall have the right to apply all royalties payable by it on the reasonable costs and expenses of such suit or suits, including attorney's fees, or on said sum paid on account of indemnification and shall apply the sum, if any, recovered in any such suit, first, to the reimbursement of it for said reasonable expenses and costs, including attorney's fees, or sums paid on account of indemnification, and not theretofore reimbursed to it out of royalties, and second, to the payment to the Licensor of all sums theretofore deducted by the Licensee from royalties and applied to the said reasonable costs and expenses, including attorney's fees, of such suit or payments of indemnification, and the balance shall be the absolute property of the Licensee.

IV

The Licensee agrees that it will within the months of January, April, July and October of each year from and after the execution hereof, furnish to the Licensor, its successors or assigns in interest, a written statement under oath which shall show:—

(a) the number of pistons and piston castings made by or for it or imported by it, and used, sold * or otherwise disposed of by it during the preceding three calendar months, which contain or which to the Licensee's knowledge are to be modified or fabricated by the Licensee's vendees to contain and embody any invention covered by any of the claims of any of the Letters Patent and applications recited in Lists A and B hereto attached, or in the future acquired by the Licensor and included herein.

[fol. 1418] This report shall be made whether or not the Licensee makes, uses or sells any pistons and/or castings therefor during the preceding royalty period.

---

*Sold in this contract means and includes only licensed pistons which are delivered during the period.

(b) the number of controlled type pistons and castings for controlled type pistons made by or for it or imported by it, and used, sold or otherwise disposed of by it during the preceding three calendar months.

This report shall be made whether or not the Licensee makes, uses or sells any controlled type pistons and/or castings therefor during the preceding royalty period.

(c) the number of such pistons and piston castings sold by the Licensee and for which the vendee has been subsequently credited.

The first report shall include the pistons and/or piston castings covered by this Article, used, sold or otherwise disposed of between [the date of this contract]* September fifteenth and October 1, 1927.

Alteration (OK)
B. A. & B. Corpn. PAM
The C. T. Co.—AJP
A. Co. of Am.—WPK

V

The Licensee will pay the Licensor a royalty of one cent (1¢) upon each piston used, sold or otherwise disposed of by the Licensee during the life of this agreement, embodying in its construction any invention covered by one or more of the claims of the Letters Patent and applications named in Lists A and B attached hereto, or in the future acquired by the Licensor and added hereto, and upon each piston casting sold or otherwise disposed of by the Licensee with the intention or the knowledge of the Licensee that it shall be modified or fabricated by the Licensee's vendee in such a way as to embody in its construction any invention covered by one or more of the claims in the said Letters Patent or applications.

It is understood that no royalties will be payable or collectible upon the licensed pistons or piston castings which have been sold and for which the vendee thereof has been subsequently credited, and that if any royalties have been paid upon the licensed pistons or piston castings which are [fol. 1419] sold, and for which the vendee has been subsequently credited, the Licensee shall have credit therefor upon the next due payment.

[*Matter enclosed in brackets, struck out in copy.]

VI

For the purpose of the interpretation of the provisions of this agreement, it is agreed that the commercial controlled type pistons heretofore manufactured, or for which castings have heretofore been manufactured, by Bohn Corporation and Aluminum Company of America, are covered by claims of the patents included in Lists A and B hereto attached.

VII

Within thirty (30) days after it shall have furnished, in January, April, July and October of each year, the statements specified in Article IV hereof, the Licensee shall and will pay to the Licensor, its successors or the assigns of its interest in said Letters Patent, the royalties upon the pistons and piston castings covered by said reports, at the rate prescribed.

VIII

The Licensee agrees that it will keep accurate books of account, giving full particulars of the Licensee's business with respect to the licensed pistons and piston castings covered by this agreement and will admit the Licensor or its duly accredited agent at all reasonable times to inspect the same.

IX

In the event that the combination set forth in any of the claims of the Letters Patent shown in Lists A and B hereto attached or of the applications for Letters Patent shown in said lists A and B and of the Letters Patent to be granted on said applications, and/or acquired in the future and added hereto, is held by a court of final jurisdiction or by an inferior court from whose decree no appeal is taken or the appeal is denied or dismissed, to be an infringement of any other patent (other than patents owned by the Licensee or under which the Licensee is licensed) in any patent suit brought in the United States against the Licensor, the Licensee, any other of the Licensor's licensees, any sub-licensees or any of its or their vendees, the Licensee shall have, and is hereby given, the right and option to exclude from this license any such claim or claims or the [fol. 1420] Letters Patent or applications for Letters Pat-

ent containing such claim or claims, as the case may be, and to have the royalty payable hereunder reduced proportionately to the reduction, if any, caused by such judicial holdings, in the value of the patents and applications comprehended by this agreement, such proportion to be determined by arbitration as hereinafter in Paragraph XVIII hereof provided, or to terminate this agreement altogether, by giving to the Licensor notice in writing of its election so to do within six (6) months from the rendition of the judicial holding of the court of final jurisdiction or after the expiration of the time for appeal or after the appeal has been denied or dismissed.

X

This agreement and license shall be transferable only to the successors or assigns of the entire casting business of the Licensee or the entire business of either of the parties hereto, but in that event the successors or assigns shall be bound by the provisions of this agreement and obligated to conform thereto; provided, however, that any successor to The Cleveland Trust Company, as Trustee under said Declaration of Trust and Agreement, dated March 7, 1922, shall be deemed, for the purposes hereof, to be the successor and assign of the entire business of the Licensor.

XI

The Licensee will not during the life of this agreement contest, or aid others in contesting, the scope or validity of any of the Letters Patent included within this agreement or afterwards acquired by the Licensor and included in this agreement.

XII

The Licensee hereby is given the right and option to exclude from this license any Letters Patent or applications for Letters Patent or other patent rights which the Licensor may acquire after the execution of this license, provided the Licensee gives the Licensor notice in writing of such exclusion within ninety (90) days after notice in writing to the Licensee by the Licensor of the acquisition of such Letters Patent or applications or other patent rights.

[fol. 1421]

XIII

The Licensee shall pay royalties only upon pistons and piston castings delivered during the term of this license.

XIV

If either of the parties hereto neglects or refuses to keep any of its covenants herein, then the other party hereto may serve on the derelict party by registered mail a notice in writing of such default and if the derelict party shall continue such default for thirty (30) days after the serving of such notice, then the aggrieved party may at its option cancel this license by a notice in writing of such cancellation and termination, provided, however, that the foregoing remedy shall not exclude any other remedy which the aggrieved party may have at law or in equity. The waiver of any breach by either party shall not be interpreted as constituting a waiver of any further breach or breaches.

XV

The Licensor hereby grants to the Licensee the right to make, use and sell in the United States pistons embodying the inventions covered by any foreign patents or applications for foreign patents, which the Licensor now owns or controls, or in the future acquires, for sale and use in foreign countries covered by said patents and/or applications. The Licensor releases the Licensee, its vendees and all users of its pistons, from any claim or claims for alleged infringement of foreign patents, which the Licensor now has or in the future may acquire and under which the Licensee may accept a license as herein provided. The Licensor agrees, upon demand of the Licensee, to execute all instruments and perform all acts necessary to grant the licenses under this paragraph. This license and agreement will be automatically extended to cover pistons under any other and further foreign patents or applications for foreign patents or other rights under foreign patents on pistons per se which the Licensor may acquire in the future, unless excluded therefrom by the Licensee as provided for in this contract and the Licensor agrees to execute any further instruments and perform any further acts, if any are required, to consummate the granting of licenses to the Licensee under this section of this agreement.

[fol. 1422]

XVI

The Licensee shall use reasonable diligence in manufacturing and/or marketing pistons embodying inventions, licensed hereunder, and, in the event that, during the con-

tinuance of this agreement, it should not do so, the Licensor shall have the following right, option and privilege exercisable by it forthwith upon the finding by arbitration as hereinafter provided that the Licensee has not used and is not using such diligence:

(a) To cancel or terminate this agreement by giving six (6) months' notice in writing to the said Licensee of its desire and intentions so to do; whereupon at the expiration of said six (6) months from the date of said notice this agreement shall be terminated.

XVII

Should the Licensee, taking advantage of its privilege under any of the provisions of this contract, elect to terminate this contract and stand out from under the same, the Licensee shall not be estopped to deny the validity of any of the patents covered or comprehended by this contract and shall not be deprived of any of the defenses or the rights of a defendant in an ordinary patent infringement suit, but, on the contrary, shall stand in the position of one who had never entered into this contract.

XVIII

In the event either party hereto calls for an arbitration as provided for in this contract, each party shall select an arbitrator and the two arbitrators shall select a third arbitrator. In the event that the two arbitrators fail to select a third or in the event either party fails to select its arbitrator, it is agreed that the third and/or second arbitrator may be selected by the district judge of the United States District Court, Northern District of Ohio, Eastern Division, who has then been longest in said office. The three arbitrators thus selected shall constitute the Board of Arbitration and the parties hereto shall submit their contentions to this Board of Arbitration at a time and in a manner determined by the arbitrators. The decision of any two arbitrators shall be final and binding on the parties hereto. Each party shall bear the expense of its arbitrator and both shall bear the expense of the third arbitrator share and share alike.

[fol. 1423] XIX

The Licensor agrees that should it at any time during the life of this agreement grant licenses under the patents,

now included, or in the future included, in this agreement, or under the substantial and material patents now included or to be included in this agreement, at lower rates than one cent ($.01) per piston as provided for herein, or otherwise upon more favorable terms than are provided for herein, then, upon request of Licensee, this agreement shall be modified to make its terms as favorable as those upon which any such subsequent license may be granted.

XX

Amended—January 1, 1928

Except as otherwise provided in Article I hereof, this licensee is limited to five million (5,000,000) pistons and piston castings (together) per accounting year. If the Licensee exceeds that amount in any accounting year without the written consent of the Licensor, and of the Licensor's other licensee (being the exclusive licensee except for this license) under the patents held in the Licensor's trust estate, then the Licensor shall charge and collect an additional royalty of ten cents (10¢) per piston for all pistons and piston castings in excess of the maximum five million (5,000,000) which additional royalty shall be paid by the Licensee to the Licensor on demand, and the Licensor shall diligently proceed by proper proceedings to enjoin and prevent any further such violation of the provisions of this license, or, failing so to enjoin and prevent such violation, the Licensor shall cancel this license.

XXI

This agreement is made by the Licensor under title conveyed by or acquired under and subject to the terms, provisions and conditions of a certain Conveyance, Declaration of Trust and Agreement entered into as of the 7th day of March, 1922, by and between Louis P. Mooers and George B. Pitts and The Cleveland Trust Company, Trustee, the Licensor herein, a copy of which is on file at the principal office of said The Cleveland Trust Company in the City of Cleveland, and open to the inspection of the Licensee, and unless terminated as hereinbefore provided, shall terminate with the date of expiration of the last Letters Patent now or hereafter embraced in said Declaration of Trust and Agreement.

[fol. 1424-1425] XXII

Upon the execution and delivery hereof, Bohn Corporation shall surrender and cancel all of the Sub-licenses under the patents held by the Trust Company which said Bohn Corporation or any of its subsidiary or affiliated companies own.

XXIII

The non-exclusive license granted by this agreement does not convey to the Licensee any rights to grant any sub-licenses thereunder.

In Witness Whereof, the parties hereto have caused this instrument to be executed in duplicate by their respective officers thereunto duly authorized October 12, 1923 as of the 15th day of September, A. D. 1927.

Bohn Aluminum & Brass Corporation,
By P. A. Markey,
Vice-President,
R. T. G.

A. P. Lauer,
Secretary.
(Corporate Seal)

The Cleveland Trust Company, Trustee,
By R. A. Malm,
Vice-President,

A. J. Perfler,
Assistant Trust Officer.
(Corporate Seal)

Approved for Execution by The C. T. Co.
R. T. S., *Counsel.*

* * * * * * *

[fol. 1426] LIST A

Patent Number	Patentee	Date
Re 16,273	R. M. Howdeshell	Feb. 23, 1926
1,092,870	Spillman & Mooers	Apr. 14, 1914
1,153,902	G. E. Franquist	Sept. 21, 1915
1,279,184	J. G. Vincent	Sept. 17, 1918
1,293,846	H. C. Marmon	Feb. 11, 1919

Patent Number	Patentee	Date
1,327,147	H. D. Church	Jan. 6, 1920
1,371,320	C. A. Marien	Mar. 15, 1921
1,347,819	L. P. Mooers	July 27, 1920
1,388,279	C. A. Marien	Aug. 23, 1921
1,402,308	L. P. Mooers	Jan. 3, 1922
1,402,309	L. P. Mooers	Jan. 3, 1922
1,408,066	W. B. & M. Berry	Feb. 28, 1922
1,473,233	R. M. Howdeshell	Nov. 6, 1923
1,551,233	W. G. Berry, et al.	Aug. 25, 1925
1,563,025	H. J. Hater	Nov. 24, 1925

Serial No.	Applicant	Filing Date
563,782	Gustave E. Franquist	May 26, 1922
88,706	Stephen D. Hartog	Feb. 16, 1926
100,496	Harold J. Ness	Apr. 8, 1926
100,497	Harold J. Ness	Apr. 8, 1926
133,909	William C. McCoy	Sep. 7, 1926
143,878	William C. McCoy	Oct. 25, 1926
143,879	William C. McCoy	Oct. 25, 1926
467,587	Stephen D. Hartog	May 7, 1921
470,502	Gustav R. Kelm	May 18, 1921 Renewed Sep. 15, 1923
561,997	James E. Diamond	May 18, 1922
649,481	Louis P. Mooers	July 5, 1923
204,661	Edward J. Gulick	Nov. 30, 1917

[fol. 1427]

LIST B

Inventor	Patent Number	Date
Wasson	1,320,188	10-28-19
Napier	1,403,560	1-17-22
Parkhurst	1,440,549	1- 2-23
Wills	1,441,468	1- 9-23
Pomeroy	1,499,073	6-24-24
Napier	1,525,316	2- 3-25
Jardine	1,563,194	11-24-25
Jardine & Jehle	1,580,491	4-13-26

Applicant	Serial Number	Filing Date
Jardine	450,898	3- 9-21
Jehle & Jardine	544,487	3-17-22

Applicant	Serial Number	Filing Date
Jardine & Jehle	615,324	1-27-23
Welty	39,676	6-26-25
Jardine	47,214	7-31-25
Welty	47,220	7-31-25
Jardine	47,234	7-31-25
Norton	51,748	8-22-25
Jardine	57,838	9-22-25
Jardine	79,527	1- 6-26
Jardine & Cooper	79,651	1- 6-26
Jardine & Cooper	79,800	1- 7-26
Welty	80,173	1- 9-26
Norton	80,902	1-13-26
Evans	84,894	1-30-26
Jardine	100,771	4- 9-26
Jardine	100,772	4- 9-26
Jardine	100,773	4- 9-26
Jardine	100,774	4- 9-26
Welty	128,764	8-12-26
Jardine	137,194	9-23-26
Jardine & Cooper	174,202	3-10-27
Norton	Docket No. 2799 being prepared	
Welty	Docket No. 2834 being prepared.	

[fol. 1428] **PLAINTIFFS' EXHIBIT No. 39d**

Letter from Aluminum Company of America to The Cleveland Trust Company, dated September 19, 1927

(Filed January 27, 1934.)

Aluminum Company of America

Warren P. King
Vice-President

Cleveland, O., September 19, 1927.

The Cleveland Trust Company, Trustee under Declaration of Trust between L. P. Mooers et al., dated March 7, 1922.

Cleveland, Ohio.

Gentlemen:

We beg to advise that we recognize that the commercial controlled type pistons heretofore manufactured, or for

which castings have heretofore been manufactured, by us, are covered by claims of one or more of the patents included in lists A and/or B attached hereto.

Very truly yours,

ALUMINUM COMPANY OF AMERICA,
By W. P. KING,
Vice-President.

P:L

PRINTER'S NOTE:

Lists A and B, attached to the original hereof, having been printed as part of Plaintiffs' Exhibit No. 39c, supra, have been omitted at this point to comply with the rule against duplication.

[fol. 1429] **PLAINTIFFS' EXHIBIT No. 39e**

Letter from Aluminum Company of America to The Cleveland Trust Company, dated April 26, 1928

(Filed January 27, 1934)

Cleveland, Ohio, April 26, 1928.

The Cleveland Trust Company, Trustee under Declaration of Trust and Agreement between L. P. Mooers et al., dated March 7, 1922, Cleveland, Ohio.

Gentlemen:

We hereby consent to your executing the Amendment to the License Agreement between The Cleveland Trust Company, Trustee, Licensor, and Bohn Aluminum and Brass Corporation, Licensee, dated as of January 1, 1928, but made April 25, 1928, which has been signed by the officers of Bohn Aluminum and Brass Corporation and acknowledged by them under date of April 14, 1928, it being understood that the License Agreement executed on October 12, 1927, as of September 15, 1927, between The Cleveland Trust Company, Trustee, as Licensor, and Bohn Aluminum and Brass Corporation as Licensee, as amended by the said Amendment thereto hereinabove mentioned, is to be carried

out according to the terms thereof and is not to be further changed or modified without our consent.

Very truly yours,

ALUMINUM COMPANY OF AMERICA,
By W. P. King,
Vice-President,

P:L

[fol. 1430] **PLAINTIFFS' EXHIBIT No. 39f**

(Defendants' Exhibit 4-U)

License Agreement between The Cleveland Trust Company and Bohn Aluminum & Brass Corporation

(Filed January 27, 1934)

LICENSE AGREEMENT

THE CLEVELAND TRUST COMPANY TO BOHN ALUMINUM AND BRASS CORPORATION—October 12, 1927

Amended—Jan. 1, 1928.
Amended—Dec. 24, 1929.

This Agreement, made and entered into [as of]* on the 25th day of April, 1928, as of the first day of January 1928 by and between The Cleveland Trust Company, of Cleveland, Ohio, as Trustee under the Declaration of Trust and Agreement between L. P. Mooers et al. and The Cleveland Trust Company, dated March 7, 1922, hereinafter sometimes called the "Licensor," and BOHN ALUMINUM AND BRASS CORPORATION, a Michigan corporation, of Detroit, Michigan, hereinafter sometimes called the "Licensee,"

WITNESSETH:

WHEREAS said The Cleveland Trust Company, as Trustee as aforesaid, and the Bohn Aluminum and Brass Corporation heretofore entered into a certain License Agreement, executed on the 12th day of October, 1927, as of the 15th day of September, 1927, wherein said Trust Company, as said Trustee, is Licensor and the Bohn Aluminum and Brass Corporation is Licensee; and

WHEREAS the parties thereto desire to modify and amend said License Agreement as hereinafter provided;

[*Matter enclosed in brackets, struck out in copy.]

Now, Therefore, it is agreed by and between the parties hereto—each party hereto making its promises and agreements herein contained in consideration of the promises and agreements of the other party herein contained—as follows, to wit:

1. The first two sentences of Article I of the said License Agreement, executed October 12, 1927, as of September 15, 1927, are hereby modified and amended so as to read as follows:

[fol. 1431] The Licensor grants the Licensee the non-exclusive right to make, use and sell a maximum of ten million (10,000,000) pistons and/or piston castings per accounting year (each year beginning January 1st) embodying any of the inventions covered by any of the patents and applications in the above named lists, being all of the patents and applications for patents relating to pistons per se now owned by the Licensor, or to be covered by any continuations and divisions, renewals or reissues of the same, for the full term of each of said patents throughout the United States, the territories and possessions thereof. In case the Licensee makes and sells no so-called controlled type* pistons or castings which are, after sale, modified or to be modified into controlled type pistons, during any accounting year, the maximum of ten million pistons and/or piston castings provided herein for that year is waived and the number of pistons and/or piston castings the licensee may make hereunder for that year is unlimited.

2. Article XX of the said License Agreement, executed October 12, 1927, as of September 15, 1927, is hereby modified and amended so as to read as follows:

Except as otherwise provided in Article I hereof, this license is limited to ten million (10,000,00) pistons and piston castings (together) per accounting year. If the Licensee exceeds that amount in any accounting year without the written consent of the Licensor, and of the Licensor's other licensee (being the exclusive licensee except for this license)

* By controlled type of aluminum piston is meant any piston made in any part of a light metal or of an alloy of a specific gravity less than iron or steel, the expansion and contraction of which is controlled to any extent by any other metal with a coefficient of expansion different from that of the said light metal or alloy.

under the patents held in the Licensor's trust estate, then the Licensor shall charge and collect an additional royalty of ten cents (10¢) per piston for all pistons and piston castings in excess of the maximum ten million (10,000,000), which additional royalty shall be paid by the Licensee to the Licensor on demand, and the Licensor shall diligently proceed by proper proceedings to enjoin and prevent any further such violation of the provisions of this license, or, [fols. 1432-1433] failing so to enjoy and prevent such violation, the Licensor shall cancel this license.

3. Except as hereinabove otherwise specifically provided, the said agreement executed October 12, 1927, as of September 15, 1927, shall remain unchanged and in full force and effect.

In Witness Whereof, the parties hereto have caused this instrument to be executed in duplicate by their respective officers thereunto duly authorized as of the day and year first above written.

Bohn Aluminum and Brass Corporation, by P. A. Markey, Vice-President. S. D. Den Uyl, Ass't Secretary.

The Cleveland Trust Company, Trustee, by R. A. Malm, Vice-President. A. J. Perfler, Assistant Trust Officer.

Approved for execution by the C. T. Co.
A. J. P., Ass't Counsel.

• • • • • • •

[fol. 1434] **PLAINTIFFS' EXHIBIT NO. 39g**

Letter from Aluminum Company of America to The Cleveland Trust Company, dated December 24, 1929

(Filed January 27, 1934)

Cleveland, Ohio, December 24, 1929.

The Cleveland Trust Company, Trustee under Declaration of Trust and Agreement between L. P. Mooers et al., dated March 7, 1922, Cleveland, Ohio.

GENTLEMEN:

We hereby consent to your licensing Bohn Aluminum & Brass Corporation to make, use and sell a maximum of Eleven Million (11,000,000) pistons and/or piston castings

during the accounting year beginning January 1, 1929, and ending December 31, 1929, under the License Agreement dated September 15, 1927, and actually executed October 12, 1927, between you as Licensor and Bohn Aluminum and Brass Corporation as Licensee, as amended by Agreement made on April 25, 1928, as of January 1, 1928, (being One Million (1,000,000) pistons and/or piston castings more than provided in said Agreement as so amended) it being understood that all other terms and provisions of said License Agreement as amended on April 25, 1928, shall be and remain in full force and effect and that the said One Million (1,000,000) increase in the number of licensed pistons and/or piston castings applies to said accounting year 1929 only, and that the maximum number of licensed pistons and/or piston castings for each accounting year subsequent to the said accounting year 1929 shall be Ten Million (10,000,000), and that the said license Agreement executed on October 12, 1927, as of September 15, 1927, between you as Licensor and Bohn Aluminum & Brass Corporation as Licensee, as amended by the said Agreement made April 25, 1928, as of January 1, 1928, except as to the said increase of One Million (1,000,000) in the number of pistons and/or piston castings licensed for the year 1929, is to be carried out according to the terms thereof and is not to be further changed or modified without our consent.

Very truly yours, Aluminum Company of America,
by W. P. King, Vice-President.

[fol. 1435] **PLAINTIFFS' EXHIBIT NO. 40**

Agreement between Bohn Aluminum & Brass Corporation and The Cleveland Trust Company, dated October 12, 1927, Under Schmiedeknecht Patent No. 1,256,265

[Offered also as Defendants' Exhibit 4-V]

(Filed September 27, 1934)

Agreement

This Agreement made and entered into this 12th day of October, 1927, by and between the Bohn Aluminum & Brass Corporation, a Michigan corporation, of Detroit, Michigan, hereinafter sometimes called the "Bohn Corporation," and The Cleveland Trust Company, an Ohio corporation, of

Cleveland, Ohio, as Trustee under the Declaration of Trust and Agreement between L. P. Mooers, et al., dated March 7, 1922, hereinafter sometimes called the "Trust Company,"

Witnesseth:

Whereas the Bohn Aluminum & Brass Corporation owns the entire right, title and interest in and to United States Letters Patent No. 1,256,265, issued to Victor E. Schmiedeknecht on February 12, 1918, and an application for United States Letters Patent, Serial No. 201650, filed in the name of Frank J. Kent, both of which are for certain inventions relating to pistons per se;* and

Whereas the Bohn Corporation is a large manufacturer of aluminum pistons; and

Whereas the Trust Company, as Trustee as aforesaid, owns various patents relating to pistons per se; and

Whereas the Trust Company, as Trustee as aforesaid, desires to obtain the patent and the application for patent above named and to have the said Bohn Corporation accept a license under the patents in said trust estate, relating to pistons per se, by the terms of which said Bohn Corporation recognizes said patents and agrees to pay one cent (1¢) per piston royalty upon the pistons and/or castings therefor, made, used and/or sold by it, which are covered by said patents, or any of them; and

[fol. 1436] Whereas said Bohn Corporation is willing to sell and assign to said Trust Company, as Trustee as aforesaid, the patent and the application for patent above named and to accept a license from said Trust Company upon the terms and conditions hereinafter provided for;

Now, Therefore, it is agreed by and between the parties hereto, each party hereto making its promises and agreements herein contained in consideration of the promises and agreements of the other party herein contained—each of said promises and undertakings being material and dependent—as follows, to wit:

---

* Pistons per se means pistons whose patentability depends upon physical, structural characteristics of the piston and not upon the character of the material in the piston or the molds, machines or the processes by which the piston is made.

1. Said Bohn Corporation agrees to sell, assign, transfer and set over and hereby sells, assigns, transfers and sets over to The Cleveland Trust Company, as Trustee under the Declaration of Trust and Agreement between L. P. Mooers, et al., dated March 7, 1922, the entire right, title and interest in and to the United States Letters Patent No. 1,256,265 and in and to the application for United States Letters Patent, Serial No. 201650, named above, together with the right to sue for past infringements of the said patent or of any patent issuing from such application, and to collect damages and profits arising out of such infringement and apply the same to the benefit of The Cleveland Trust Company, as Trustee.

2. The Trust Company hereby agrees forthwith upon the execution of this agreement to issue and deliver to said Bohn Corporation or its nominees or assigns, fully paid, One Thousand Five Hundred and Twelve and One-half (1512½) shares of the piston patent estate created by the said Trust Agreement dated March 7, 1922, between the Trust Company and L. P. Mooers, et al., there being issued and outstanding at the date of the execution of this agreement Three Thousand (3000) of such shares, exclusive of the One Thousand Five Hundred and Twelve and One-half (1512½) shares so to be issued to said Bohn Corporation or its nominees or assigns.

3. Said Trust Company and said Bohn Corporation agree, forthwith upon the execution hereof, to execute the license agreement, a copy of which is hereto attached.

[fol. 1437] In Witness Whereof, the parties hereto have set their hands and seals to duplicates hereof the day and year first above written.

Bohn Aluminum & Brass Corporation, by P. A. Markey, Vice-President.

Attest: A. P. Lauer, Secretary. (Corporate Seal.)

The Cleveland Trust Company, Trustee, by R. A. Malm, Vice-President.

Attest: A. J. Perfler, Assistant Trust Officer. (Corporate Seal.)

Approved for Execution by The C. T. Co.
R. T. S., Counsel.

• • • • • • •

[fol. 1438] **PLAINTIFFS' EXHIBIT NO. 42a**

Franklin Weekly Engineering Report, for the Week Ending October 5, 1918

(Filed January 27, 1934)

Mechanical Laboratory

ML4U—10000 Mile Wear Test

This engine has been built up again and the test has proceeded 8500 miles and will continue on to completion at intervals between our Government work when men are available for attendance.

ML20M—Piston Endurance Runs

Special Long patented aluminum composition pistons. Weight including wrist pin, 2 pressure proof jr. rings, and one Inland top ring—1.225#.

A full set of these pistons were installed in a regular series nine engine and fitted to the cylinders such that the straight skirt clearance from just below the wrist pin down was from .002″ to .003″. The lands were all .025″ clearance just as they were received. It may be noted that there was four oil holes in the top of each wrist pin boss and also eight oil holes just below the lower ring. The engine, thus built up, was placed on dynamometer #2, fitted with tinware as in a car and the test was carried out according to the method described in ML20M so that results are comparable with those in that report.

In this last test the pistons were installed in such a way that the ribless side was toward the exhaust side of the engine.

Result; After 10 minutes running, pistons #4 and 6 seized on the exhaust (ribless) side of the piston.

This test will be repeated with the same style of pistons having a straight skirt clearance of .005″ and having the ribless side of piston toward the suction side of the engine. To build up the motor in this way and not be obliged to cut away the rib in order to make room for the connecting rod cap screw, the connecting rods will be turned through 180° and thus have their cap screw on the suction side.

[fol. 1439] LONG PATENT PISTON—PURCHASE ORDER #35509 —TYPE "B."

250 of these from pattern X-13 are on order at Walker M. Levett Co. To date fourteen of these have been duly received. We are advised that shipment has been made of an additional fifty castings.

Type "A."

One hundred and sixty castings have been received of our original order calling for 350 castings from our type "A" pattern #P-2912. After receiving 65 castings we recalled pattern back from Walker-Levett Co. This to enable bringing pattern up to latest blue print. Upon completion same will be returned them for the completion of our order.

Shipments.

6 Long patent pistons type "A" equipped with rings and wrist pins have been forwarded to our Detroit dealer, Mr. W. J. Doughty.

PLAINTIFFS' EXHIBIT NO. 42b

Franklin Weekly Engineering Report, for the Week Ending July 20, 1918

(Filed January 27, 1934)

ML20N—Piston Endurance Runs

A regular series nine engine was equipped as follows; (a) New production gauge cylinders, (b) #1 cylinder was equipped with Long patent piston with no rib on suction side, (c) other pistons were regular production magnalite having a clearance of .013" for a distance of 1⅛" below the bottom ring and then tapering off to .003" at the skirt.

The engine was then placed on dynamometer #1 and motored in for three hours at 1000 R.P.M. Jackets were installed and a piston endurance run was made under the conditions described in report ML20M.

[fol. 1440] The run proceeded for 19 minutes when the power failed, thus taking the load off the engine. The horsepower had not dropped sufficient to indicate a "set up."

After allowing the engine to cool off to room temperature a second trial was made and this time the run proceeded for 19 minutes when the motor set up suddenly. #1 special piston set up so tightly and there was a large hole in the top of the piston. Two of the other pistons seized slightly on the exhaust side near the skirt.

PLAINTIFFS' EXHIBIT NO. 42c

Franklin Weekly Engineering Report, for the Week Ending May 3, 1919

(Filed January 27, 1934)

MECHANICAL LABORATORY

ML 4X 10000 Mile Wear Test.

The Long Patent pistons with floating wrist pins and straight .003" clearance did not show excessive wear but one piston broke at 75000 miles and the retaining buttons in wrist pin holes had all worked loose, wearing down both the button and the wrist pin hole. One button was broken and one had the horizontal retaining lugs entirely worn away.

The electric welded cylinder did not show any excessive wear nor evidence of failing where it had been welded. This sample was returned to Mr. Babcock.

Practically no carbon was found in spark plug holes where the threads had been undercut.

The valve lifters with same grinding area as S-5 were in good condition after a total of 15000 miles. Some of the lifters showed scarcely any wear from the action of the cams and none showed excessive wear on the lifting surface. Further work will be done along this line. See tables for wear on wrist pins and wrist pin holes in pistons and connecting rods.

(Here follow 2 photolithographs, side folios 1441-1442–1443-1444)

ML4X

PISTON WEAR IN THOUSANDTHS OF AN INCH AFTER 10000 MILES

LONG PATENT PISTONS (A) WITH FLOATING WRIST PINS

No			TOP	BETWEEN 1ST RING	BELOW 3RD RING	BELOW WRIST PIN	SKIRT
1	a		No 1 Piston broke at 7500 miles				
	b						
2	a		1	0	7	4	4
	b		2	.5	6	4	2
3	a		0	0	5	4	3
	b		1	0	3.5	2.5	2.5
4	a		0	0	5	3.5	3.5
	b		3.5	1.5	2.5	.5	1.5
5	a		1	0	6	4	4
	b		4.5	1.5	6	3.5	3
6	a		4	3	9	3.5	4
	b		1	0	1.5	3	4
AVERAGES	a		1.2	.6	6.4	3.8	3.7
	b		2.4	.7	3.9	2.7	2.8

BLANK PAGE

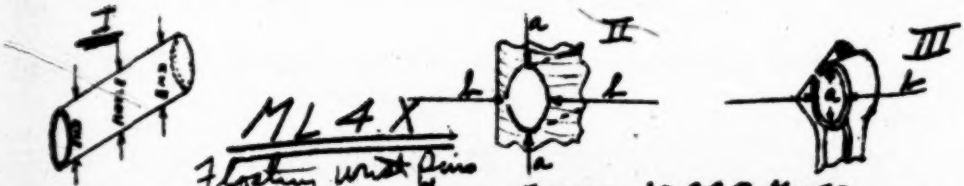

ML 4X

Floating Wrist Pins

WRIST PIN WEAR IN THOUSANDTHS AFTER 10000 MILES

CYL NO.	END	MIDDLE	END
1	Piston Broke at 7500 miles		
2	1	0	1
3	2	.5	2
4	1	0	1
5	1	0	.75
6	1	0	1.5
AVERAGE	1.2	.1	1.25

WEAR IN THOUSANDTHS OF WRIST PIN HOLES IN PISTONS AFTER 10000 MI.

CYL NO.	FRONT "a"	FRONT "b"	REAR "a"	REAR "b"
1				
2	3.5	1.	3.5	1
3	2	1	2	1
4	3	2	2.5	2
5	3	1	3	1
6	2	1.5	2	1.5
AVERAGE	2.7	1.3	2.6	1.3

WEAR IN THOUSANDTHS OF WRIST PIN HOLES IN CONNECTING RODS

CYL NO.	"a" IN LINE WITH ℄ OF PISTON	"b" AT RIGHT ANGLE WITH ℄ ROD
1		
2	0	0
3	.5	0
4	0	0
5	.5	0
6	1	.5
AVERAGE	.4	.1

1443-1444

Tightly Bound

BLANK PAGE

[fol. 1445] **PLAINTIFFS' EXHIBIT NO. 44**

Letter to E. C. Long from Franklin Manufacturing Company, dated May 9, 1918

(Filed January 27, 1934.)

H. H. Franklin Manufacturing Company, Syracuse, N. Y., U. S. A.

May 9, 1918.

Franklin Motor Cars

Mr. E. C. Long, Hannibal, Mo.

DEAR SIR:

Mr. Franklin has referred your letter of May 6 and preceding one to the writer.

We shall be glad to have you send us one of the sample pistons which you speak of. If more are needed we can arrange with you to supply them or we could have some made up here.

We shall await with considerable interest the arrival of this sample.

Very truly yours, H. H. Franklin Manufacturing Co. R. Murphy, Chief Engineer.

RM/C

[fols. 1446-1450] **PLAINTIFFS' EXHIBIT NO. 45**

Letter to E. C. Long from Franklin Automobile Company, dated April 17, 1918

(Filed January 27, 1934.)

Franklin Automobile Company, Syracuse, N. Y., U. S. A.

Distributors of Franklin Motor Cars

April 17, 1918.

Mr. E. C. Long, Hannibal, Mo.

MY DEAR SIR:

I have your letter of April 13 and note with interest that you have a patent piston which shows up well in test. My judgment is that you should arrange to have the piston

tested in some laboratory. There are numerous places where you could have the test made, or we would make it for you. Before going ahead we would want full details of the piston or better still a sample of the piston itself. If the piston is all that you think you could put it on the market or you could license its use by manufacturers.

Yours very truly, H. H. Franklin, President.

(Here follows 1 photolithograph, side folio 1451-1452)

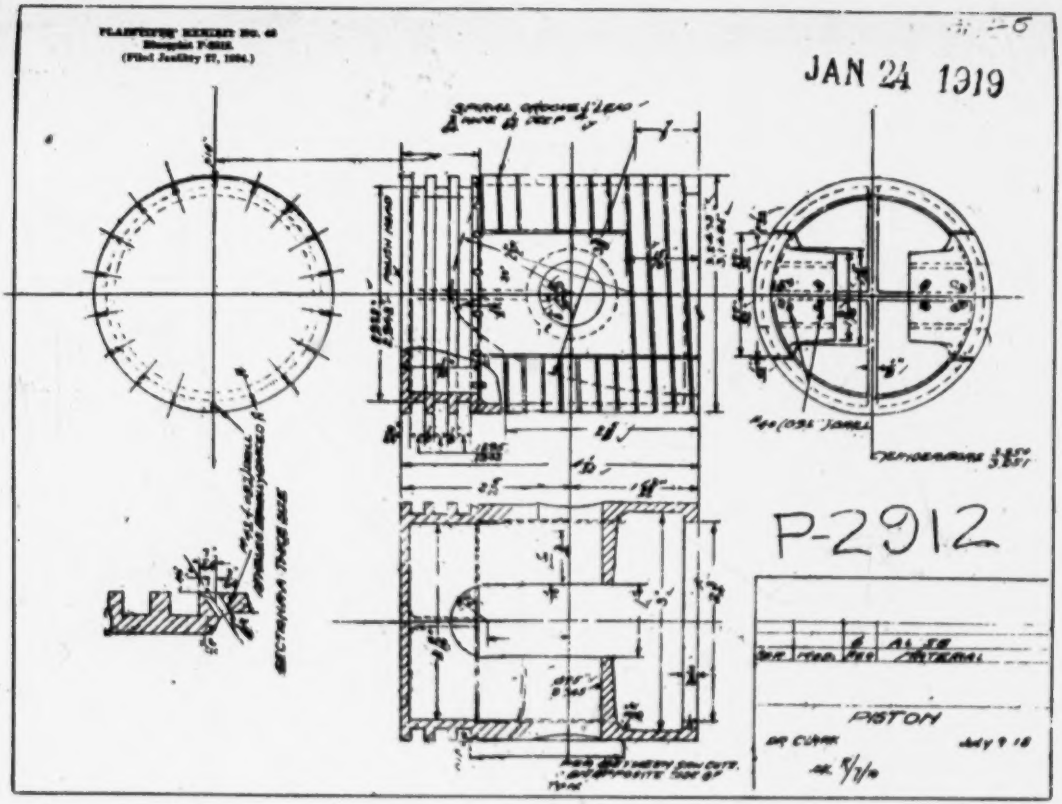
PLAINTIFFS' EXHIBIT No. 46
(Filed January 27, 1924.)
JAN 24 1919
P-2912
PISTON
1451-1452

6424

BLANK PAGE

[fols. 1453-1532] **PLAINTIFFS' EXHIBIT NO. 66**

Patent Office List of Applications of Long.

(Filed January 27, 1934.)

(Attorney's Room, Jun 29 1925 U. S. Patent Office.)

(Docket Division Jul 2 1925 U. S. Patent Office)

To the Hon. Commissioner of Patents:

Please permit the H. H. Franklin Manufacturing Company of Syracuse, New York, or its authorized agent or attorney to inspect the files and make copies of the papers therein of each of my pending applications as follows:

Serial Number	Title	Filed
231,786	Case "A"	May, 1919
281,175	Case "D"	March, 1919
304,283	Case "E"	June 14, 1919
317,273	Case "F"	August 13, 1919
339,892	Case "G"	November 22, 1919
375,673	Case "H"	April 22, 1920
437,690	Case "I"	January 17, 1921
432,719	Case "J"	December 23, 1920
522,974	Case "L"	December 17, 1921
602,660	Case "M"	November 22, 1922
624,463	Case "N"	March 12, 1923

Signed at Detroit, State of Michigan, this 13th day of April, 1925.

Long Piston Corporation, Elmer C. Long, President.
Elmer C. Long (Seal)

Witness: Fred G. White.

* * * * * * *

[fols. 1533-1536] **PLAINTIFFS' EXHIBIT NO. 67-B**

Opinion of Examiner in Interference No. 49,569

(Filed January 27, 1934)

Final Hearing March 23, 1928.

In the United States Patent Office

Patent Interference No. 49,569

Hartog v. Long v. Gulick

Pistons

Application of Stephen D. Hartog filed February 16, 1920, No. 359,137.

Applications of Elmer C. Long filed August 13, 1919, No. 317,273; filed March 7, 1919, No. 281,175.

Application of Edward J. Gulick filed November 30, 1917, No. 204,661.

• • • • • • •

[fols. 1537-1584] By agreement of the parties the opinion in this Interference is not included in the Record except for the following quotation taken therefrom:

Long's entire case for priority of conception is in substance based upon the unaided memory of several witnesses speaking about ten years after the event and speaking then with the degree of uncertainty that is inevitable under such circumstances. Long had fifteen to twenty applications for split-skirt pistons on file at the time he was testifying, and had built a great many different forms for which no application was made. (Record, p. 42.) It was thought that no one after a period of many years would be able to recall the particular year when he saw a specific structure of any particular kind of piston from a large number of similar pistons unless there was some special facts that had impressed upon the mind of the witness this particular year and structure. The Long case for priority is fatally defective as to date and identity of the invention of count 2.

There are no facts upon which the examiner of interferences would rule that the Gulick application fails to disclose the inventions defined by the two counts. There is no ade-

quate proof that Long had conceived the invention of either of these counts prior to Gulick's filing date. It is, therefore, held that Gulick is the first inventor of the subject matter of both counts.

Priority of invention of the subject matter in issue is hereby awarded to Edward J. Gulick, the senior party.

Limit of appeal: August 2, 1928.

H. I. Houston, Examiner of Interferences.

July 2, 1928.

(Here follows 1 photolithograph side folio 1585-1586.)

DEFTS' EXHIBIT A
11-12-26. M.J.C.

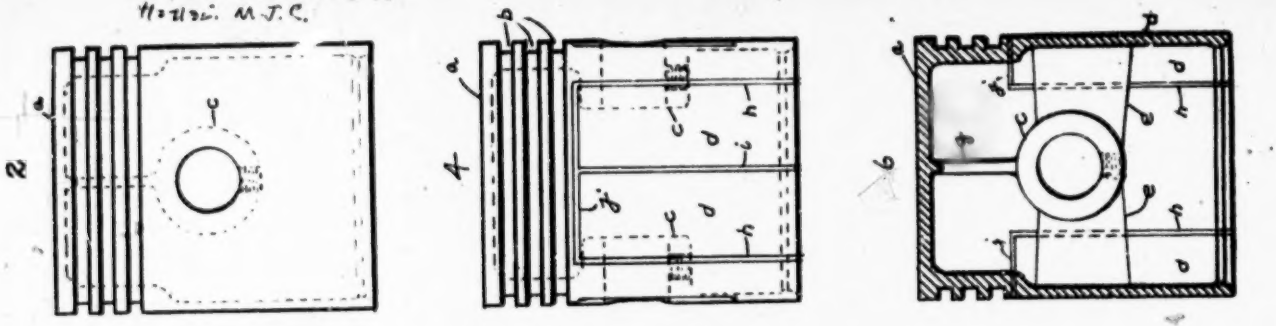

DEFENDANTS' EXHIBIT A.
Drawing produced by Venner of Long 1916 Piston.
(Filed January 9, 1933.)

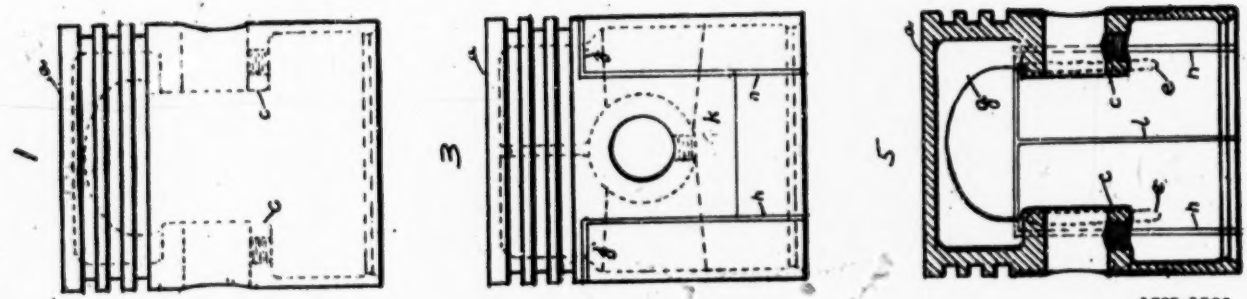

1585-1586

646A

BLANK PAGE

[fol. 1587] **DEFENDANTS' EXHIBIT C**

Two Paragraphs from Service Department Bulletin, Sheet No. 262, April 8, 1920, of Franklin Automobile Company, entitled "Long Type Pistons"

(Filed January 9, 1933)

4/27/32 M. J. C.

Service Department Bulletin

Sheet No. 262

Long Type Pistons

After April 15 the Service Department will be able to furnish Long Type Pistons in the standard size. These are straight pistons with two to three thousandths clearance. Their weight is approximately the same as the standard piston.

While these pistons have not proved satisfactory in production, we find that they work out very well when used in slightly worn cylinders; cylinders that are not worn more than .005 to .006 inch. If the cylinders are worn more than this they should be rebored. Long Type Pistons will be sold at the same price as the standard piston; viz, $8.50 list, complete with wrist pins, and rings, subject to the regular discount. Oversize, Long Type pistons cannot be furnished.

FRANKLIN AUTOMOBILE COMPANY.

File these sheets.
April 8, 1920.

[fol. 1588] **DEFENDANTS' EXHIBIT D**

Seven Paragraphs from Service Department Bulletin, Sheet No. 289, November 11, 1920, of Franklin Automobile Company, entitled "New Design for Series Nine"

(Filed January 9, 1933)

Service Department Bulletin

Sheet No. 289

New Design for Series Nine

The distinct advantage as a material for pistons which an aluminum alloy with its very light weight and great ability to throw off heat has over cast iron, is conceded by all automobile engineers.

All of the Series 9 cars have been equipped with pistons made from this material and are giving satisfactory service. The Franklin design of these pistons as used in the past has been of the most up-to-date. The one disadvantage connected with their use has been the clearance which has been necessary between the pistons and walls of the cylinders.

Aluminum expands with the application of heat much more than cast iron, and for that reason in the past our pistons have required much more clearance to take care of this feature. This excessive clearance, particularly with a cold motor, has a tendency to make it noisy, to say nothing of affording an opportunity for the escape of gasoline past the rings and into the base, and also allowing an excess amount of oil to work up beyond the rings.

The Franklin engineers, however, realizing the particularly desirable features of the aluminum alloy piston have for the past three years been conducting exhaustive experiments with a view of securing a design such that the undesirable features would be eliminated. That has been accomplished. A new design has been perfected whereby we are now enabled to fit our aluminum pistons with two to three-thousandths clearance. This is the same amount of clearance as would be required for cast iron pistons in Series 9 motors. All motors going through production at this time are being fitted with this new piston known as the Long Piston and a more quiet motor with slightly increased ability is the result.

Fully realizing the fact that with the installation of this Long Piston in Series 9 motors already in service the same improved operation may be obtained to the present owners, [fol. 1589] the Service Department has made the necessary preparations and is in position to supply this same piston in standard size, and can furnish it to you in the .015″ and .030″ oversize to take care of the overhaul work.

This new piston is a distinct improvement. We do not contemplate replacing the earlier type pistons in motors already out, except at owners' expense. Sell it to your owners with that idea in mind.

The price is $6.50 list for piston with wrist pin only.

FRANKLIN AUTOMOBILE COMPANY.

File these sheets.
November 11, 1920.

DEFENDANTS' EXHIBIT H

Article from Franklin Service Bulletin No. 348, April 18, 1932, of Franklin Automobile Company, entitled "The Oval Type Piston"

(Filed January 27, 1934)

Franklin Service Bulletin

"To Reduce the Cost and Improve the Quality of Service"

Franklin Automobile Company, Syracuse, N. Y.

No. 348 April 18, 1922

The Oval Type Piston

A piston which is ground oval in shape and for this reason known as the oval type piston has been going through production in small quantities since last Summer. The results being obtained with this piston are so successful that it may be adopted for standard production. In order to best understand what the oval type piston is it is necessary to [fol. 1590] know some of its specifications:

	Oval Type	Long Type
Length of piston	4"	4- 1/16"
Length of piston skirt	2-13/16"	2-31/32"
Length of piston above wrist pin	2⅜"	2-15/32"
Circumference of piston	oval	round
Shape of piston	tapered	straight
Clearance at the diameter perpendicular to wrist pin		
At bottom of skirt	.003	.005
At top of skirt	.005	.005
Clearance in line with wrist pin		
At bottom of skirt	.012	.005
At top of skirt	.014	.005

The oval type piston has several advantages over the straight and round type of piston. Principal among them are:

1. The oval piston has a clearance of only .003 to .005 of an inch over a distance of 1¼ inches on each side of the piston at the diameter perpendicular to the wrist pin. This gives the oval piston the advantage of a close fit, but the tendency for tightening of the piston of the wrist pin due

to friction between the cylinder and piston is avoided because of the much greater clearance at all other points.

2. The increased size of the combustion chamber due to the oval piston being 3/32 of an inch shorter from the center line of the wrist pin to the top of the piston reduces the tendency for pinging.

[fol. 1591] **DEFENDANTS' EXHIBIT I**

Article from Page 1, Franklin Service Bulletin No. 369, Feb. 20, 1923, of Franklin Automobile Company, Entitled Piston and Wrist Pin Knocks, and Drawing on Page 2, Entitled "Drill Jig for Extra Oil Holes in Piston"

(Filed January 3, 1933)

4/27/32 M. J. C.

Franklin Service Bulletin

"To Reduce the Cost and Improve the Quality of Service"

Franklin Automobile Company, Syracuse, N. Y.

Piston and Wrist Pin Knocks

For those dealers who have trouble in distinguishing a piston slap from a knock made by a loose wrist pin, the following descriptions will be helpful.

Piston Slaps.—There are two characteristic piston noises, one known as a "slap" and the other as a "ping." A slap is more noticeable when the engine is cold and tends to disappear when the engine is hot. A "ping" does not appear until the engine is hot. A slap gives a much sharper noise than a ping, and since a slap usually appears in but one cylinder, it is of less frequency than a ping. A constant application of power at a moderate speed, such as going up a slight incline at 18 or 20 miles an hour with a cool engine, will bring out a slap more distinctly than anything else.

Wrist Pin Knocks.—Worn wrist pins cause a slight but distinct double knock that is heard only at low speed, and which becomes more distinct as the engine warms up. It is not so sharp as a piston slap and can be easily heard when the engine is throttled down to a slow idling speed. A wrist pin knock from a particular cylinder disappears if the compression is relieved by removing the spark plug.

(Here follow 2 photolithographs, side folios 1592—1593-1594)

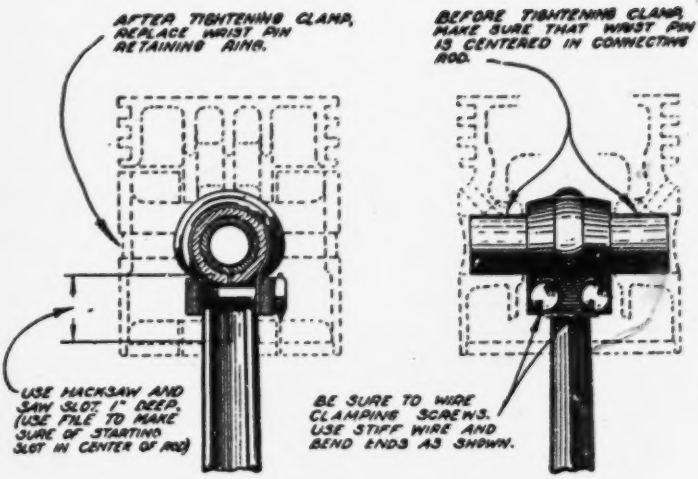

INSTALLATION OF WRIST PIN CLAMP.

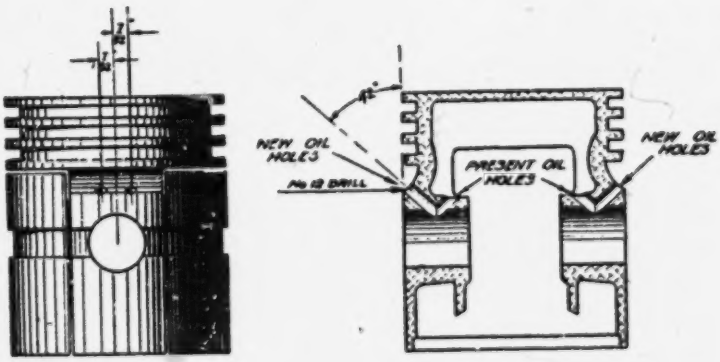

LOCATION OF NEW OIL HOLES IN SERIES 10 PISTON.

BLANK PAGE

Defendants' Exhibit I, Re Piston and Wrist Pin Knocks

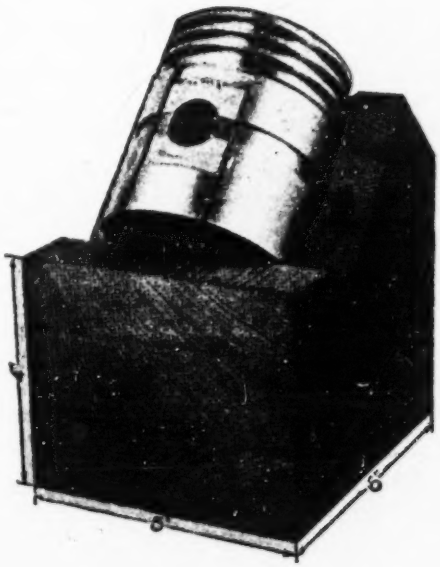

BLANK PAGE

[fol. 1595] **DEFENDANTS' EXHIBIT J**

Forfeited and Abandoned Application of William M. Venner for Improvement in Pistons, filed April 12, 1920, Serial Number 373,340

(Filed January 27, 1934)

390

DEPARTMENT OF COMMERCE

UNITED STATES PATENT OFFICE

To all persons to whom these presents shall come, Greeting:

This is to Certify that the annexed is a true copy from the records of this office of the Petition, Specification, Oath and Drawing, as originally filed, in the matter of the Forfeited and Abandoned Application of William M. Venner, filed April 12, 1920, Serial Number 373,340, for Improvement in Pistons.

In Testimony Whereof I have hereunto set my hand and caused the seal of the Patent Office to be affixed, at the City of Washington, this sixteenth day of September, in the year of our Lord one thousand nine hundred and thirty-one and of the Independence of the United States of America the one hundred and fifty-sixth.

THOMAS E. ROBERTSON,
Commissioner of Patents.

(Seal.)

Attest:
D. E. WILSON,
Chief of Division.

(Mail Room Apr 12 1920 U. S. Patent Office)

(U. S. I. R. Documentary Stamp 25 Cents)

Application for U. S. Letters Patent

PETITION.

To the Commissioner of Patents:

Your petitioner, William M. Venner, a citizen of the United States, residing at South Bend, in the County of St. Joseph and State of Indiana, and whose post-office address is 316 Hamden Court, in said city, prays that Letters Pat-

[fol. 1596] ent may be granted to him for the improvement in Pistons set forth in the annexed Specification.

And I hereby appoint George J. Oltsch, 711-12 Studebaker Building, South Bend, Indiana, U. S. A., Register No. 9371, Attorney, with full power of substitution and revocation, to prosecute this application, to make alterations and amendments therein, to sign my name to the drawings, to receive the Letters Patent, and to transact all business in the United States Patent Office connected therewith.

Signed at South Bend, in the county of St. Joseph and State of Indiana, this 8th day of April, 1920.

☞ (Sign here
First name in Full.)

WILLIAM M. VENNER.

SPECIFICATION.

To All Whom it May Concern:

Be it Known, That I, William M. Venner, a citizen of the United States, residing at South Bend, in the County of St. Joseph, and State of Indiana, have invented certain new and useful inprovements in Pistons, of which the following is a specification:

373340—1

The invention relates to pistons and has for its object to provide a piston especially adapted for use in air cooled internal combustion engines, and to provide a piston so constructed that the use of aluminum and other light metals may be accomplished, thereby giving lightness of reciprocating parts, which metals have a greater relative degree of expansibility than the cylinder casings under the same temperature. Pistons of aluminum and alloys on account of their relative greater degrees of expansibility than the cylinder casings tend to seize the cylinders under high temperatures unless considerable clearance is provided and too much clearance is impractical, as the pistons will slap under low temperature, therefore it is the primary object of the invention to provide a skirt for the piston formed in sections, which sections are supported by downwardly extending webs, which webs are spaced apart at their bottoms and so constructed that they will have a relatively narrow width in proportion to their length so that the expansion of the webs will be more in the direction of their length than width. The lengthwise expansion being un-

[fol. 1597] limited thereby the web supported skirt sections will not seize the cylinder.

With the above and other objects in view the invention resides in the combination and arrangement of parts as hereinafter set forth, shown in the drawings, described and claimed, it being understood that changes in the precise embodiment of the invention may be made within

2 373340—2

the scope of what is claimed without departing from the spirit of the invention.

In the drawings:—

Fig. 1 is a side elevation of the piston.

Figure 2 is a vertical sectional view taken on line 2—2 of Figure 1.

Figure 3 is a horizontal sectional view taken on line 3—3 of Figure 2.

Referring to the drawings, the numeral 1 designates a piston and 2 the head thereof. The head 2 is provided with a plurality of piston ring grooves 3 for the reception of piston rings of any conventional form. The piston is made from aluminum or any other light metals, or from any metal which has a greater expansibility than the cylinders in which it may be used. Pistons of this character in the past, on account of their greater expansibility than the cylinders [on]* in which they are used have been found, when subjected to extreme temperatures, to bind or seize the bore of the cylinders, and where sufficient clearance has been allowed in the skirt of the piston under low temperatures the piston slaps. To overcome the above object the skirt 4 of the piston is slit as at 5 and 6 so as to form skirt sections 7, which sections form a major area entirely separated from the remaining wall sections 8 of the skirt 4. The adjacent edges of the skirt sections so formed being spaced from each other so as to allow independent movement when the piston is subjected to high or low temperatures.

The head 2 of the piston is provided with a chamber

3 373340—3

9 and depending downwardly from said chamber and integrally connected to the head 2 are webs 11 and 12. Webs

[*Matter enclosed in brackets struck out in copy.]

11 extend downwardly and are integrally connected to the skirt sections 8 and merge into bearings 13 for the wrist pin. The webs 12 extend downwardly and outwardly and are of greater length than width and have integrally con- [fol. 1598] nected to their ends the skirt sections 7. It will be seen that by having the web sections 12, independent of each other and of greater length than width, that when the piston is subjected to high temperatures the expansion of the webs will be more in the direction of their length than in the direction of their width and that the length-wise expansion may be of any degree without causing the skirt to seize the cylinder. It will also be seen that by having the major area of the skirt in the skirt sections 7 which are entirely separated from the remaining skirt portions 8 and the major area sections 7 being supported entirely by the elongated webs 12 integrally formed with the head 2 of the piston, that the expansion will be longitudinally and not laterally, thereby maintaining a snug fit of the piston as a whole during high or low temperatures so as to overcome the difficulty at present experienced where pistons are made of aluminum or other metals, which have a greater expansibility than the cylinder. By providing supporting webs for the skirt sections, which webs are of greater length than width so that expansion of the webs will be lengthwise, the difficulty heretofore experienced in split skirts for pistons is obviated.

The invention having been set forth what is claimed as new and useful is:—

1 The combination with a piston head, of a skirt therefor, said skirt being formed from independent sections, and webs carried by the piston head and supporting the independent sections, said webs being of greater length than width, thereby insuring longitudinal expansion and contraction.

2 The combination with a piston head, of a skirt therefor, said skirt being formed in sections, some of said sections being carried by the piston head, the other sections being independent, the independent sections being supported by webs carried by the piston head, said webs being of

greater length than width so that they will expand and contract longitudinally.

3 The combination with a piston head, of a skirt therefor, said skirt being formed in sections, some of said sections being integrally connected to the piston head, the other sections being independent of the piston head, and downwardly extending webs carried by the piston head and supporting the independent sections, said webs being of greater length than width, thereby causing longitudinal ex- [fol. 1599] pansion of the webs when subjected to heat.

4 The combination with a piston head, of a skirt therefor, said skirt being formed in sections, some of said sections being carried by and integrally joined to the piston head, the other sections being independent of the piston head, downwardly and outwardly extending webs carried by the piston head and supporting the independent sections, said webs being of greater length than width so as to insure longitudinal expansion and contraction.

373340—5

5 The combination with a piston head, of a skirt therefor, said skirt being formed in sections, some of said sections being carried by the piston head, the other sections being independently supported in relation to the piston head, webs carried by the piston head and supporting the independent sections, said independent sections comprising the major area of the skirt, said webs being of greater length than width thereby insuring longitudinal expansion and contraction.

6 The combination with the head of a piston, of a skirt therefor, said skirt being formed in sections, some of said sections being integrally connected to the piston head, the other sections being independent of the piston head, said independent sections comprising the major area of the skirt, and downwardly extending independent webs for supporting the independent sections, said webs being of greater length than width, thereby insuring longitudinal expansion and contraction.

373340—6

In Testimony Whereof I affix my signature.

William M. Venner.

(Sign here First name in Full.)

OATH

State of Indiana,
County of St. Joseph, ss:

William M. Venner, the above-named petitioner, being duly sworn, deposes and says that he is a citizen of (1) the United States, and resident of South Bend, Indiana; that he verily believes himself to be the original, first, and (2) sole inventor of the improvements in Pistons described and [fol. 1600] claimed in the annexed specification; that he does not know and does not believe that the same was ever known or used before his invention or discovery thereof, or patented or described in any printed publication in any country before his invention or discovery thereof, or more than two years prior to this application, or in public use or on sale in the United States for more than two years prior to this application; that said invention has not been patented in any country foreign to the United States on an application filed by him or his legal representatives or assigns more than twelve months prior to this application; and that no application for patent on said improvement has been filed by him or his representatives or assigns in any country foreign to the United States.

☞ (Sign here
First name in Full.) William M. Venner.

Sworn to and subscribed before me this **8th** day of April, 1920.

Orlo R. Deahl, (Official Signature), Notary Public, (Official Character). (Notarial Seal)

[Seal here, to be impressed in paper.]
My commission expires **Mar. 30, 1921.**

☞ Note.—Acknowledgment should be made before a Notary Public, *who must affix his seal.* If executed before an officer not provided with a seal, the Certificate of the Judge or Clerk of County Court must be affixed, showing official character of such officer.

373340—7

(Here follow 2 photolithographs, side folios 1601-1602—1603-1604)

293/62

Fig. 1.

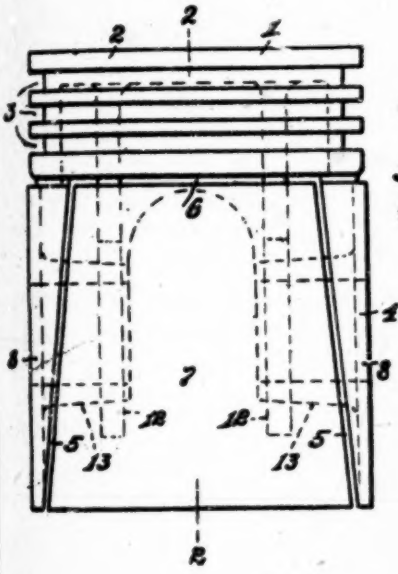

Fig. 2.

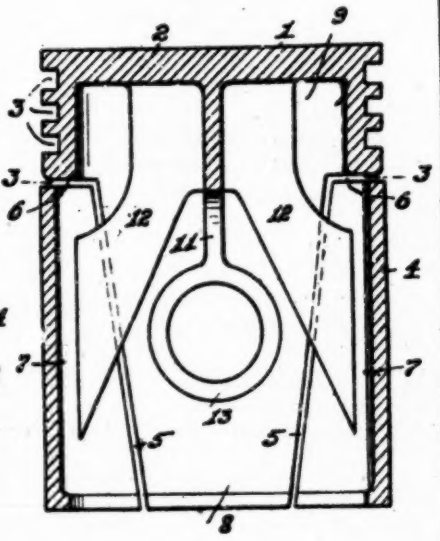

Fig. 3.

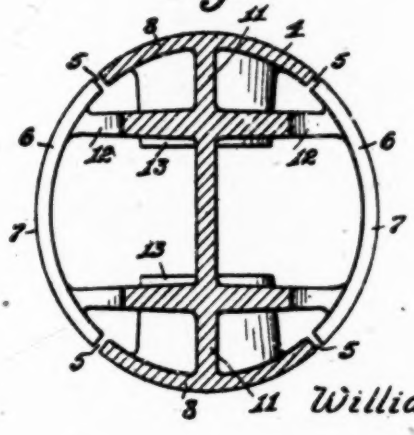

William M. Venner
INVENTOR

By George F. Otto
ATTORNEY.

BLANK PAGE

DEFTS' EXHIBIT K
4/27/32 M.J.C.

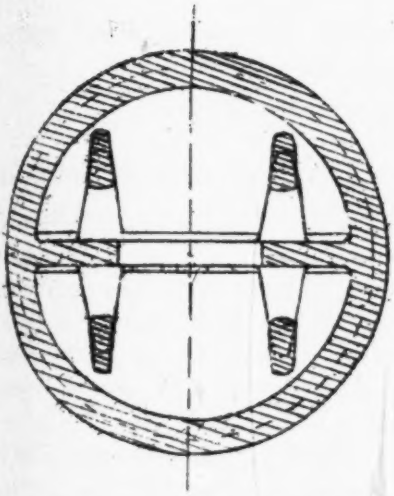

DEFENDANTS' EXHIBIT K.
Venner Drawing, February 16, 1920.
(Filed January 27, 1934.)

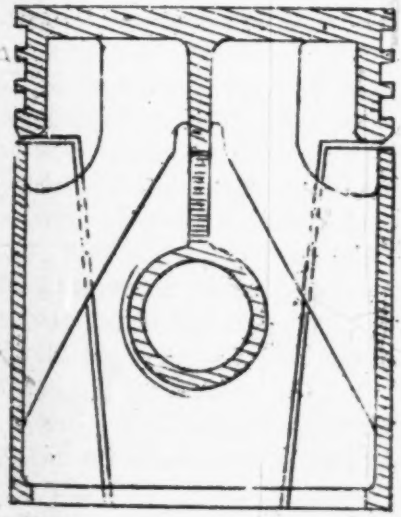

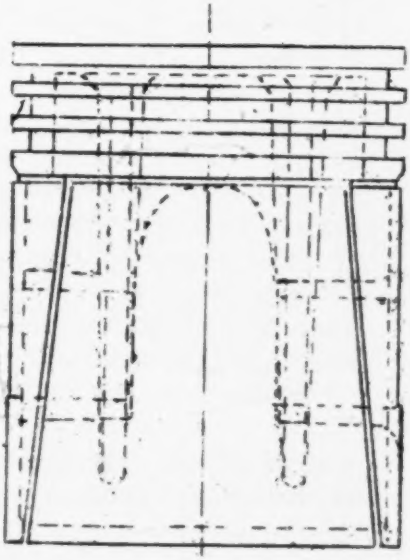

W.M. VENNER
SOUTH BEND, IND.

BLANK PAGE

DEFENDANTS' EXHIBIT T-6
Tracing produced by Chadwick of Long Pistons for
an Essex Car.
(Filed January 27, 1926.)

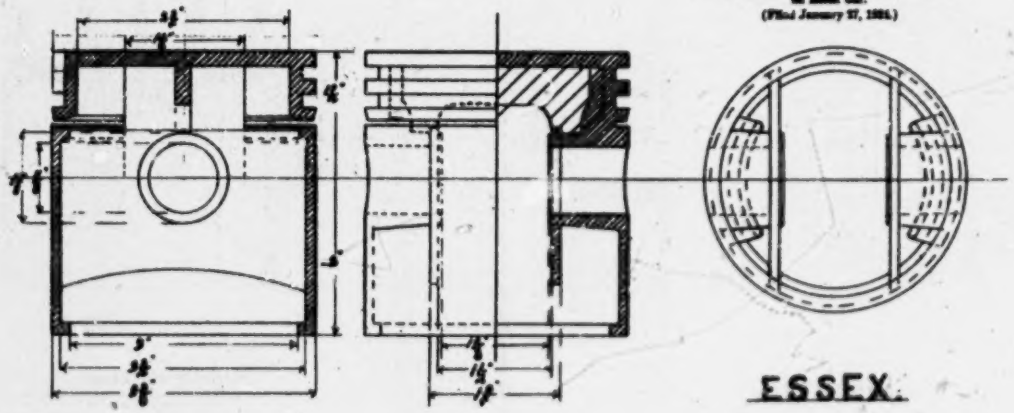

ESSEX.

1617-1618

BLANK PAGE

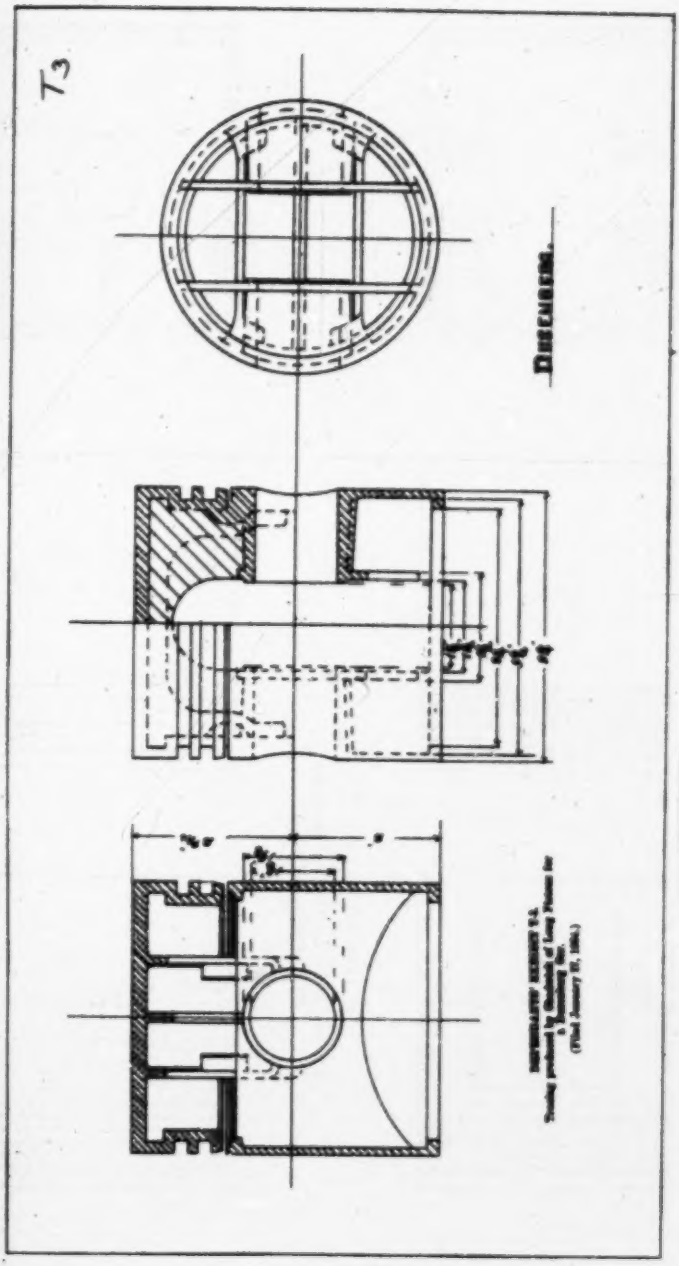

1619-1622

BLANK PAGE

[fols. 1605-1608] **DEFENDANTS' EXHIBIT L**

Letter from George J. Oltsch to Wm. M. Venner, Dated September 22, 1920

(Filed January 27, 1934)

Sept. 22, 1920.

Mr. Wm. M. Venner, 2217 Locust St., St. Louis, Mo.

DEAR SIR:

In the matter of your application for a patent on Piston, I am this day in receipt of a communication from the Patent Office advising that all of the claims as originally filed are deemed to be allowable with the exception of one claim, which leaves five allowable claims.

Claim 1 was rejected on British patent to Ricardo, No. 17,953, dated Dec. 23, 1915. Until I receive a copy of this patent, which has been ordered, I will not be able to determine as to the pertinency of said reference. Whether or not said claim is justly allowable, the allowed claims will afford you very good protection. The rejected claim was not limited in scope to a piston having a skirt portion made up of sections supported by webs extending from the head portion of the piston, while the allowed claims are limited to some of said sections being integrally formed with the head, and other independently supported by webs extending from the head. The latter as covered by your allowed claims appears to be the most practicable construction, and, if such should be the case, the claims allowed you will afford you ample protection.

I will take further action as soon as copy of the Ricardo patent comes to hand, and in the meantime you should decide whether you desire any foreign patents, and whether you desire an infringement search made, in order to be on the safe side, if you intend to market the piston. I am very much pleased to be able to submit such a favorable report.

Very truly yours.

[fol. 1609] **DEFENDANTS' EXHIBIT N**

Article from Pages 8 and 9 of Manual for Trouble Shooters of Franklin Automobile Company, entitled "Piston Slap"

(Filed January 27, 1934)

PISTON SLAP

A slap is more noticeable when the engine is cold and tends to disappear when the engine is hot. It gives a much sharper noise than a "ping" and since a slap usually

appears in but one cylinder, it is of less frequency than a ping. A constant application of power at a moderate speed, such as going up a slight incline at 18 or 20 miles an hour with a cool engine, will bring out a slap more distinctly than anything else.

Slaps are due to the clearance allowed between the piston and the cylinder walls. A certain amount of clearance is necessary to take care of the expansion of the heated piston. (A piston gets hotter and expands more than a cylinder.) Aluminum pistons expand more than cast-iron or steel ones and since this extra expansion requires more clearance, they are more apt to slap. A slap that disappears after an engine is warmed up can do no harm and it is a waste of money to try to eliminate it. Often when such a slap is removed from one cylinder it will appear in another.

Three types of pistons have been used in Series 9 and 10 engines, "tapered," "straight," and "oval." The proper clearances for these are as follows:

Piston	Clearance at top of skirt	Clearance at Bottom of skirt
Tapered	.008″	.003″
Straight	.005″	.005″
Oval	.005″	.003″

The original clearance of a piston and cylinder is given by the figures stamped on the head of the piston and on the bottom of the cylinder flange.

To determine which piston is slapping, run the engine at the speed at which the slap is most noticeable and then short circuit the spark plugs one at a time with a screw-driver. When the slapping cylinder is short circuited, the slap will be much less noticeable or will disappear entirely. Another method of locating a slap is to have the engine idling and then to open the throttle in short, sudden jabs, feeling each cylinder with the point of a small [fol. 1610] screw-driver held just under the cooling fins as this is done. A distinct tap can be felt on the slapping cylinder. Another method is to use a long screw-driver as a "listening rod," placing the blade of the screw-driver against the cylinder and the handle against the ear. [The only remedy for a slapping piston is to install a larger piston or a smaller cylinder. If the cylinder should be too badly worn (over .005″) to install a new piston, the cylinder can be reground by the factory for a nominal charge and an oversize piston installed.]

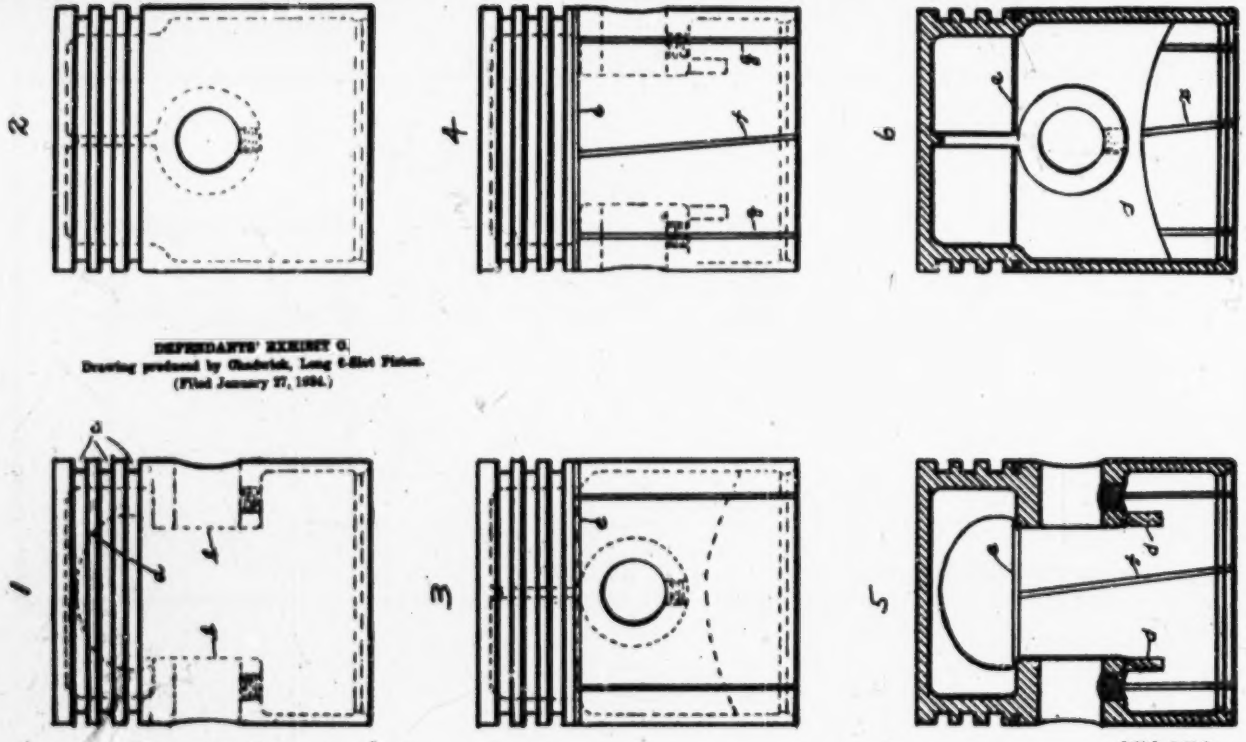

DEFENDANTS' EXHIBIT G.
Drawing produced by Chadwick, Long 6-Slot Piston.
(Filed January 27, 1934.)

1611-1612

BLANK PAGE

DEFENDANTS' EXHIBIT 8.
Tracing of "Oldsmobile Six" Piston produced by Chadwick.
(Filed January 27, 1934.)

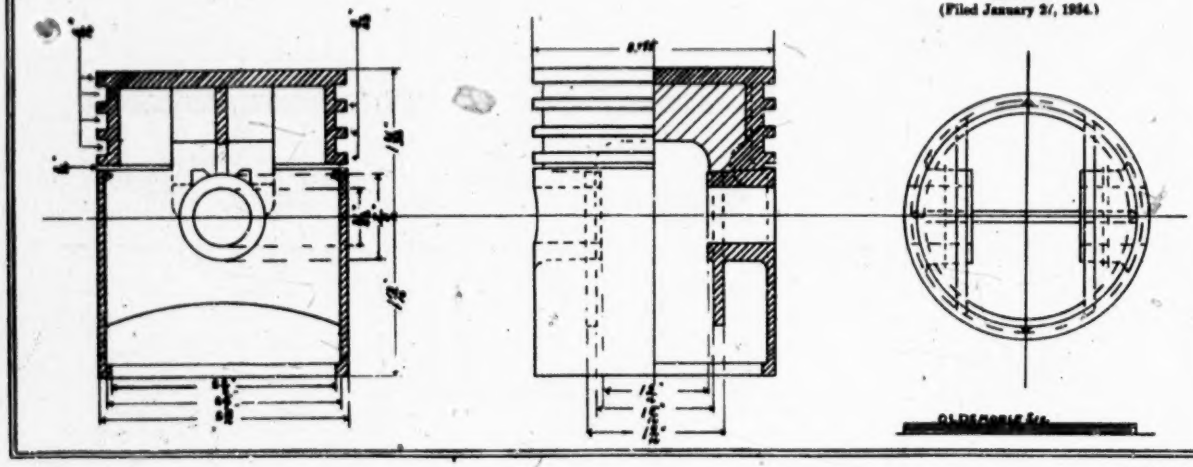

1613-1614

BLANK PAGE

DEFENDANTS' EXHIBIT T-1.
Tracing produced by Chadwick of Long Plaines for Ford, Model T Car.
(Filed January 27, 1934.)

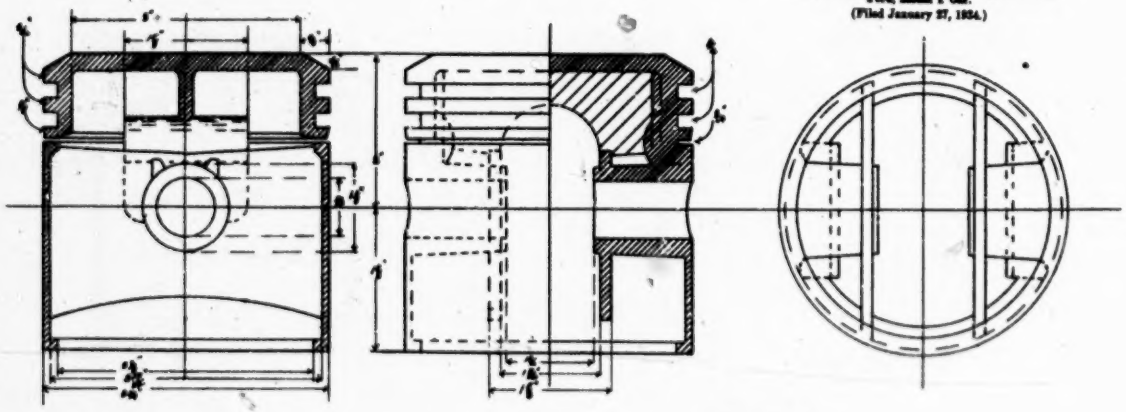

FORD

1615-1616

BLANK PAGE

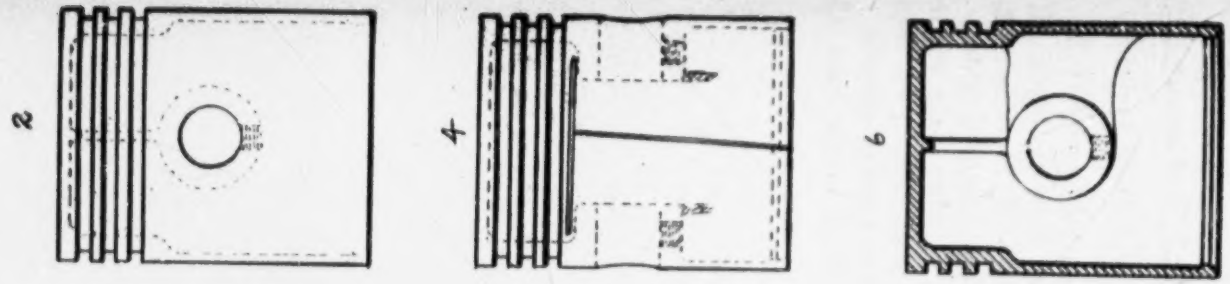

DEFENDANTS' EXHIBIT W.
Photostat of Trunk Piston added to by Chadwick to show T-slot Long Piston.
(Filed January 27, 1904.)

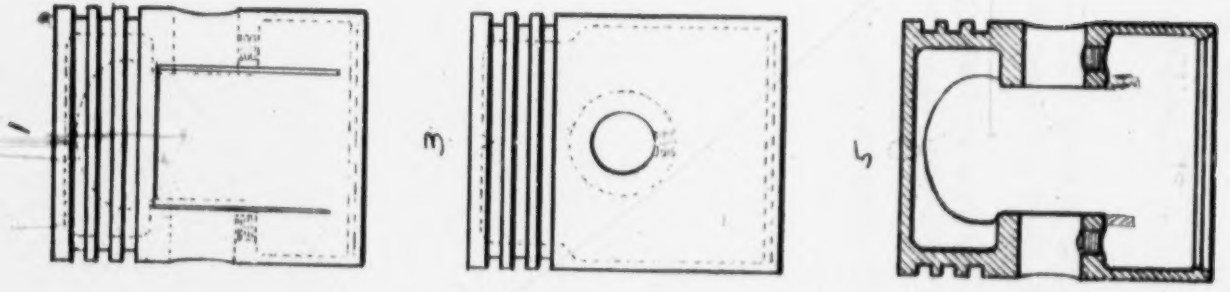

1623-1624

BLANK PAGE

[fols. 1625-1626] **DEFENDANTS' EXHIBIT X**

Digest of Defendants' Exhibit X

Agreement, dated September 20, 1919.

Between E. C. Long and M. K. Weems.

Subject Matter:

E. C. Long business at 1037 and 1039 Main Street, Quincy, Ill., together with certain named machines, tools, supplies, etc. sold to M. K. Weems for $45,000.00.

Long licensed Weems to manufacture and sell pistons under each patent owned by Long and each Long application for patent then on file.

Weems agreed to pay Long a royalty of twenty (20) cents for each piston made or sold.

(Here follows 1 photolithograph, side folio 1627-1628)

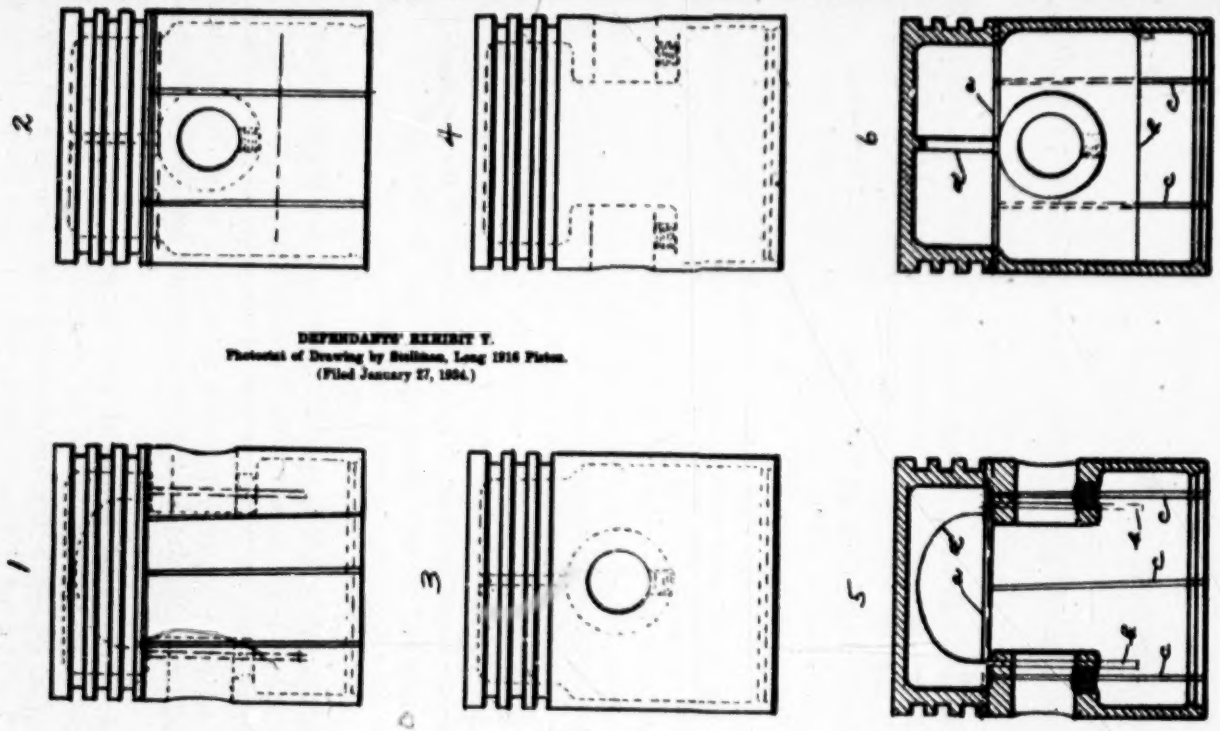

DEFENDANTS' EXHIBIT Y.
Photostat of Drawing by Stellman, Long 1916 Piston.
(Filed January 27, 1934.)

1627-1628

666A

BLANK PAGE

[fol. 1629] **DEFENDANTS' EXHIBIT Z**

L. M. Stellman's Report, dated March 18, 1919, entitled "Test on Long Pistons"

(Filed January 27, 1934)

March 18, 1919.

Z/RM

(Docket Division Dec. 23, 1927, U. S. Patent Office)

TEST ON LONG PISTONS

Mr. Long, our dealer in Quincy, Ill., was out here with a new design of aluminum piston for our motor in connection with which he has had four claims allowed by the Patent Office. Several tests have been run in connection with this piston; the first being a set-up test on the block with baffle plates under the cylinders which did not give a sufficient amount of oil so but what a set-up was obtained in about nine minutes. This was a more severe test than we ordinarily give our regular production piston such as we are now using, and it is doubtful even if the pistons were undercut as we recommend them to be for use in the southwest would stand up under this test any longer than these pistons did. There was also a tendency toward too little oil. After this test, we decided to put these pistons on the road in a motor and consequently Mr. Long and the writer started out with a sedan equipped with new pistons, new rings and new cylinders which had never been run in together, the pistons having oil grooves cut circumferentially so as to give the pistons **and** [in]* cylinder wall a little more oil than we had on the set-up test. These pistons and cylinders were placed on sedan demonstrator motor with spark plug holes undercut as regards to the threads, as per latest experiments, so as to cut down pre-ignition as much as possible, with which we have recently had trouble on production cars.

We carried four people and luggage, leaving Syracuse at 2:30 p. m., making Utica in an hour and twenty minutes, although it was scarcely possible to get over 40 miles an hour on the level with the car, due probably to the fact that neither the rings nor the pistons were run in at all. Power gradually improved although it was a very severe test to

[* Matter enclosed in brackets struck out in copy.]

take a green motor and drive from Syracuse to Utica in an hour and twenty minutes. Also made the run from Syracuse to Albany in 4 hours and one-half, driving from Syracuse to Poughkeepsie in 6¾ hours of running time. This is [fol. 1630] a mileage of about 240 miles. During this comparatively high speed, the car got so it would hold 45 miles on the level continuously. One quart of oil was consumed in the total 240 miles. This oil consumption is very low, considering the speed which the car made. It has been the writer's experience that a normal production car would consume approximately one gallon of oil under the same conditions.

The run was continued to New York the next day where a day was spent at the Aeronautical Show. The next morning the oil was drawn off from the engine base, washed out, new oil put in, and we left Columbus Circle at 9 a. m., driving up through Connecticut, through Bridgeport, New Haven to Hartford, making 125 miles in 3½ hours. On this run, there was considerable comparatively level straight road and the car would hold 50 miles an hour against a slight head wind. During this run the Franklin kept ahead of a Cadillac coupe which was evidently bent on beating us to Hartford. After reaching Hartford, it was decided that it was practically impossible to set this car up under normal conditions on the level under temperatures encountered which were fairly cool, even though hot air was used both on suction yoke manifold and carburetor intake. Therefore we decided to take the car up into the Vermont hills through mud roads. We drove the car 120 miles on low and second gear work over roads that were axle deep with mud, so deep that we scraped the flywheel boot off. While it was possible to get the motor to pre-ignite so that the engine would lose power badly and it would be necessary to drop into a lower gear; as soon as this was done, the engine speed was allowed to pick up, pre-ignition would disappear and the motor would run apparently in excellent shape. With regular production motor or cast iron pistons if pre-ignition was obtained as it was in this car, the motor would, in the writer's opinion set up when shifted to lower gear and speed increased. During this 120 mile drive in the mud, sedan was carrying one thousand pounds dead load. The remainder of the trip was completed back to Syracuse over the Mohawk trail, coming up the long grade on the east side of Hoosick Mountain with about 3" of soft snow. The whole

grade was negotiated in second gear except when the pre-ignition got so great that it was necessary to drop into low gear for a short period of time. The last 150 miles was run in 4¼ hours running time. The total oil consumption from the time we left New York, during all our low and second [fol. 1631] gear and hard work, was at the rate of 680 miles to the gallon.

From this test it would look as if it might be desirable to change the baffle plates slightly from those used on this motor so as to allow the motor to use more oil at low speeds. The gasoline consumption for the total 970 miles averaged 15 miles to the gallon which would seem to be very good considering the speed and the condition of the roads. It seems to the writer as if this piston was operating satisfactorily and would run in a perfectly satisfactory manner. The only question would be as to how the performance in regard to pre-ignition and loss of power would be in the southwest where the temperatures encountered are considerably higher. On examining the pistons after the motor was torn down, there was no trouble encountered with scores or roughness on the piston, but the cylinders were slightly scored in a vertical direction. This probably was due to starting the motor out and running under extremely hard conditions without first running pistons and cylinders together.

L. M. STELLMAN.

[fol. 1632] **DEFENDANTS' EXHIBIT AA**

Digest of Defendants' Exhibit AA

License Agreement, dated March 20th, 1919.

Between Elmer C. Long of Quincy, Illinois, and the H. H. Franklin Manufacturing Company, of Syracuse, New York.

Subject Matter:

Elmer C. Long grants a non-exclusive license to the Franklin Company under Long Application for Patent, Serial No. 281,175 and under all patents and applications owned or thereafter acquired by Long.

The Franklin Company agrees to pay Long a royalty of twenty (20) cents for each of the first thirty thousand (30,000) pistons made and sold, fifteen (15) cents for each of the next thirty thousand (30,000) pistons made and sold, and ten (10) cents for each piston made and sold thereafter.

BLANK PAGE

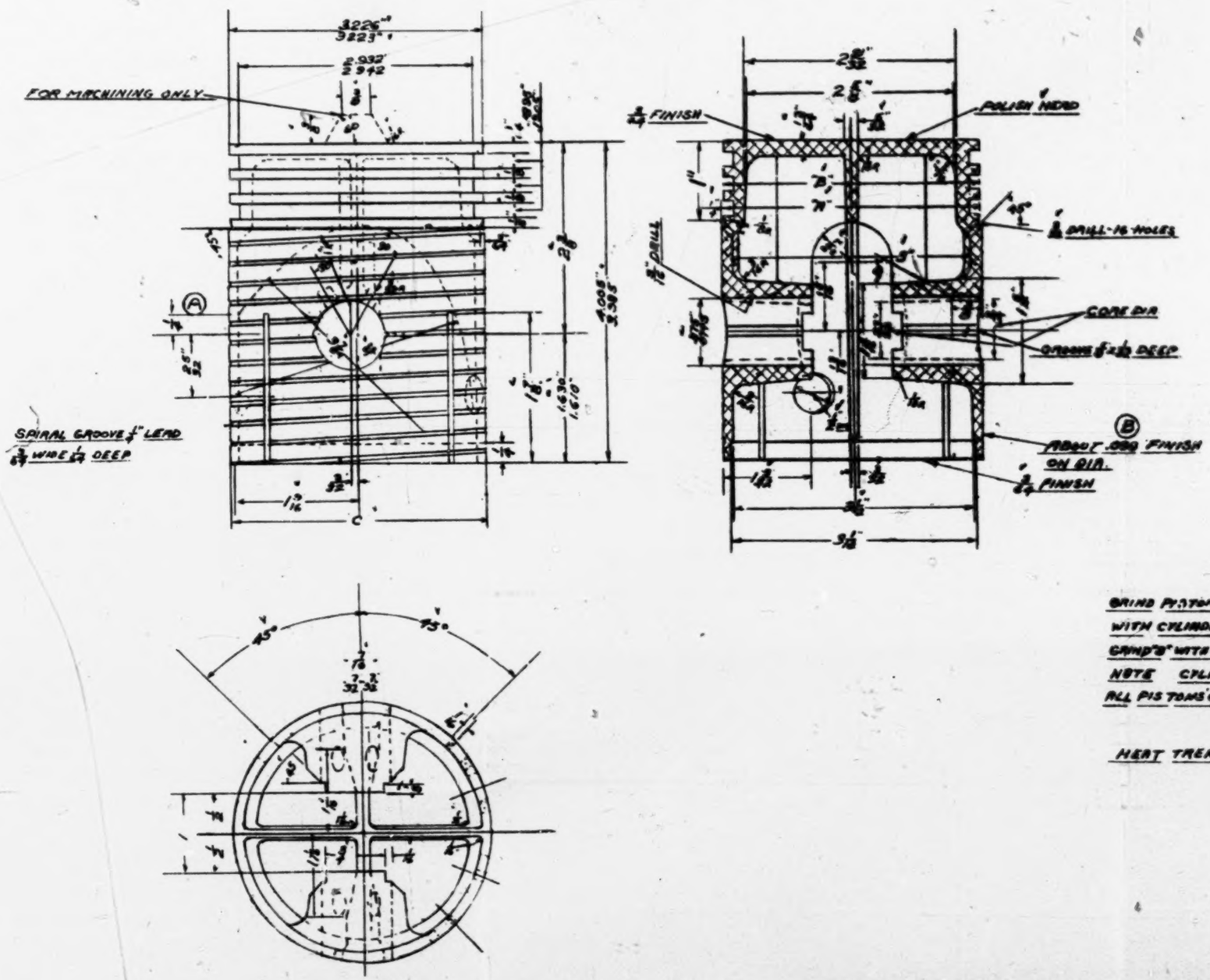

GRIND PISTON "A" OF SUCH SIZE THAT WHEN ASSEMBLED WITH CYLINDER CLEARANCE WILL BE .018"
GRIND "B" WITH .01 CLEARANCE TAPERING TO .002" AT "C"
NOTE CYLINDER BORE 3.225"
ALL PISTONS ON SAME MOTOR MUST BE SAME WEIGHT

HEAT TREATED AND BRINELL 80±10

122-5

DEFENDANTS' EXHIBIT CO'(1).
Blueprint D-793X of The Aluminum Castings Co. (Drawing of Proposed Design of Piston for H. H. Franklin Mfg. Co.
(Filed January 27, 1934.)

REVISIONS	A	B	C	D	E	F	G
PREVIOUS	[illegible]	.066					
CHANGED	2-26-13	2-26-13					
TO	1/4"	.093					
SEE	THEIR PRINT	THEIR PRINT					

—NOTE—
DO NOT SCALE THIS BLUEPRINT
TOLERANCES ON ALL FINISHED DIMENSIONS TO BE ±0.010 OF AN INCH UNLESS OTHERWISE SPECIFIED

DATE FEB 11 1919
ROUGH WEIGHT
DESIGNED BY
DRAWN BY C.W.T.
SCALE 1"=1"
FINISHED WEIGHT
MATERIAL LYNITE-N125
CHECKED BY [illegible]
APPROVED [illegible]

THE ALUMINUM CASTINGS CO.
CLEVELAND, OHIO
DRAWING OF
PROPOSED DESIGN OF PISTON
FOR H.H. FRANKLIN MFG. CO.
SUBSCRIBED DRAWING #[illegible]

PLANT N
DRAWING SYMBOL D-793X

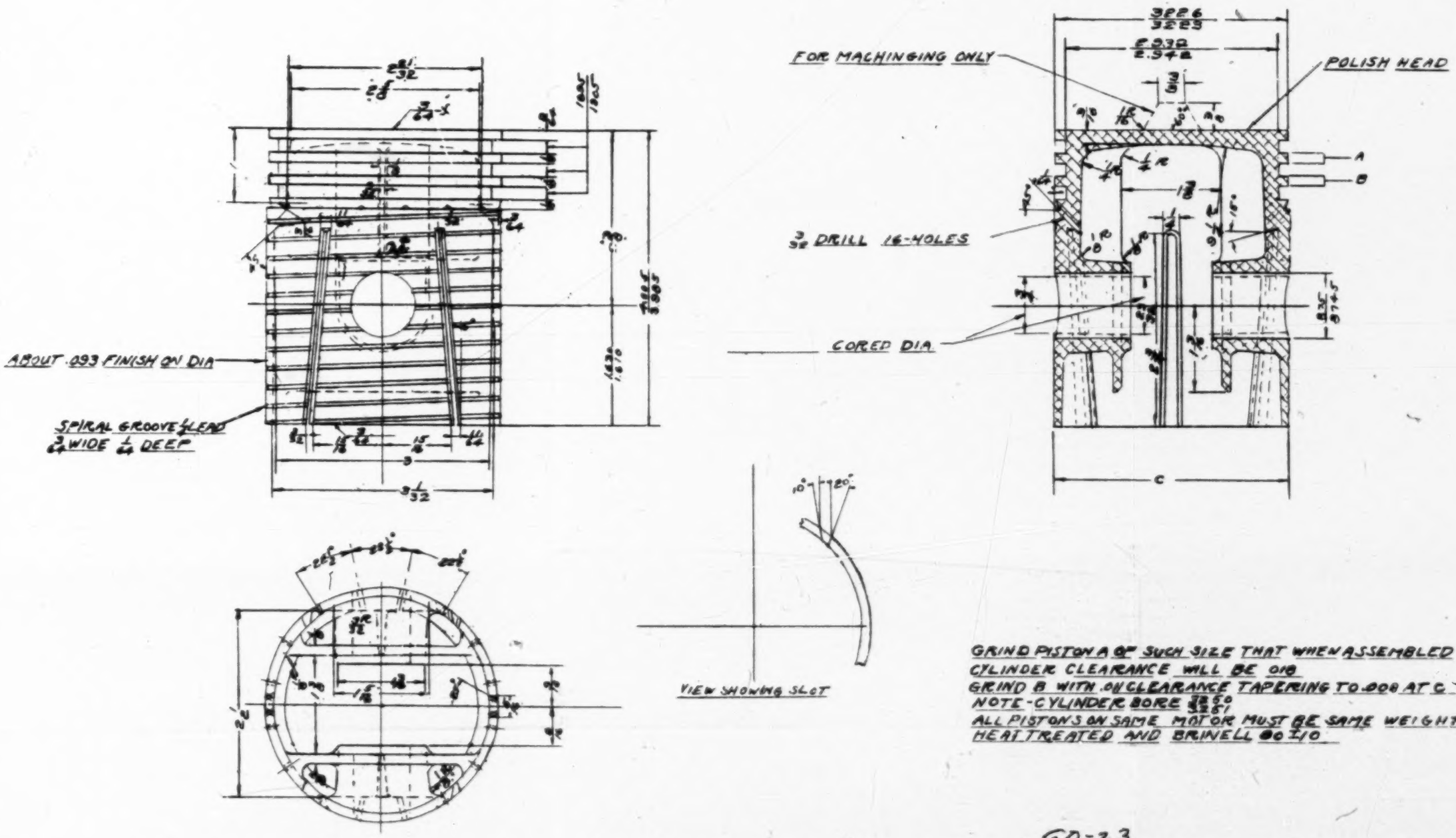

DEFENDANTS' EXHIBIT CC (2).
Blueprint D-944X of The Aluminum Castings Co. (Drawing of Proposed Design of Piston for H. H. Franklin Mfg. Co.)
(Filed January 27, 1934.)

REVISIONS	A	B	C	D	E	F	G
PREVIOUS							
CHANGED							
TO							
SEE							

-NOTE-
DO NOT SCALE THIS BLUEPRINT
TOLERANCES ON ALL FINISHED DIMENSIONS TO BE ±0.010 OF AN INCH UNLESS OTHERWISE SPECIFIED

DATE MAY-6-1919
ROUGH WEIGHT
DESIGNED BY
DRAWN BY Friedly
APPROVED
SCALE 1"
FINISHED WEIGHT
MATERIAL LYNITE-N-182
CHECKED BY Nemec

THE ALUMINUM CASTINGS CO.
CLEVELAND OHIO
DRAWING OF
PROPOSED DESIGN OF PISTON
FOR H.H. FRANKLIN MFG. CO.
CUSTOMERS DRAWING
PLANT N
DRAWING SYMBOL D-944X

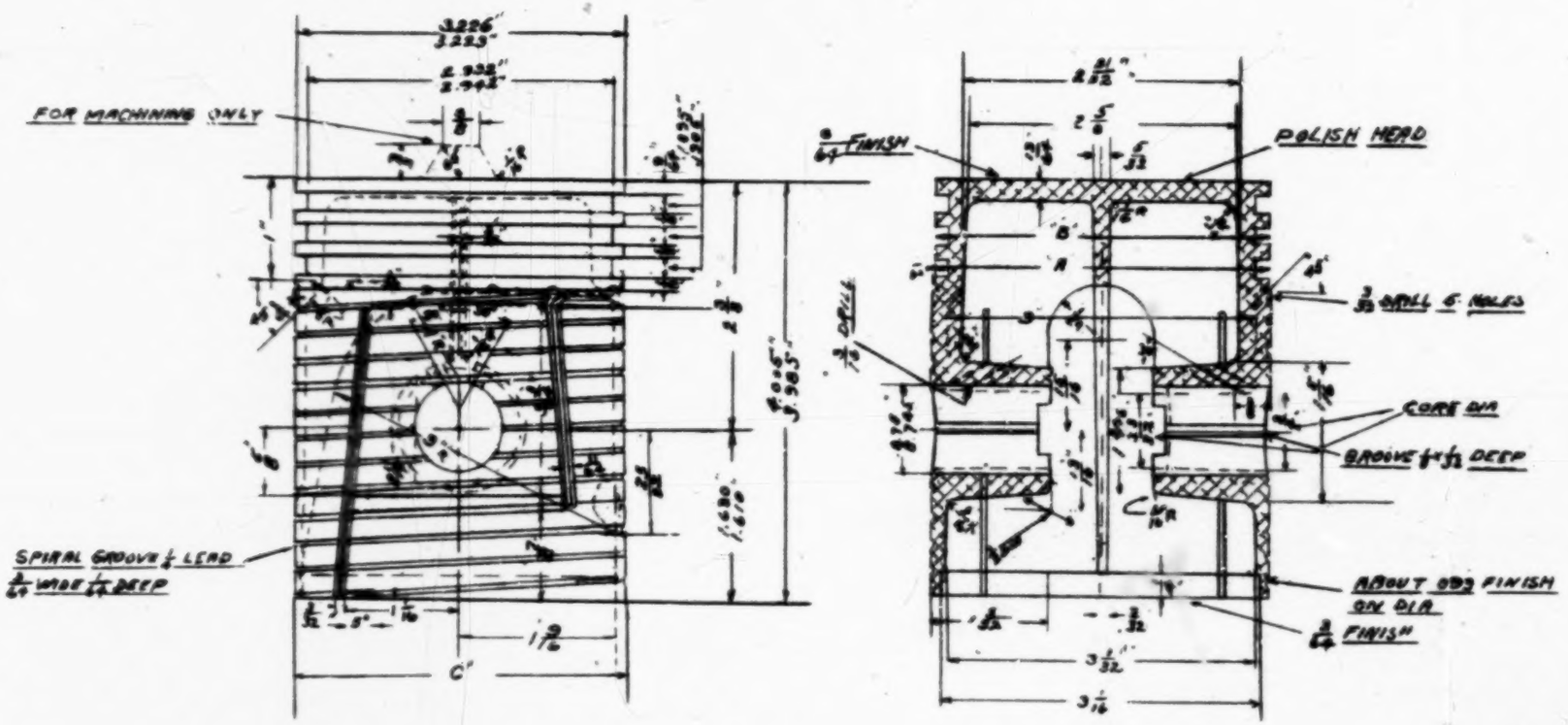

GRIND PISTONS OF SUCH SIZE THAT WHEN ASSEMBLED WITH CYLINDER CLEARANCE WILL BE .018
GRIND WITH .001 CLEARANCE TAPERING TO .002 AT "C"
NOTE- CYLINDER BORE 3.250" / 3.247"
ALL PISTONS ON SAME MOTOR MUST BE SAME WEIGHT

HEAT TREATED AND BRINELL 302-10

DEFENDANTS' EXHIBIT CC (3).
Blueprint D-960X of The Aluminum Castings Co. (Drawing of Proposed Design of Piston for H. H. Franklin Mfg. Co.)
(Filed January 27, 1934.)

REVISIONS	A	B	C	D	E	F	G
PREVIOUS							
CHANGED							
TO							
SEE							

-NOTE-
DO NOT SCALE THIS BLUEPRINT
TOLERANCES ON ALL FINISHED SURFACES TO BE ±.010 OF AN INCH UNLESS OTHERWISE SPECIFIED

DATE May 20 1932
ROUGH WEIGHT
DESIGNED BY
DRAWN BY
APPROVED
SCALE 1" = 1"
FINISHED WEIGHT
MATERIAL ALUMINUM ALLOY
CHECKED BY

THE ALUMINUM CASTINGS CO.
CLEVELAND, OHIO
DRAWING OF PROPOSED DESIGN OF PISTON
FOR H H FRANKLIN MFG CO
PURCHASERS DRAWING
PLANT N
DRAWING SYMBOL D-960X

BLANK PAGE

BLANK PAGE

DD

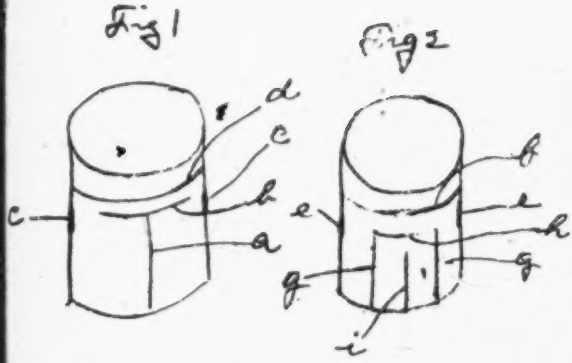

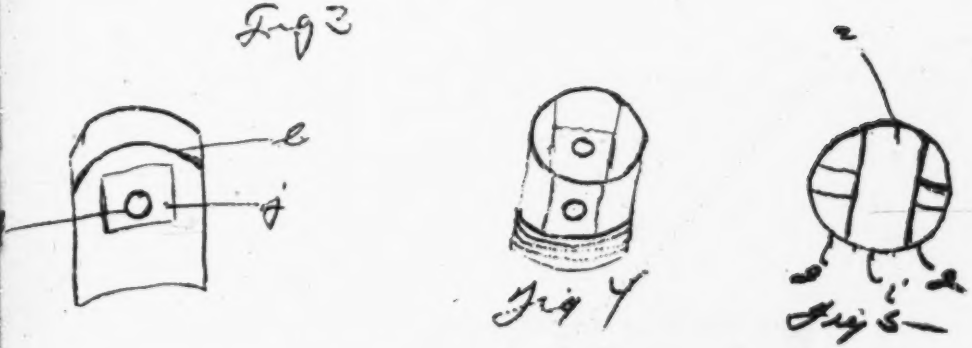

DEFENDANTS' EXHIBIT DD.
Sketch of Long Piston seen by Royalty in 1913.
(Filed January 27, 1934.)

FORM P-2 NAME E. C. Long		ADDRESS Gulick Ex 31	
PATT. NO. H-4	DESCRIPTION	No. OF CORE BOXES 1	BIN No. 398
SPECIAL IDENTIFICATION 1 Nord			

DATE RECEIVED	DATE RETURNED	DATE RECEIVED	DATE RETURNED
10/10/19	1/28/20		

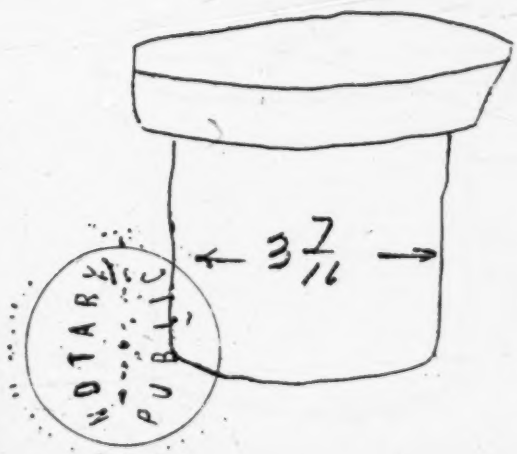

DEFENDANTS' EXHIBIT JJ.
Photostat of Pattern Record Card marked H-4.
(Filed January 27, 1934.)

Tightly Bound

BLANK PAGE

Fig 1

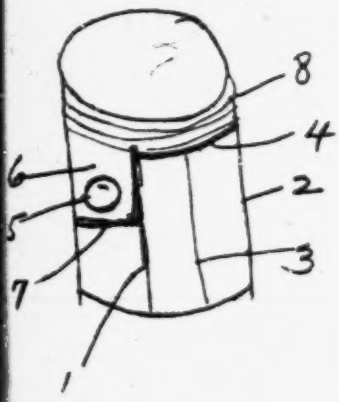

Fig 2

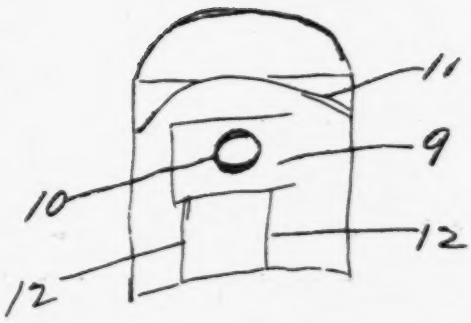

DEFENDANTS' EXHIBIT EE.
Sketch of Long Piston by Royalty in February 1918.
(Filed January 27, 1934.)

BLANK PAGE

Fig 3

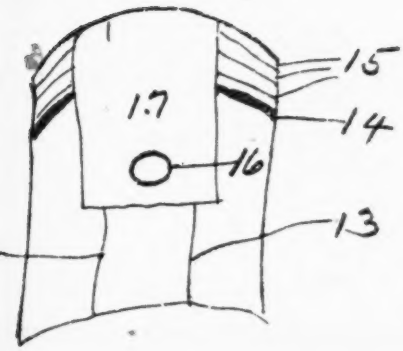

Fig 4

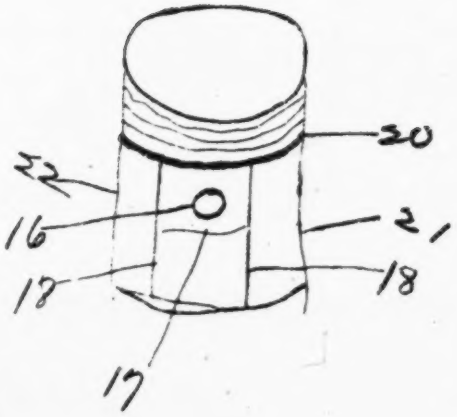

DEFENDANTS' EXHIBIT FF.
Sketch of Other Views of Piston shown in Exhibit EE.
(Filed January 27, 1934.)

1639

BLANK PAGE

DEFENDANTS' EXHIBIT GG.
Photostat of Pattern Record Card marked D-8764.
(Filed January 27, 1934.)

FORM P-2. NAME E. C. Long Mfg Co	ADDRESS Gulick - Ex 31		
PATT. No. D8714	DESCRIPTION	No. OF CORE BOXES 1	BIN No. 398
SPECIAL IDENTIFICATION 1 Wood			

DATE RECEIVED	DATE RETURNED	DATE RECEIVED	DATE RETURNED
1/29/19	1 Wood - Gilberts		
	3/21/19 - 1 Wood - 1 C.B.		

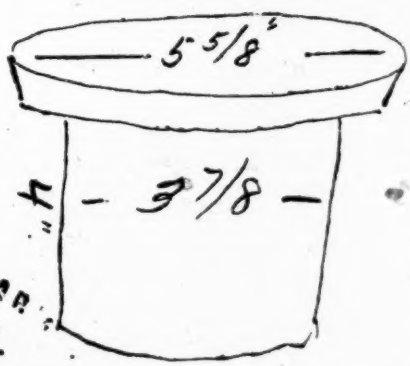

NOTARY PUBLIC

Tightly Bound

BLANK PAGE

FORM P-2.
NAME E. C. Long Mfg Co ADDRESS Orchard Ex 31

PATT. NO. A640 DESCRIPTION No. OF CORE BOXES BIN No 398

SPECIAL IDENTIFICATION Wood - Gilbert.

DATE RECEIVED	DATE RETURNED	DATE RECEIVED	DATE RETURNED
10/16/18			
12/10/18	- 1 Wood	- 1 C.B.	
	1/16/19		
1/24/19		1	
2/22/19	- 4 Wood	- 1 C.B.	
	3/21/19 -	4 Wood - 1 C.B.	

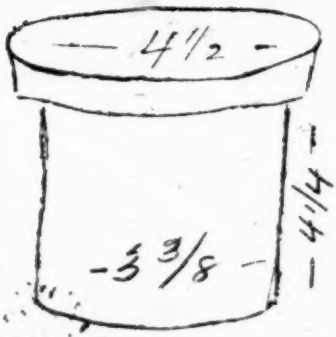

DEFENDANTS' EXHIBIT HH.
Photostat of Pattern Record Card marked A-640.
(Filed January 27, 1934.)

Tightly Bound

BLANK PAGE

DEFENDANTS' EXHIBIT II.
Photostat of Pattern Record Card marked B-122.
(Filed January 27, 1934.)

FORM P-2.
NAME E C Long Mfg Co ADDRESS Gulick-Ex 31
PATT. NO. B122 DESCRIPTION — No. OF CORE BOXES — BIN No. 398
SPECIAL IDENTIFICATION 1 Wood -

DATE RECEIVED	DATE RETURNED	DATE RECEIVED	DATE RETURNED
12/19/18	2 " 12/31/18	Gilbert	
2/22/19 -	1 Wood -	1 C.B.	
	3/21/19 -	1 Wood - 1 C.B.	

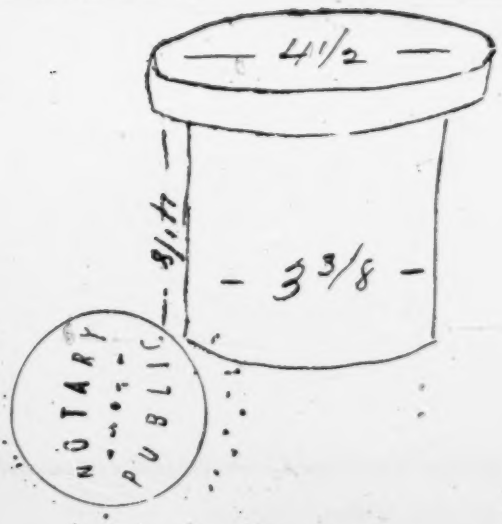

1642

Tightly Bound

BLANK PAGE

FORM P-2
NAME E. C. Long & Co. ADDRESS Gulick - Ex 31

PATTERN No.	DESCRIPTION	No. OF CORE BOXES	DIN No.
C123		1	398

SPECIAL IDENTIFICATION 1 Wood

DATE RECEIVED	DATE RETURNED	DATE RECEIVED	DATE RETURNED
1/25/19	2/6/19		
2/22/19 -	4 Wood	1 C B	
	3/21/19 -	4 Wood - 1 C.B.	

570
571

DOCKET DIVISION
MAR 17 1928
U.S. PATENT OFFICE

NOTARY PUBLIC

DEFENDANTS' EXHIBIT KK.
Photostat of Pattern Record Card marked C-123.
(Filed January 27, 1934.)

Tightly Bound

BLANK PAGE

FORM P-2.

NAME E. C. Long | ADDRESS LL

PATT. No. A640 | DESCRIPTION | No. OF CORE BOXES | BIN No.

SPECIAL IDENTIFICATION 1 Wood Core Box 398

DATE RECEIVED	DATE RETURNED	DATE RECEIVED	DATE RETURNED
	Use Patt A 640 as per instruction on Core Box 3/21/14		

DEFENDANTS' EXHIBIT LL.

Card bearing notation "Use Pattern A-640 as per instructions on core box."

(Filed January 27, 1934.)

BLANK PAGE

FORM P-2

NAME E. C. Long M C | ADDRESS | MM

PATT. No. A641 | DESCRIPTION | No. OF CORE BOXES 1 | BIN No. 398

SPECIAL IDENTIFICATION 1 Hood

DATE RECEIVED	DATE RETURNED	DATE RECEIVED	DATE RETURNED
4/18/19			

Cindy Watson
1104 Chemical Bldg

DEFENDANTS' EXHIBIT MM.
Card bearing designation, "Patt. No. A-641."
(Filed January 27, 1934.)

PISTON DESIGN.

By Harry R. Ricardo, B.A., A.M.I.C.E.

IN the March issue of *The Automobile Engineer* last year the writer gave a description of a design of aluminium piston which he had employed with considerable success. In this design a serious attempt was made:

(*a*.) To reduce the weight by disposing the material in such a way that the load was transmitted as directly as possible from the crown to the gudgeon pin and from the gudgeon to the bearing surfaces.

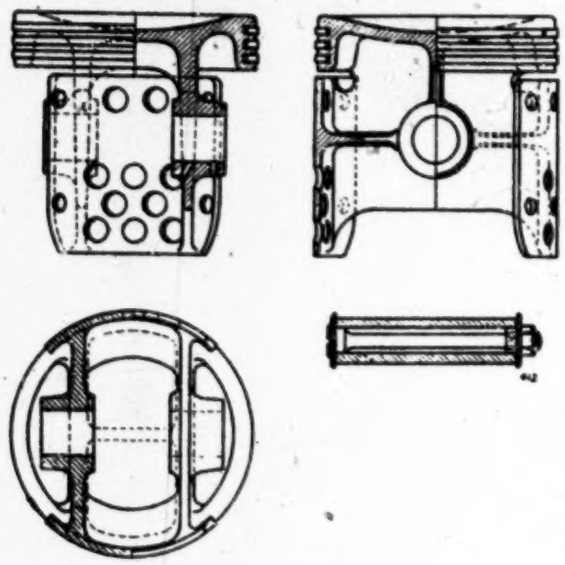

Fig. 1.
Divided slipper piston design for bores up to 5in.

(*b*.) To reduce the area of rubbing surface, thereby reducing the fluid friction of the lubricant.

(*c*.) To reduce the oil consumption and the tendency to carbonise the oil by giving free vent for the lubricant, and thus preventing it from being "rolled up" between the piston and cylinder walls, which was found to be the chief cause of oil reaching the combustion chamber.

(*d*.) To reduce the bending of the gudgeon pin by transmitting the load to it at points as near the centre as the width of the connecting rod small end bearing would permit.

Since that date a very considerable number of these pistons have been made and tested in engines of various kinds, and as a result it has been found that:

(1.) Such pistons complete with gudgeon pins and piston rings are actually about 30% lighter than aluminium pistons of the normal design and of the same thickness of crown.

(2.) The piston friction is actually about 35% less than in the case of a normal trunk piston of the same size and material.

(3.) The oil consumption is lower than in the case of an ordinary trunk piston, and the tendency to carbonise is less.

(4.) The use of a short floating gudgeon pin renders possible a very substantial reduction in the weight of the pin, for not only is the rigidity of the pin greatly increased, with the result that both the diameter and length of bearing serface can be substantially reduced without any measurable wear being detected, but also the rotation of the pin prevents any tendency to unequal or local wear. This is a very important point, for not only do these short floating pins show much less wear than the ordinary type, but also in these very light pistons the weight of the gudgeon pin itself and the small end bearing of the connecting rod constitute a serious proportion of the total reciprocating weight.

This piston, however, in common with all other aluminium pistons, requires a considerable allowance for expansion, with the result that it is liable to be somewhat noisy when cold. In order to reduce the amount of clearance necessary, the writer has recently patented a design in which the connection between the ring-carrying portion of the piston and the slipper surface is severed, so that heat can only be conducted to the slipper surfaces by way of the main webs and not down the sides. The main webs themselves are so designed that the heat conducted from the crown is distributed evenly over the surface of the slippers. The effect of this design is that the bulk of the heat is delivered to the cylinder walls through the piston rings, while only a comparatively small portion reaches the slipper surfaces, and this is distributed evenly over them. Such a design would not be suitable for very large

Fig. 3.

engines on account of the reduced facilities for dissipating the heat from the crown, but for pistons up to 5in. bore at any rate it appears to be quite satisfactory. Experience has shown that with these divided slippers the clearance necessary can be reduced to about one-half of that required for the ordinary type, and to little, if any, more than is required for a cast iron piston. Such a piston of 4in. bore is shown in fig. 1. Several of these pistons have been in use in motor car engines, and their quiet running has been most noticeable.

Fig. 2 shows a further development, in which the bearing surface on the side which does not receive the maximum thrust from the connecting rod has been yet further reduced, and also the main webs

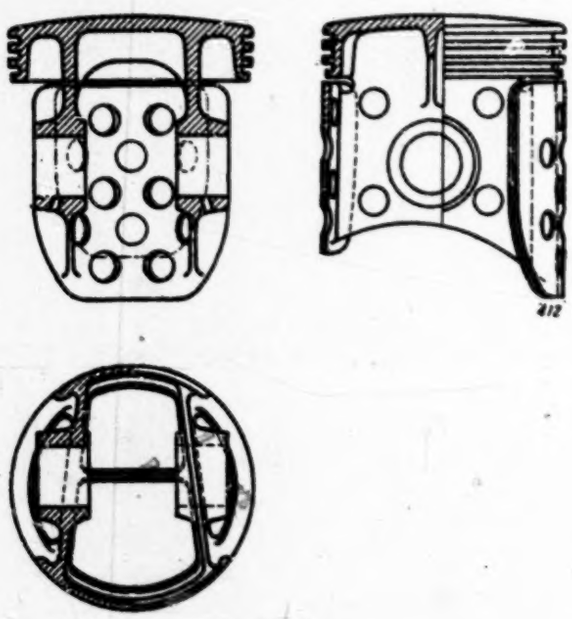

Fig. 2.
Divided slipper piston design with reduced slipper on the side opposite maximum thrust.

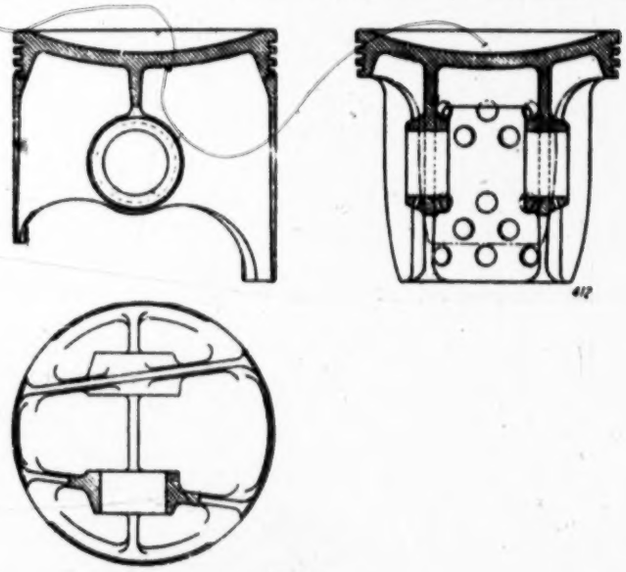

Fig. 4.
Solid slipper piston for engine of 7in. bore.

DEFENDANTS' EXHIBIT 3-S.
Page 274 of "The Automobile Engineer" of October 1918, Vol. VIII, No. 119.
(Filed January 27, 1934.)

BLANK PAGE

FILED
JAN 27 1934
At ..... O'clock ..... M.
F. J. DENZLER, Clerk
U. S. District Court, N. D. O.

Defts Ex 4-A
30

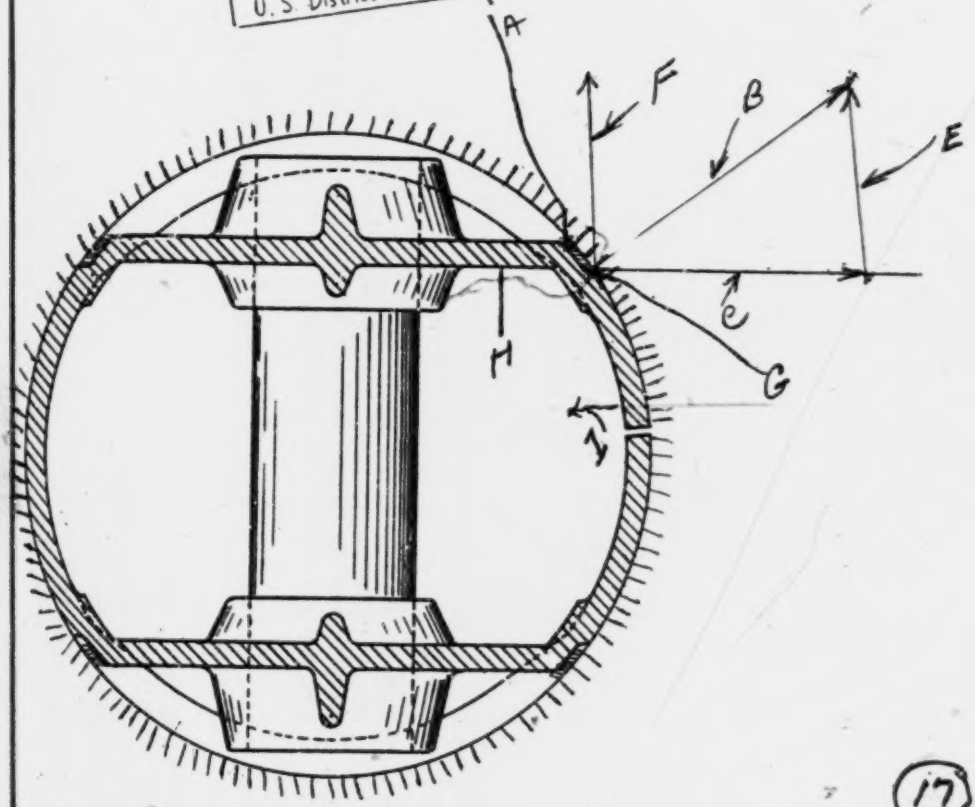

(17)

DEFENDANTS' EXHIBIT 4-A.
Stellman Sketch of Maynard Patent Structure.
(Filed January 27, 1934.)

1649-1666

DEFENDANTS' EXHIBIT 4-G.
Pages 362, 363 and 364 of "Automotive Industries" for January 29, 1920.
(Filed January 27, 1934.)

30

Aluminum Piston Design*

This discussion divides the problem in two classes and there takes up the details of each class. The four points on which objections to these problems are based—wear, slaps, excessive oil consumption and crankcase dilution—are treated separately.

By E. G. Gunn

FROM a thermal standpoint aluminum pistons may be broadly divided into two classes:

(1) Those designed with the object of conducting the heat away from the head into the skirt and thence into the cylinder walls.
(2) Those designed with the object of partly insulating the skirt from the heat of the piston head.

Those in the first class are usually more or less conventional in design except that they have thicker walls, or ribs extending down from the head. They are generally used for high-duty engines. In these engines, which are usually of a rather large bore and comparatively low speed, the weight of the piston is secondary to its ability to keep the head from overheating, and piston slaps are not of much consequence. Therefore, for heavy-duty engines pistons of the first type seem logical. Sections of some of the types which come under the first group are given in Figs. 1, 2 and 3.

Passenger-Car Engines

For passenger-car engines the conditions are somewhat different. The duty is lighter and the bore usually smaller. This lessens the tendency toward excessive heat. Quietness being important, close-fitting pistons are desirable. Need for good accelerating ability and smoothness in operation makes lightness desirable. These considerations have led to much development work on pistons of the second type. The plan followed in most cases is to partially insulate the skirt from the piston head, thus minimizing the expansion of the skirt due to heat. Some of the ways of accomplishing this are shown in Figs. 4 to 11, inclusive.

Pistons of the Long and Franquist type are split to allow the piston to spring. They can for this reason be fitted more closely than the more conventional types. The conventional type with the comparatively thin wall is probably the most popular, and for the smaller bores serves very well. It is simpler and somewhat cheaper to make than other types. In all the other types shown there has been an attempt to insulate the skirt from the head. This allows the piston to be fitted more closely, thus minimizing piston slaps.

Four points are often brought up as objections to the use of aluminum pistons. These objections are the same as those encountered in the use of cast-iron pistons.

(1) Wear.
(2) Piston slaps.
(3) Excessive oil consumption.
(4) Crankcase dilution.

Wear has been shown to be largely a function of original smoothness. It is unreasonable to expect long life when aluminum pistons are fitted to cylinders of relatively hard material having a rough bore. Aluminum has been shown to be a good bearing metal, but it must run on a smooth surface, as in the case of babbitt metal. Much attention is paid to polishing the journals of a crankshaft, but we often see cylinder bores, whether ground or reamed, which are so rough that they can be marked with a lead pencil, although they may appear to be smooth. This is undoubtedly the cause of a great deal of initial wear on aluminum pistons. When cast-iron pistons are fitted this is not so apparent. Dust in the air also plays a very important part in wear. Engines run on the dynamometer give much longer service than engines in cars.

I have lately examined a truck piston with the top ring worn nearly in two, and with over 1/32-in. side clearance. The rings and piston were

*Paper read at the annual meeting of the S. A. E.

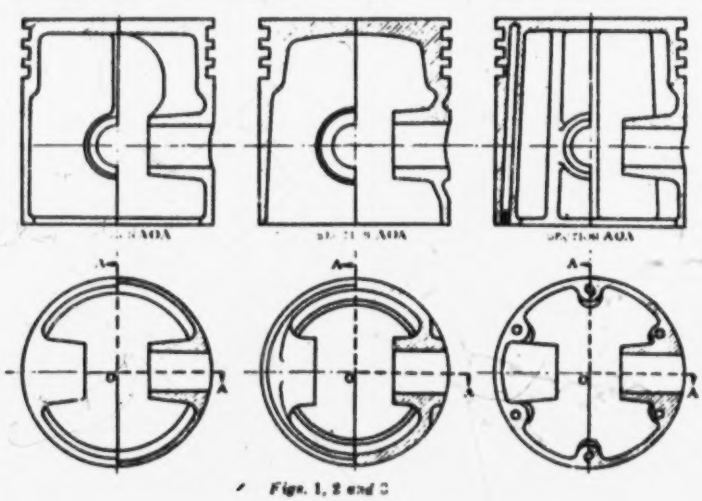

Figs. 1, 2 and 3

BLANK PAGE

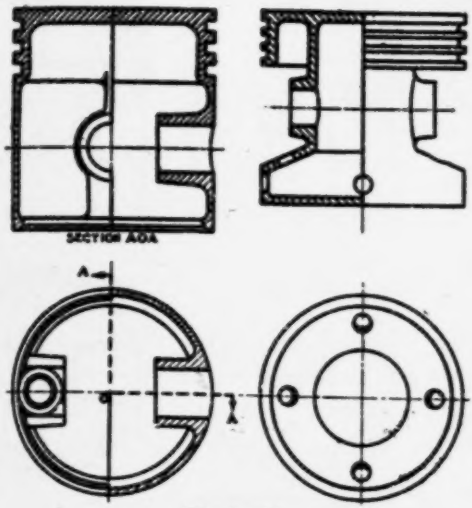

Figs. 4 and 5

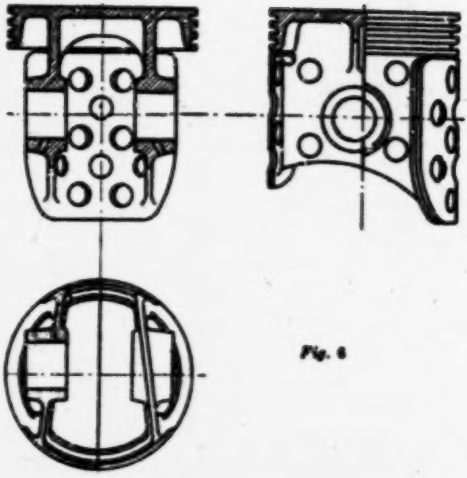

Fig. 6

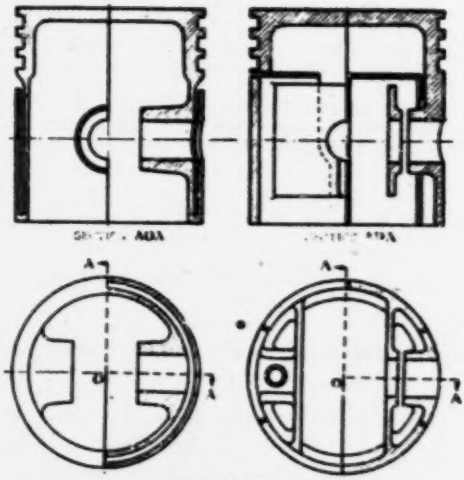

Figs. 7 and 8

both polished and showed no sign of scoring. This same model has repeatedly stood the same number of hours' running on test with wear so slight as to be hardly measureable. There is no question that an efficient air-cleaning device would greatly prolong piston and cylinder life.

Piston Slaps

Piston slaps can be overcome by using proper clearance. Pistons of the second design tend to make this condition easier to meet. Offsetting the piston-pin also tends to reduce piston slap. With 3½-in. and smaller bores there should be no trouble due to sticking with pistons of the conventional design fitted closely enough to prevent slaps, provided the piston and cylinder are of proper design. There should be no local hot-spots, and care should be taken in the design to prevent a condition tending to warp the cylinder when heated.

Much trouble was experienced with sticking aluminum pistons in a certain inserted-sleeve engine of about 3½-in. bore. The cylinder was in the form of a block aluminum casting, with inserted cast-iron sleeves. Clearances up to 1/64 in. were tried, but still the pistons seized. The sleeves were removed and found to be machined so that there was an air-gap of 0.006 in. between the sleeve and the cylinder wall. These sleeves were replaced with others which fitted all the way down, and pistons with 0.007-in. clearance were then found to be satisfactory.

This is perhaps an exaggerated case, but shows the bad effect of failure to carry the heat away from the cylinder bore rapidly. The top land of the piston must, of course, be given much more clearance than any other part. The next land requires less, and the least clearance can be given to the bottom of the skirt. The tapering necessarily increases rapidly as the top of the piston is approached. When the piston-pin is placed too near the rings, piston slaps are more frequent, for the clearance in the zone near the piston-pin bosses must be sufficient to take care of extreme heat conditions so that under ordinary running conditions this part of the piston has enough clearance to allow piston slaps. When the pin is placed farther from the head the clearance can be small enough to prevent slaps.

Some trouble has also been encountered, due to fitting pins tightly in the piston. When a piston with a tight pin is heated it expands and creeps out on the pin; when it contracts again it hangs to the pin so that the piston has a greater diameter parallel to the pin and a smaller diameter at right angles to it. This condition makes seizing easier and slaps more pronounced. This creeping can be demonstrated readily by applying a blow-torch flame to the head of a piston fitted with a tight pin.

Excessive Oil Consumption

When too much oil is thrown into the cylinder bores, tight-fitting pistons and special rings will not completely overcome the trouble. A great many tests have been run which show this conclusively, demonstrating that:

(1) With no control on the oil being thrown into the cylinder, rings which seal the top and bottom edge of the groove reduced the oil consumption.

BLANK PAGE

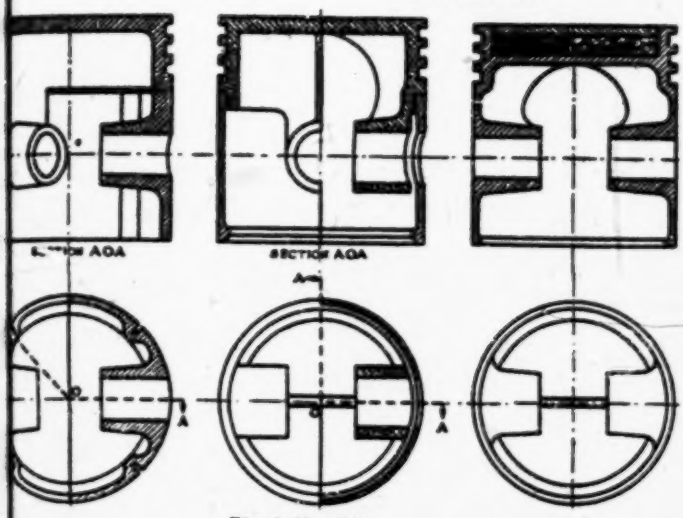

Figs. 9, 10 and 11

(2) When the oil is properly controlled, the oil consumption is very low even with rings having an up-and-down clearance of 0.004 in.

(3) With the oil controlled and with hot water circulated through the engine, the volume of liquid in the oil-pan increased, indicating dilution with fuel which passed the piston and rings. This was independent of the kind of rings used.

The engine was next run with a device arranged to heat the mixture to a temperature of about 160 deg. fahr. This was accomplished in such a way that the maximum amount of heat was applied when idling. The effect upon fuel vaporization was observed through a glass window and was clearly evident. The result was to diminish the amount of fuel in the oil-pan when idling, and the viscosity was not seriously affected thereby.

Before the installation of the heating device a black deposit was found on spark-plugs taken from the cylinders of cars on road test even when the oil consumption was very low.

After the installation the spark-plugs remained clean under all conditions. It has been common practice for a number of years to put a quantity of kerosene in the crankcase oil, when running-in an engine to allow the bearing parts to seat more quickly.

It is fair to expect that crankcase dilution has the same effect and that more rapid wear follows; hence the need for minimizing crankcase oil dilution with unburned fuel.

S. S. C. O. Steering Gear Lock

E show herewith an illustration of a novel lock which is applied to the steering gear of a car. The device consists of a spline fitting, which is riveted into the worm gear housing, and of a steel four-spline part attached to a special tube, can be inserted into any standard steering unit. ck itself is located immediately underneath the g wheel. This is said to have hundreds of different ations, and therefore to be absolutely safe.

locking device is covered by patents issued to . Muller, and is being manufactured by the U. S. Service Co., Milwaukee. Samples of this lock are ing tried out on Mitchell, Elgin, Kissel and Ogren nd we understand that the device has the approval Underwriters' Laboratories of Chicago.

lock holds the steering gear rigid at any angle, and e makes driving or towing impossible. As the still be readily pushed short distances, it does not e with police and fire department regulations. The ject of the lock, of course, is to prevent theft ar.

e illustration *A* is a 19 tumbler lock which locks when in the proper position by removing the is a lever, used to raise and lower the clogging *C* and *E*. *C* is a steel tube, attached to the clog at the spline at *E*. *D* is the spline fitting, which d or cast into the worm gear housing, and *F* is the machine-steel four-spline, screwed into the tube *C* and secured with a key.

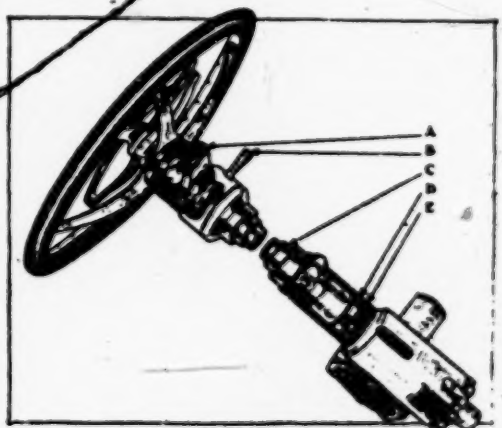

S. S. C. O. steering gear lock illustrating its important features

1669-1678

Tightly Bound

BLANK PAGE

[fols. 1679-1682] **DEFENDANTS' EXHIBIT 4-H(3)**

Prior Art Patent

U. S. Patent No. 1,031,212, July 2, 1912

To E. Van Bever

Expansible Piston

(Filed January 27, 1934)

E. VAN BEVER.

EXPANSIBLE PISTON.

APPLICATION FILED SEPT. 18, 1911.

1,031,212. Patented July 2, 1912.

Fig. 1.

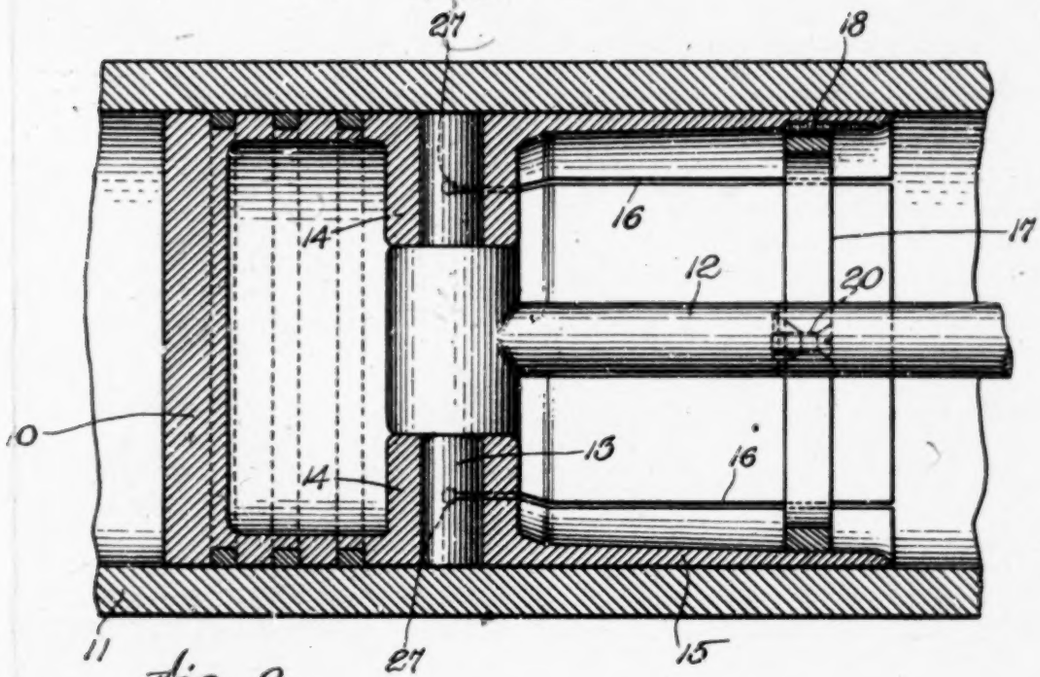

Fig. 2.

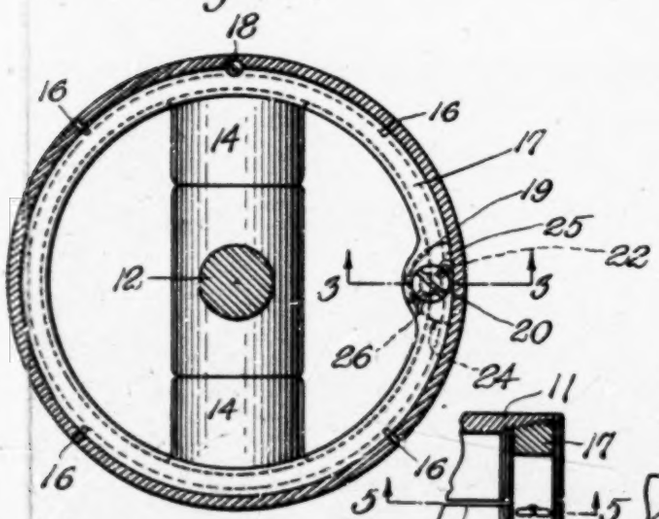

Fig. 3.

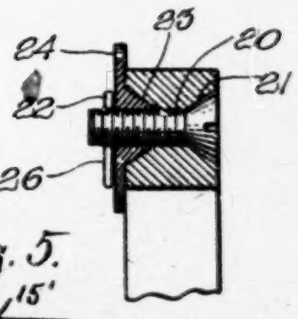

Fig. 4.

Fig. 5.

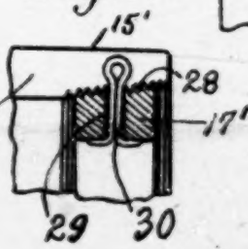

Witnesses:
C. L. Rogers
Edward Maxwell

Inventor:
Edmond Van Bever,
by Geo. S. Maxwell,
Attorney.

UNITED STATES PATENT OFFICE.

EDMOND VAN BEVER, OF WATERTOWN, MASSACHUSETTS.

EXPANSIBLE PISTON.

1,031,212. Specification of Letters Patent. Patented July 2, 1912.

Application filed September 18, 1911. Serial No. 649,889.

To all whom it may concern:

Be it known that I, EDMOND VAN BEVER, a citizen of the United States, and resident of Watertown, county of Middlesex, Commonwealth of Massachusetts, have invented an Improvement in Expansible Pistons, of which the following description, in connection with the accompanying drawings, is a specification, like letters on the drawings representing like parts.

This invention relates to pistons and, while applicable to other and more general uses, is especially designed for use in gas engine construction.

As is well known, the ordinary engine piston or plunger, though it may have been originally formed to closely fit its cylinder, after a period of use wears down to a certain extent and this, along with the wear of the cylinder, makes the piston a loose fit in the cylinder so that it tends to have some small lateral chucking play therein, which is only imperfectly prevented by the packings. This looseness of the piston in its cylinder tends to the premature destruction of the packing rings, as well as requiring special attention to the fitting of these.

The present construction provides a piston formed so as to be expansible from within to take up for the small diminution in its diameter due to wear, so that, even after a considerable period of use, its peripheral dimension may be the same as at the beginning.

The invention will be better understood from the following detailed description taken in connection with the accompanying drawings and will thereafter be pointed out in the appended claims.

Referring to the drawings, Figure 1 is a central longitudinal section showing a piston wherein my invention is carried out, a portion of the cylinder being shown broken away. Fig. 2 is a transverse section taken at the right of Fig. 1, portions of the piston being shown in elevation. Fig. 3 is a detail section on line 3—3 of Fig. 2. Fig. 4 is a fragmentary sectional detail showing another form of expanding mechanism, and Fig. 5 is a section on line 5—5 of Fig. 4.

The piston 10, usually of cast iron, is shown as of the integral hollow shell type with its outer end closed and is fitted to the cylinder 11 and united to a connecting rod 12 by wrist pin 13 fitted to sockets in bosses 14 projecting inward from the hollow shell intermediate of its length. The hollow shell of the piston, as is usual, extends rearwardly for some distance from the wrist pin connection as seen at 15, this rearwardly extending portion being slightly tapered so as to terminate in a relatively thin inner extremity. In the practice of my invention this hollow shell, for a considerable distance from its inner end, is divided into a number of sections, shown as four, by lengthwise slits 16. These slits, which, in the illustrative embodiment shown, extend substantially to the wrist pin connection, though the exact length thereof is not material, may be readily formed by sawing the piston shell with an ordinary metal saw. These sectional portions have a certain amount of springing capacity which need only be very slight for the present purpose, and as a means for expanding them outward to the small extent necessary, I provide an expanding ring 17 fitted into the piston sleeve and held from casual displacement by means shown as a screw bolt 18 tapped in a hole partly in the ring and partly in the piston shell. The ring 17 is divided at the point 19 and the abutting ends at this point are adapted to be forced apart by a screw bolt 20 fitted to a hole formed in the abutting ends, this bolt having a conical head 21 and having fitted thereto a nut 22 with a conical head 23. Thus as the nut 22 is screwed up on the bolt 20, the conical portions 21, 23 force the abutting ring ends apart, causing expansion of the ring and corresponding expansion of the sectional portions of the piston shell. As a means for preventing casual displacement of the nut 22, it is formed with an abutment plate 24 flattened off, as seen at 25 to fit the inside of the piston shell. The screw bolt 20 is likewise prevented from casual displacement after adjustment by having a cotter pin 26 passed through a transverse aperture in its end with its extremity in position to press against the inside of the piston shell, so that both the screw bolt and its nut are thus held against movement, and any desired expanding adjustment of the piston once effected is reliably maintained.

The form of expanding mechanism just described is especially applicable for equipping worn pistons with my invention, since it does not require any machining of the piston. In the case of new pistons which can be conveniently machined the expand-

ing device of Fig. 4 and Fig. 5 may be advantageously employed. As shown in these figures, the inner end 15′ of the piston, which is provided with slots 16 as before described, has an internal tapered thread formed therein as seen at 28, and engaging with this thread is a ring 17′ having a correspondingly tapered and threaded outer periphery. This ring may be screwed into the piston end to expand the sectional portions thereof to the extent desired, and as a suitable means for preventing the working out of this ring, I provide radial holes 29 therethrough at intervals through one or more of which a cotter pin 30 is passed so that its head extends up into a slot 16 without reaching the periphery of the piston, while its inwardly projecting ends may be bent over the ring to prevent dislodgment. Thus the head of the cotter pin engaging with the walls of the slot 16 effectively prevents any turning of the ring and holds the parts in precise adjusted position. The resiliency effected by the slits 16 may be somewhat enhanced if desired by the drilling of holes 27 in the extremities of these slits, though this is not essential to the effective carrying out of the invention.

It will be understood that while a cast iron piston of usual form is shown for illustrative purposes in setting forth the principles of my invention, the invention is not limited to this one form of piston, but may be carried out with various different piston and plunger constructions. The invention is likewise adapted for use in the production of new pistons or for the refitting of old and worn plungers. In the case of a plunger worn by use, all that is necessary is to remove it, saw the slits 16 from its inner end, select an expanding ring of proper size, and fit it to the inside of the shell, this fitting being facilitated by the usual tapering form of the standard types of hollow shell piston from the wrist pin inward.

Having described my invention, what I claim as new and desire to secure by Letters Patent is:

1. A piston formed with a hollow shell integral with the main body thereof, there being slits lengthwise through the shell from its inner end, and means for expanding the sectional portions thus formed to take up for wear.

2. A piston formed with a hollow shell integral with the main body thereof, there being a plurality of equally spaced apart lengthwise slits through the inner end portion of the shell, and an internal expander for the sectional shell portions thus formed.

3. A piston, having an inwardly extending shell portion integral therewith with a plurality of equally spaced apart lengthwise extending slits therethrough, and an internal expander for springing out and holding in expanded adjustment the sectional shell portions thus formed.

4. A piston, having a wrist pin fitted to inwardly projecting bosses thereof, and a shell portion extending inwardly from said wrist pin integral with the body of the piston, said shell portion being sectioned by a plurality of equally spaced apart slits into segmental portions, and an internal expanding ring fitted to the interior of said sectional shell portions.

5. A hollow shell piston, having inwardly extending bosses with a wrist pin fitted therein, and a shell portion integral with the piston body extending inwardly from said wrist pin, said integral shell portion having a lengthwise extending slit therethrough, and an internal expander fitted to expand said inwardly extending shell portion.

6. A piston, comprising an integral hollow shell portion with a slot extending lengthwise therethrough for a part of its length, and means for expanding said shell portion to take up for wear.

7. An integral hollow shell piston, having slits lengthwise through the shell from its inner end, and means for expanding the sectional portions thus formed to take up wear, said means consisting in a tapered threaded ring fitted to a tapered threaded seat in the end of the piston.

8. An integral hollow shell piston, having slits lengthwise through the shell from its inner end, and means for expanding the sectional portions thus formed to take up wear, said means consisting in a tapered threaded ring fitted to a tapered threaded seat in the end of the piston, said ring having a radially extending hole therethrough with a pin passed through said hole and engaging with the walls of one of said slits.

In testimony whereof, I have signed my name to this specification, in the presence of two subscribing witnesses.

EDMOND VAN BEVER.

Witnesses:
CLYDE L. ROGERS,
EDWARD MAXWELL.

[fols. 1683-1686] **DEFENDANTS' EXHIBIT 4-H(4)**

Prior Art Patent

U. S. Patent No. 1,092,870, April [illegible], 1914,

To E. O. Spillman & L. P. Mooers

Piston for Explosion Engines for Motors

(Filed January 27, 1934)

E. O. SPILLMAN & L. P. MOOERS.

PISTON FOR EXPLOSION ENGINES OR MOTORS.

APPLICATION FILED JULY 18, 1913.

1,092,870.

Patented Apr. 14, 1914.

Fig. 1.

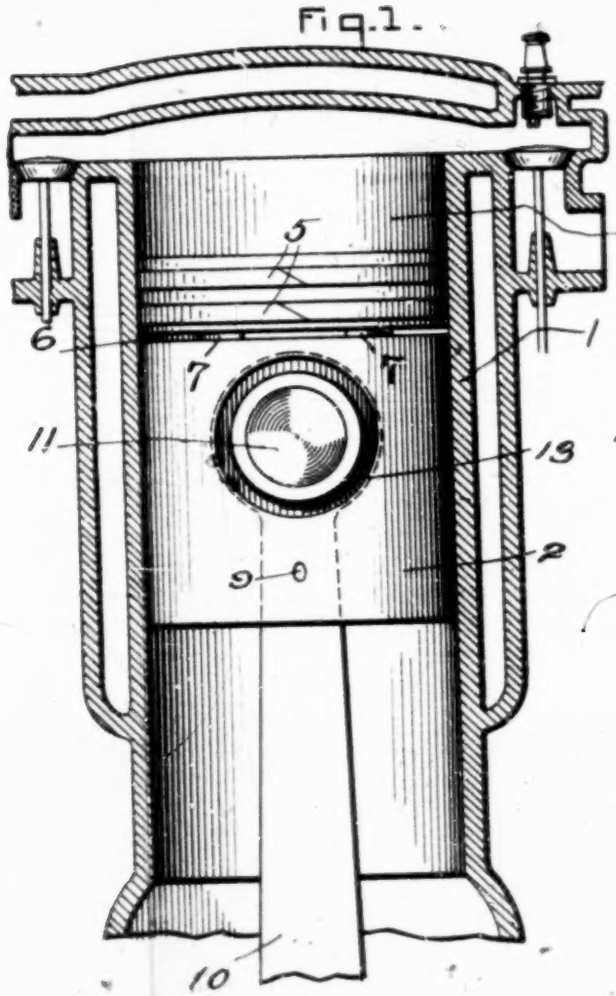

Fig. 2.

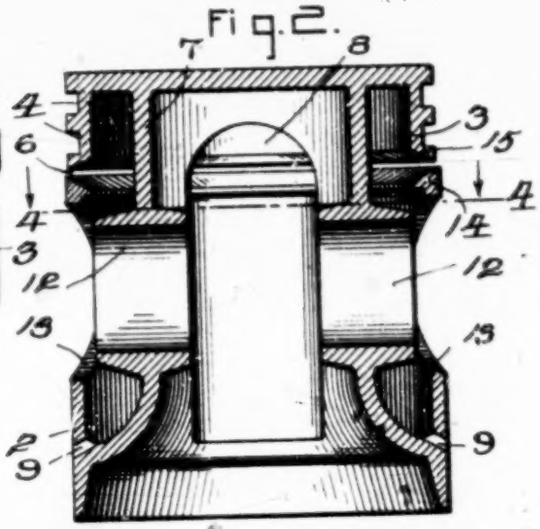

Fig. 3.

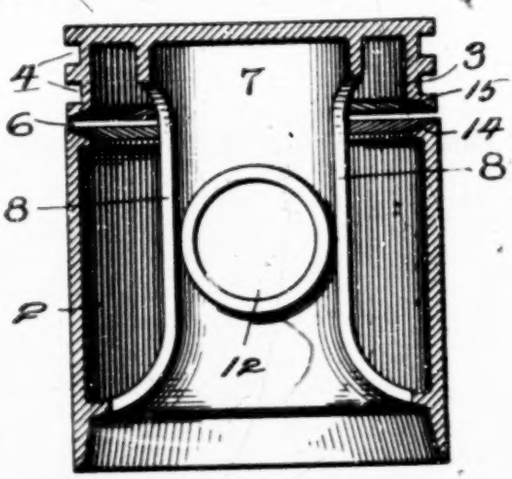

Fig. 4.

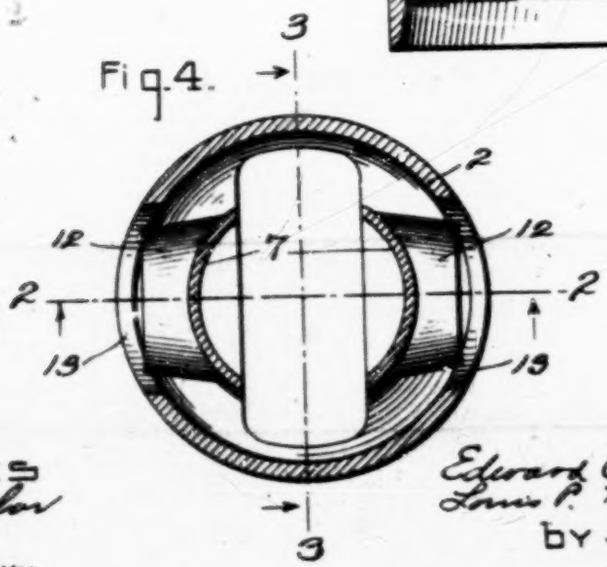

WITNESSES

M. Ray Taylor

Walter O. Geyer.

INVENTORS

Edward O. Spillman.

Louis P. Mooers.

BY Geyer Popp

ATTORNEYS

UNITED STATES PATENT OFFICE.

EDWARD O. SPILLMAN AND LOUIS P. MOOERS, OF NORTH TONAWANDA, NEW YORK.

PISTON FOR EXPLOSION ENGINES OR MOTORS.

1,092,870. Specification of Letters Patent. Patented Apr. 14, 1914.

Application filed July 18, 1913. Serial No. 779,757.

To all whom it may concern:

Be it known that we, EDWARD O. SPILLMAN and LOUIS P. MOOERS, citizens of the United States, residing at North Tonawanda, in the county of Niagara and State of New York, have invented new and useful Improvements in Pistons for Explosion Engines or Motors, of which the following is a specification.

This invention relates more particularly to the pistons of explosion engines or motors.

As ordinarily constructed, the head and the body of the piston are integral or continuous, and the head, which is subjected to the full heat of the gas, transmits the same to the body. The resulting expansion of the body causes the same to bind in the cylinder, scoring or grooving the latter in time; or if the piston-body is fitted loosely enough to avoid scoring, it rattles in the cylinder and fails to compress the explosive mixture to the proper degree, impairing the efficiency of the motor.

It is the object of our invention to so construct the piston that the conduction or transmission of heat from the head to the body or guide portion of the piston is reduced to a minimum. Expansion of the body is thus diminished practically to that of the cylinder and the body may be closely fitted therein, thereby obtaining the maximum efficiency of the motor, avoiding rattling of the piston, and at the same time preventing scoring of the cylinder.

In the accompanying drawings: Figure 1 is a sectional elevation of a motor provided with the improved piston. Figs. 2 and 3 are longitudinal sections of the piston on the correspondingly numbered lines in Fig. 4, the packing rings being omitted. Fig. 4 is a transverse section thereof on line 4—4, Fig. 2.

Similar characters of reference indicate corresponding parts throughout the several views.

1 indicates a motor cylinder of any ordinary construction, the cylinder forming no part of our invention.

2 indicates the body or guide-portion of the piston, and 3 the head or front portion thereof which is shown as having the customary annular grooves 4 for receiving the usual packing rings 5.

The wall of the head, instead of being integral or continuous with the wall of the body, is isolated or separated from it by a gap or space 6 of suitable width to avoid or minimize transmission of the heat from said head-section to said body or guide-section and thereby prevent objectionable expansion of the latter. This gap may be produced by a saw cut made after machining and before grinding the piston.

The head and guide sections of the transversely-divided piston are tied together by any suitable connection, that shown in the drawings consisting of a tubular longitudinal web 7 arranged within the hollow sections and cast in one piece therewith.

In the construction illustrated in the drawings, the web is separated from the surrounding walls of the head and guide sections by a comparatively wide space, and the upper end of this connecting web joins the back of the head section, while its lower end joins the guide-section near its lower end or at a point remote from the non-conducting gap 6, whereby the amount of heat transmitted through the web from the head to the guide-section is reduced to a negligible degree, not only on account of the remoteness of the lower end of the web from the gap, but because the web is constantly cooled by the large volume of oil in the crank case. To permit circulation of the lubricant through the web and also reduce the weight of the piston, the web may be provided in opposite sides with openings 8, but these openings are not essential and the web may be imperforate, if desired. Oil holes or channels 9 may also be extended through the guide-section above the lower end of the web, as shown.

10 indicates the usual connecting rod of the motor and 11 the wrist-pin journaled in suitable bearings 12, which in the preferred construction shown, are integral with the web 8, as seen in Fig. 2. Opposite and in line with these bearings the guide-section may be provided with openings 13 for lubricating purposes.

The guide-section 2 is of the proper diameter to closely fit the cylinder and obtain the maximum efficiency of the motor, while the head-section 3 is sufficiently smaller in diameter than the guide-section to remain out of contact with the cylinder-wall under the maximum expansion of the head-section; this close fit of the guide section being permitted without danger of scoring the cylinder, by reason of the isolation of its wall

or skirt from the wall of the head-section, which prevents undue expansion of the guide-section, as hereinbefore described. The body-section is long or extensive relative to the head-section and acts as a guide or cross-head therefor which receives all the side thrust of the connecting rod and keeps the head-section out of contact with the cylinder-wall at all times, causing it to operate freely and noiselessly.

As shown, the guide-section is extended forwardly or upwardly beyond the wrist-pin and in practice preferably terminates about a sixteenth of an inch short of the inner end of the head-section to leave the isolating gap 6.

This improved construction combines the important advantages of maximum engine efficiency, smooth and noiseless action of the piston and non-scoring of the cylinder; and these are obtained by simple means which do not materially increase the cost of the piston.

Preferably the upper edge of the piston body is beveled or inclined toward the axis of the piston, as shown at 14, while the lower edge of the piston-head is beveled in the reverse direction, as shown at 15. By this construction, on the upward stroke of the piston the lower beveled edge 14 deflects or crowds the surplus oil back into the piston, while on its downward stroke, the upper beveled edge 15 performs the same function.

We claim as our invention:

1. A piston comprising a head-section, a guide-section having its peripheral wall isolated from the corresponding wall of the head-section by a non-conducting gap extending practically around the piston, the guide-section being relatively long to form a cross head, and means connecting said sections.

2. A piston comprising a head-section, a guide-section forming a cross head and having its wall isolated from the wall of the head-section by a narrow non-conducting gap, and means connecting said sections.

3. A piston comprising a head-section, a separate guide-section therefor, means connecting said sections, and a wrist-pin bearing, the wall of the guide-section extending forwardly beyond the wrist-pin bearing and terminating short of said head-section to leave a non-conducting gap between said sections.

4. A piston comprising a head-section, a guide-section having its wall isolated from the wall of the head-section by a narrow non-conducting gap, and a web arranged lengthwise within said guide and head-sections and connecting the same, said web being located at a distance from the walls of said sections.

5. A piston comprising a head-section, a relatively long guide-section having its wall isolated from the wall of the head-section by a non-conducting gap, and an internal web connecting said sections and joining the guide-section at a point remote from said gap.

6. A piston comprising a head-section, a guide-section isolated from the head-section by a non-conducting gap, said guide-section being provided in opposite sides with openings, an internal web connecting said head-section with the guide-section, and wrist-pin bearings mounted on said web in line with said openings and isolated from the wall of the guide-section and the edges of said openings.

7. A piston comprising a guide-section, a head-section isolated from the guide section by a non-conducting gap, and a tubular web arranged within said sections and connecting the same, the web being provided with one or more oil openings.

8. A piston comprising a guide-section, a head-section isolated from the guide-section by a non-conducting gap, and an internal tubular web connecting said sections and separated from the surrounding piston-wall, said wall being provided with oil holes.

9. A piston comprising a guide-section, a head-section separated therefrom by a gap, and means within the piston connecting said sections, that end of the guide-section forming the rear edge of said gap being provided with an oil deflecting face.

10. A piston comprising a guide-section, a head-section separated therefrom by a gap, and means within the piston connecting said sections, that end of the guide-section forming the rear edge of said gap being beveled to slope toward the axis of the piston.

11. A piston comprising a guide-section, a head-section separated therefrom by a gap, and means within the piston connecting said sections, the adjacent ends of the said sections being beveled inwardly in opposite directions.

Witness our hands this 11th day of July, 1913.

EDWARD O. SPILLMAN.
LOUIS P. MOOERS.

Witnesses:
C. F. GEYER,
E. M. GRAHAM.

[fols. 1687-1716] **DEFENDANTS' EXHIBIT 4-H(5).**

Prior Art Patent.

U. S. Patent No. 1,153,902, Sept. 21, 1915,

To G. E. Franquist.

Piston.

(Filed January 27, 1934.)

698

G. E. FRANQUIST.

PISTON.

APPLICATION FILED AUG. 1, 1914.

1,153,902. Patented Sept. 21, 1915.

Fig. 1.

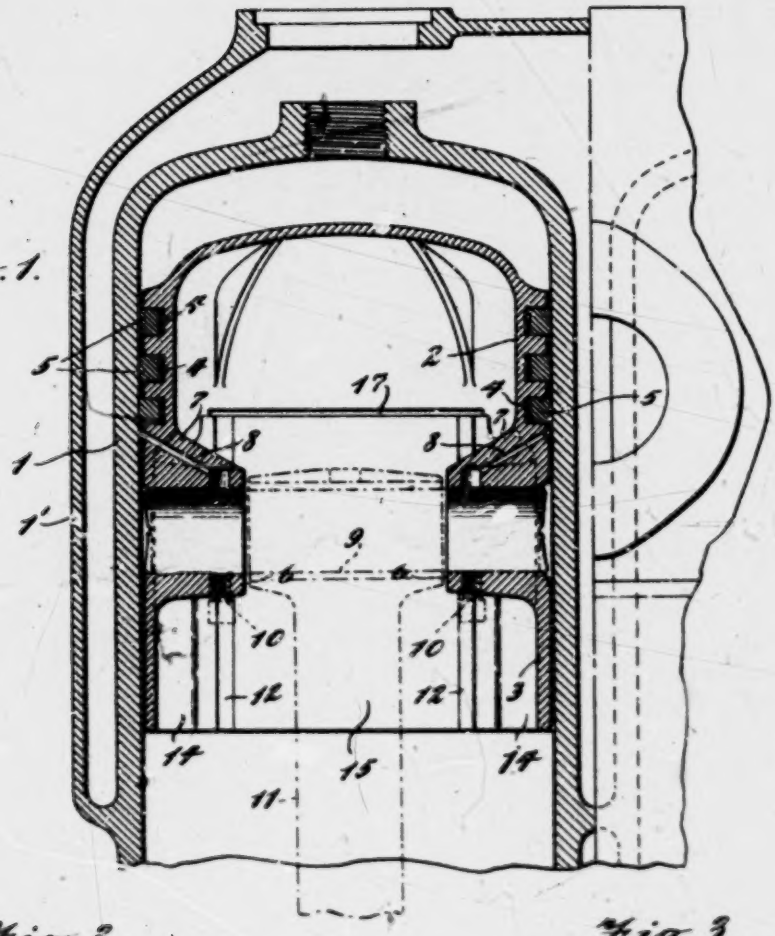

Fig. 2.

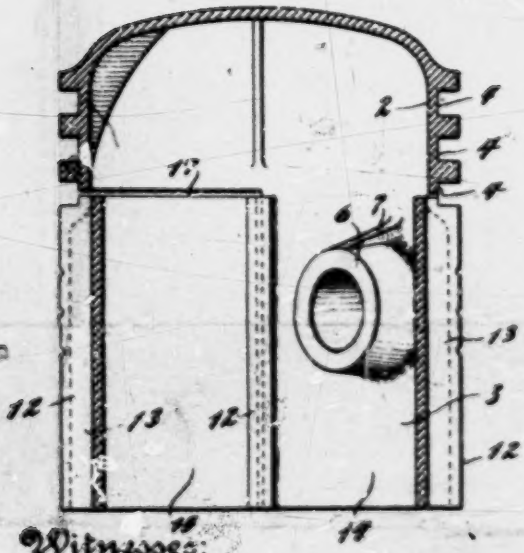

Fig. 3.

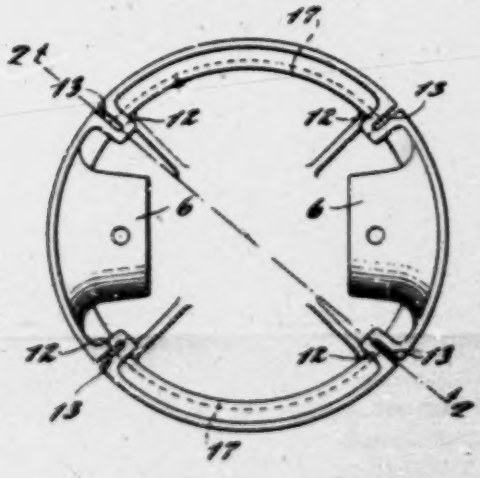

Witnesses:
Geo. L. Lehmann
Henry Barkley

Inventor
Gustave E. Franquist.

By his Attorneys
Rosenbaum, Stockbridge & Boot

UNITED STATES PATENT OFFICE.

GUSTAVE E. FRANQUIST, OF NEW BRUNSWICK, NEW JERSEY.

PISTON.

1,153,902. Specification of Letters Patent. Patented Sept. 21, 1915.

Application filed August 1, 1914. Serial No. 854,484.

To all whom it may concern:

Be it known that I, GUSTAVE E. FRANQUIST, a citizen of the United States, residing at New Brunswick, in the county of Middlesex and State of New Jersey, have invented certain new and useful Improvements in Pistons, of which the following is a full, clear, and exact description.

This invention relates to internal combustion engines and has for its primary object the provision of a piston which will eliminate the piston clatter at all speeds and temperatures of the motor.

With this object in view, the invention consists of a piston having a sleeve which is circumferentially compressible and is adapted to have a snug sliding fit in the cylinder when cold, so that upon an expansion of the piston its sleeve will automatically yield sufficiently to prevent the piston from sticking in the cylinder, and after the cylinder has also expanded will again automatically resume substantially its normal size and take up the free play between the cylinder and piston, which would otherwise occur.

The invention also consists of the constructions which will be hereafter described in detail and particularly pointed out in the appended claims.

In the accompanying drawings Figure 1 shows a central longitudinal section through a cylinder and a piston constructed in accordance with the principles of this invention; Fig. 2 is a central longitudinal section of the piston on the line 2—2 shown in Fig. 3; and Fig. 3 is a bottom plan.

Referring to the drawings, 1 designates broadly the cylinder and 1′ the water jacket of an internal combustion engine, the particular construction of which forms no part of the present invention. The piston shown may be regarded as comprising two parts, a head 2 and a sleeve 3, the head extending rearwardly to the rear end of the rearmost piston ring, while the remaining portion of the piston constitutes the sleeve. The head of the piston is provided with circumferential grooves 4 in which the piston rings 5 are adapted to be loosely fitted. Extending inwardly from the inner peripheral surface of the sleeve at diametrically opposed points are the piston pin bosses 6. These bosses are provided with ribs 7 through which an oil groove or hole 8 is bored in order to supply the lubricating material to a crank pin 9, which is suitably fitted in journals provided in these bosses, and is held in place therein by set screws 10. The pin 9 carries a connecting rod 11, the construction thus far described being typical of the ordinary hollow "trunk" piston.

As is the usual practice, the circumferential surface of the head of the piston, or that portion which lies between the piston rings, is machined so as to fit very loosely within the cylinder to permit an expansion of the piston when heated, and is usually from .010 to .020 of an inch less in diameter than the diameter of the cylinder. The piston rings are also fitted in the grooves to allow them to have some lateral movement. The head of the piston does not therefore serve to prevent the piston from rattling within the cylinder. It is necessary then to depend upon the sleeve of the piston to prevent the rattling or clapping of the piston within the cylinder and heretofore it has been customary to allow .002 to .005 free play between the sleeve of the piston and the cylinder to take care of the expansion of the piston before the cylinder walls become heated and to prevent the piston from sticking. After the engine has been running for a comparatively long period the cylinder walls expand, since the water in the jacket becomes heated and the same necessity for compensating for the expansion of the piston does not arise. When the sleeve fits as loosely as this within the cylinder, the piston will set up a rattling and clapping in the cylinder while it remains comparatively cool, *i. e.*, while the motor is picking up, and against after the cylinder has expanded so that the noise resulting therefrom may be heard by the driver and occupants of the car, if the internal combustion engine is used on an automobile. In order to prevent this rattling, it is proposed to use a piston having a sleeve which is circumferentially compressible so that it may be fitted snugly to the cylinder when cold and will automatically take care of the expansion of the piston. One embodiment of such a construction is shown in the drawings and will now be described. Projecting inwardly from the inner surface of the sleeve are longitudinal ribs 12 which preferably extend the entire length of the sleeve substantially parallel to the axis of the piston to a point on a level with the middle of the rearmost piston ring. Longitudinal slots 13 are cut in the outer surface of the sleeve and extend into these ribs, form-

ing the longitudinal grooves in the same. These slots divide the sleeve of the piston into longitudinal sections 14—14 and 15—15, the sections 14—14 carrying the piston pin bosses 6.

Circumferential slots 17—17 are cut in the outer surface of the sleeve in the sections 15—15 respectively, which slots extend to and join the longitudinal slots of 13, separating the longitudinal sections 15 from the head of the piston. The sections 14—14 which carry the piston pin bosses remain integrally connected to the piston head 2 and are relieved from a point on a level with the rearmost piston ring to a point below the piston pin bosses, approximately .005 of an inch on the side, to insure that upon the expansion of the piston the portion of the sleeve which carries the bosses will be prevented from sticking to the cylinder walls and causing either the motor to stop, or the breakage of the parts. In machining a piston of this character, the sleeve is given a relatively snug sliding fit within the cylinder even when cold; or in other words, the piston may be so accurately fitted to the cylinder that even when the piston is cold and the motor is starting there will be no rattling or undesirable noises produced by the actuation of the piston as the motor picks up and the temperature of the piston rises. Due to high temperature of the explosive gases the piston will commence to expand and the cylinder walls will therefore exert a pressure on the same which must be relieved in order to prevent the piston from sticking. It is obvious, however, that as the piston expands the longitudinal sections 15—15 which are separated from the head of the piston and the other portions of the sleeve, by the slots 13 and 17, will move inwardly under the pressure which is exerted on these sections by the cylinder walls until the slots 13 and 17 are closed. However, these slots are made sufficiently large to insure that this will not occur. The rear ends of the sections 14—14 will yield similarly to sections 15—15. It is obvious, then, that the only portions of the sleeve which cannot yield due to the pressure exerted by the cylinder walls on the expanding piston, are those portions of the sleeve opposite the piston pin bosses, and, as has already been stated, these portions of the sleeve are relieved .005 of an inch or more on the side so that there will be no liability of these portions of the sleeve sticking to the cylinder walls. The circumference of the piston will therefore be decreased the desired degree and the piston will operate within the cylinder without sticking, while maintaining a snug sliding fit therein which will prevent any rattling. After the motor has been running a comparatively long period of time the water in the jacket becomes heated and the cylinder expands, but any free play which would otherwise occur will be taken up by the sections of the sleeve which have been compressed resuming their normal position. Another advantage of a sleeve of this character is that in a multi-cylinder engine it is customary to connect one or more of the cylinders together, which, when the cylinders expand, will cause a distortion of the cylinders from a true circle in cross section. By making the sleeve compressible in the manner described, any distortion of the cylinder will cause one or more sections of the piston to yield and the sticking of the piston which has heretofore taken place will be obviated.

While I have shown a particular embodiment of my invention for constructing a piston which is adapted to be compressed circumferentially under the pressure which is exerted by the cylinder walls upon the sleeve of an expanding piston, yet it is not my intention to be limited to the particular construction shown, as the invention is capable of various modifications and it is my intention to cover broadly a piston having a sleeve which is adapted to be compressed circumferentially by the pressure exerted by the cylinder walls when the piston is expanding so that the piston will at all speeds and temperatures of the motor, have a snug sliding fit within the cylinder, which will prevent any rattling of the piston.

What I claim as new and desire to secure by Letters Patent, is:

1. In combination with the cylinder of an internal combustion engine, a piston comprising a head and a sleeve, said sleeve being automatically circumferentially compressible under the pressure exerted by the cylinder walls upon said sleeve when said piston expands.

2. In combination with a cylinder for an internal combustion engine, a piston comprising a head and a sleeve integral therewith, said sleeve being automatically compressible under the pressure exerted by the cylinder wall upon said sleeve when said piston expands.

3. A piston for internal combustion engines, having a head and a sleeve integral therewith, said piston having a circumferential slot therein separating a portion of said sleeve from said head and longitudinal grooves in said piston joining said circumferential slot, forming a section of said sleeve capable of bodily movement relative to the remainder of said sleeve.

4. A piston for internal combustion engines, comprising a head and a sleeve integral therewith, said piston having a circumferential slot therein dividing a portion of said sleeve from said head, longitudinal ribs formed on the inner peripheral surface of said sleeve, said ribs having longitudinal

grooves therein, joining said circumferential slot.

5. A piston for internal combustion engines, comprising a head and a sleeve integral therewith, said piston having a circumferential slot therein on a level with the rearmost piston ring, and ribs on the interior surface of said sleeve extending from the bottom of said sleeve to said slot, said ribs having longitudinal grooves therein joining the ends of said circumferential slot.

6. A piston for internal combustion engines, having a head and a sleeve, said sleeve having a rib on its inner surface extending the entire length of said sleeve, said sleeve having a slot therein extending into said rib and forming a longitudinal groove therein.

7. In an internal combustion engine, a cylinder, a piston therein comprising a sleeve having a snug sliding fit in said cylinder at all temperatures of said piston.

8. In an internal combustion engine, a cylinder, a piston comprising a head and sleeve, said sleeve having the portions thereof whose peripheral surfaces are in sliding contact with the walls of said cylinder automatically circumferentially compressible under the pressure exerted by said cylinder walls upon said sleeve when said piston expands.

9. In an internal combustion engine, a cylinder, a piston comprising a head and a sleeve integral therewith, said sleeve having the portions thereof whose peripheral surfaces are in sliding contact with the walls of said cylinder automatically circumferentially compressible under the pressure exerted by the said cylinder walls upon said sleeve when said piston expands.

10. In an internal combustion engine, a cylinder, a piston comprising a head and a sleeve, piston pin bosses projecting from the interior of said sleeve at a point adjacent the head of the piston, said sleeve comprising longitudinal sections some of which are bodily movable inwardly under the pressure exerted by the walls of said cylinder upon the same as the piston expands, and others of which, which carry the piston bosses, having the portions thereof extending outwardly from the piston bosses toward the free end of the sleeve also bodily movable and having their surfaces opposite the piston bosses of reduced diameter so that these portions are not in sliding contact with the walls of the cylinder.

11. In an internal combustion engine, a cylinder, a piston therefor, a head and a sleeve integral therewith, piston pin bosses extending from the interior surface of said sleeve, said piston having a circumferential slot therein on a level with the rearmost piston rim, and ribs on the interior surface of said sleeve extending from the bottom of said sleeve to said slot, said rib having longitudinal grooves therein joining the ends of said circumferential slot, and the external surface of said sleeve being relieved opposite the piston pin bosses whereby said portions of the sleeve do not contact with the cylinder walls.

In witness whereof I subscribe my signature in the presence of two witnesses.

GUSTAVE E. FRANQUIST.

Witnesses:
WALDO M. CHAPIN,
JULE ZELENKO.

BLANK PAGE

[fols. 1717-1726] **DEFENDANTS' EXHIBIT 4-H(11).**

Prior Art Patent.

U. S. Patent No. 1,294,833, Feb. 18, 1919,

To H. R. Ricardo.

Piston for Internal Combustion Engines.

(Filed January 27, 1934.)

703

H. R. RICARDO.

PISTON FOR INTERNAL COMBUSTION ENGINES.

APPLICATION FILED APR. 23, 1918.

1,294,833. Patented Feb. 18, 1919.

FIG. 1.

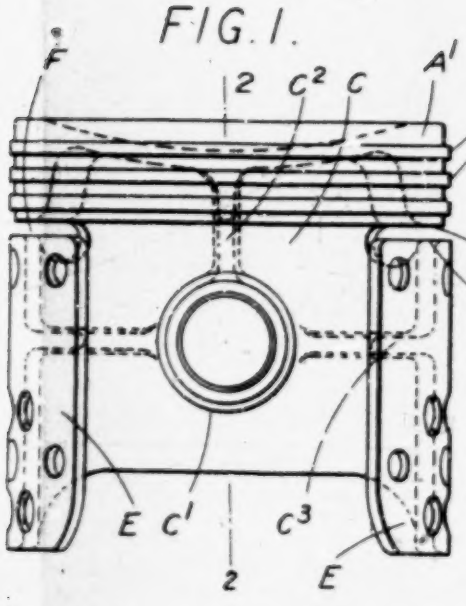

FIG. 2.

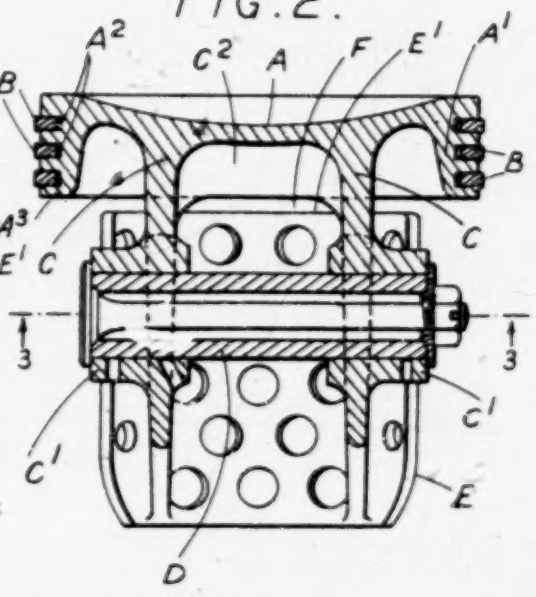

FIG. 3.

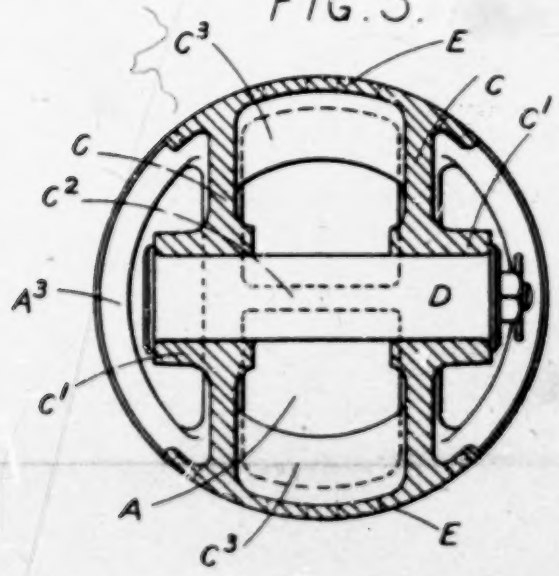

Inventor.
Harry R. Ricardo,
By Fosket, Freeman, Watson & Coit,
Attorneys.

UNITED STATES PATENT OFFICE.

HARRY RALPH RICARDO, OF LONDON, ENGLAND.

PISTON FOR INTERNAL-COMBUSTION ENGINES.

1,294,833. Specification of Letters Patent. Patented Feb. 18, 1919.

Application filed April 23, 1918. Serial No. 230,355.

To all whom it may concern:

Be it known that I, HARRY RALPH RICARDO, a subject of the King of England, residing at London, in England, have invented certain new and useful Improvements in Pistons for Internal-Combustion Engines, of which the following is a specification.

This invention relates to pistons for internal combustion engines and has for its object to effect certain improvements in a known type of piston in which the piston head performs solely piston functions while the guiding is performed by members disposed on either side of the gudgeon pin, these guide members being extensions from the piston head flange.

In the design of piston for internal combustion engines, more especially pistons which are constructed of aluminium or aluminium alloy one of the difficulties which arises is due to the large clearance that must be allowed between the piston and the cylinder walls in order to permit of expansion. In an aluminium piston of normal design if sufficient provision is made to allow for expansion when the piston attains its highest temperature the clearance when the parts are cold is then so great that considerable noise is caused as the annular thrust of the connecting rod is reversed on passing the dead centers and consequently the piston is thrust from one side of the cylinder to the other, causing noise. By means of the present improvements this noise is reduced, as the piston is so designed that a large working clearance is not required.

According to this invention the piston comprises a flanged head of such diameter that it is a loose fit within the cylinder, with the wall of which it does not come in contact, the flange being provided with grooves in which are piston rings, and a guide portion which is a sliding fit in the cylinder and comprises two curved members or slippers between which lies the gudgeon pin. This guide portion is adapted to take the whole of the side thrust from the connecting rod and each of the curved members is separated by a continuous gap from the adjacent edge of the piston head flange. Webs carry the gudgeon pin and constitute the only connection between the curved guide members and the face of the piston head disk, with all of which parts the webs are integral. The arrangement of the webs is such that heat will be so conveyed from the piston head to the slippers as to be distributed equally over the whole surfaces of the slippers. The webs comprise two main members which may or may not be arranged parallel and are integral with and spring from the face of the piston head disk, each main portion of these webs being formed with a boss adapted to carry the gudgeon pin. The two curved guide members or slippers are oppositely disposed so as to inclose the gudgeon pin bosses, these slippers being as mentioned connected to and formed integral with the webs and through the latter connected to the piston head and gudgeon pin bosses.

The accompanying drawings illustrate by way of example one construction of piston in accordance with the present invention. In these drawings,

Figure 1 is a side elevation of the improved piston.

Fig. 2 is a sectional elevation on the line 2—2 of Fig. 1.

Fig. 3 is a transverse section on the line 3—3 of Fig. 2 looking in the direction of the arrows.

Like letters indicate like parts throughout the drawings.

The head of the piston comprises a disk portion A which is conveniently dished as shown in Fig. 2, and a flange A′, the diameter of which is such in relation to the internal diameter of the cylinder that a large clearance is provided and the piston head will not come at all in contact with the cylinder walls. In the flange A′ are grooves A^2 in which are carried piston rings B. Two main webs C spring from the piston head A across which they extend and with which they are formed integral. These webs C are parallel to each other in the construction shown in the drawings and project to a convenient distance from the head of the piston head. In each web C is formed a boss C′ adapted to carry the gudgeon pin D which may be of suitable construction and either adapted to float in the bosses C′ or be fixed therein as found desirable. On either side of the gudgeon pin bosses C′, the webs C extend laterally and unite with two curved guide or slipper members E which are integral with the webs so that the latter constitute the connection between the slipper members and the piston head A. It is desirable to provide also a small central

transverse web C^2 which springs from the face of the piston head A and lies between and connects with the parallel webs C. Small supplementary webs C^3 are also conveniently provided across the inner side of the guide slippers E and between the webs C with each of which parts these supplementary webs C^3 are integral.

As will be clearly seen in Figs. 1 and 2, the upper edge E′ of each curved guide member E is separated by an unbroken continuous gap F from the adjacent opposed edge A^3 of the piston head flange A′. Thus while the guide members E are rigidly connected to the piston head A they are not in contact with the piston head flange.

Holes are preferably made through the slippers E as shown in Figs. 1 and 2.

The two webs C serve to distribute both the pressure and the heat delivered to the crown of the piston. The whole of the thrust and such heat as thus passes through the webs C are transmitted to the guide members E and distributed equally over them owing to the manner in which the guide members are joined to the webs C. By reason of the guide members E being separated at their edges from the piston head, heat can only pass from the latter to the guide members through the webs C and then only in such a manner as to effect satisfactory and equal distribution of the heat over the guide surfaces. Moreover the total amount of heat delivered to the bearing surfaces of the guide members is reduced and these surfaces can be freely lubricated. As a result of the reduced heat flow to the crosshead portion of the piston, which is composed of the guide members E and more especially as a result of the even distribution of heat over all the guide surfaces it becomes possible to provide a less clearance for expansion. In the case of a normal construction of piston the heat is transmitted from the piston head along the trunk and consequently the heat which flows through the upper part of the trunk immediately beyond the piston rings is excessive while toward the lower or outer end of the trunk the heat is relatively slight.

Though the present invention is more especially intended to be employed in the construction of a piston formed of aluminium or aluminium alloy, it is to be understood that it is equally applicable to a piston formed of cast iron, the details of construction being modified or not as found necessary.

The shape and dimensions of the slipper members may be varied as also the other details of the construction such as the width of the gap between the slipper members and the piston head flange and the shape and disposition of the webs. Thus for example the bearing surface of one slipper member may have a greater area than the bearing surface of the other slipper member, the two slipper members then being conveniently of different widths when measured in the circumferential direction. In such a construction instead of the webs C being parallel to each other these webs may be inclined and extend between the lateral edges of one slipper member and the corresponding lateral edges of the other slipper member.

What I claim as my invention and desire to secure by Letters Patent is:—

1. In a piston for an internal combustion engine the combination of a piston head adapted to perform solely piston functions and comprising a disk having an integral peripheral flange in which are annular grooves, piston rings in these grooves, two curved members oppositely disposed with relation to the axis of the piston and together adapted to perform solely guiding functions, each curved member being separated from the head flange by a continuous gap extending in the circumferential direction, two webs which are integral with and spring from the head disk and are connected to and integral with the guide members and constitute the only connection between the face of the piston head disk and the guide members, and gudgeon pin bosses formed in these webs in which they are so positioned as to lie between the guide members as set forth.

2. In a piston for an internal combustion engine the combination of a piston head adapted to perform solely piston functions and comprising a disk having a relatively short integral peripheral flange in which are annular grooves, piston rings in these grooves, two curved relatively long members oppositely disposed with relation to the axis of the piston and together adapted to perform solely guiding functions, each curved member being separated from the head flange by a continuous gap of small width extending in the circumferential direction, two webs which are integral with and spring from the head disk and are connected to and integral with the guide members and constitute the only connection between the face of the piston head disk and the guide members, and gudgeon pin bosses formed in these webs in which they are so positioned as to lie between the guide members as set forth.

3. In a piston for an internal combustion engine the combination of a piston head adapted to perform solely piston functions and comprising a disk having an integral peripheral flange in which are annular grooves, piston rings in these grooves, two curved members oppositely disposed with relation to the axis of the piston and together adapted to perform solely guiding functions, each curved member being sepa-

rated from the head flange by a continuous gap extending in the circumferential direction and the diameter of the guide thus formed by these two curved members being slightly greater than the diameter of the piston head, two webs which are integral with and spring from the head disk and are connected to and integral with the guide members and constitute the only connection between the face of the piston head disk and the guide members, and gudgeon pin bosses formed in these webs in which they are so positioned as to lie between the guide members as set forth.

4. In a piston for an internal combustion engine the combination of a piston head adapted to perform solely piston functions and comprising a disk having a relatively short integral peripheral flange in which are annular grooves, piston rings in these grooves, two curved relatively long members oppositely disposed with relation to the axis of the piston and together adapted to perform solely guiding functions, each curved member being separated from the head flange by a continuous gap of small width extending in the circumferential direction and the diameter of the guide thus formed by these two curved members being slightly greater than the diameter of the piston head, two webs which are integral with and spring from the head disk and are connected to and integral with the guide members and constitute the only connection between the face of the piston head disk and the guide members, and gudgeon pin bosses formed in these webs in which they are so positioned as to lie between the guide members as set forth.

5. In a piston for an internal combustion engine the combination of a piston head adapted to perform solely piston functions and comprising a disk having an integral peripheral flange in which are annular grooves, piston rings in these grooves, two curved members oppositely disposed with relation to the axis of the piston and together adapted to perform solely guiding functions, each curved member being separated from the head flange by a continuous gap extending in the circumferential direction, two webs which are integral with and spring from the head disk and are connected to and integral with the lateral portions of the guide members and constitute the only connection between the face of the head disk and the guide members, and gudgeon pin bosses formed in these webs in which they are so positioned as to lie between the guide members as set forth.

6. In a piston for an internal combustion engine the combination of a piston head adapted to perform solely piston functions and comprising a disk having a relatively short integral peripheral flange in which are annular grooves, piston rings in these grooves, two curved relatively long members oppositely disposed with relation to the axis of the piston and together adapted to perform solely guiding functions, each curved member being separated from the head flange by a continuous gap of small width extending in the circumferential direction, two webs which are integral with and spring from the head disk and are connected to and integral with the guide members and constitute the only connection between the face of the piston head and the guide members, gudgeon pin bosses formed in these webs in which they are so positioned as to lie between the guide members, and a web formed integral with the piston head disk and extending transversely across this disk between the two main webs as set forth.

7. In a position for an internal combustion engine the combination of a piston head adapted to perform solely piston functions and comprising a disk having an integral peripheral flange in which are annular grooves, piston rings in these grooves, two curved members oppositely disposed with relation to the axis of the piston and together adapted to perform solely guiding functions, each curved member being separated from the head flange by a continuous gap extending in the circumferential direction, two parallel webs which are integral with and spring from the head disk and are connected to and integral with the guide members and constitute the only connection between the face of the piston head disk and the guide members, and gudgeon pin bosses formed in these webs in which they are so positioned as to lie between the guide members as set forth.

8. In a piston for an internal combustion engine the combination of a piston head adapted to perform solely piston functions and comprising a disk having a relatively short integral peripheral flange in which are annular grooves, piston rings in these grooves, two curved relatively long members oppositely disposed with relation to the axis of the piston and together adapted to perform solely guiding functions, each curved member being separated from the head flange by a continuous gap of small width extending in the circumferential direction and the diameter of the guide thus formed by these two curved members being slightly greater than the diameter of the piston head, two webs which are integral with and spring from the head disk and are connected to and integral with the lateral portions of the guide members and constitute the only connection between the face of the head disk and the guide members, gudgeon pin bosses formed in these webs in which they are so positioned as to lie between the guide members, and a web formed integral with the piston head disk and extending transversely

across this disk between the two main webs as set forth.

9. In a piston for an internal combustion engine the combination of a piston head adapted to perform solely piston functions and comprising a disk having a relatively short integral peripheral flange in which are annular grooves, piston rings in these grooves, two curved and similar relatively long members oppositely disposed with relation to the axis of the piston and together adapted to perform solely guiding functions, each curved member being separated from the head flange by a continuous gap of small width extending in the circumferential direction and the diameter of the guide thus formed by these two curved members being slightly greater than the diameter of the piston head, two parallel webs which are integral with and spring from the head disk and are connected to and integral with the guide members and constitute the only connection between the face of the piston head disk and the guide members, gudgeon pin bosses formed in these webs in which they are so positioned as to lie between the guide members, and a web formed integral with the piston head disk and extending transversely across this disk between the two main webs as set forth.

In testimony whereof I have signed my name to this specification in the presence of two subscribing witnesses.

HARRY RALPH RICARDO.

Witnesses:
A. J. HALL,
R. BAGGOTT.

[fols. 1727-1730] **DEFENDANTS' EXHIBIT 4-H(13).**

Prior Art Patent.

U. S. Patent No. 1,395,441, Nov. 1, 1921,

To E. C. Long.

Piston.

(Filed January 27, 1934.)

709

E. C. LONG.

PISTON.

APPLICATION FILED DEC. 9, 1918.

1,395,441. Patented Nov. 1, 1921.

Fig. 1.

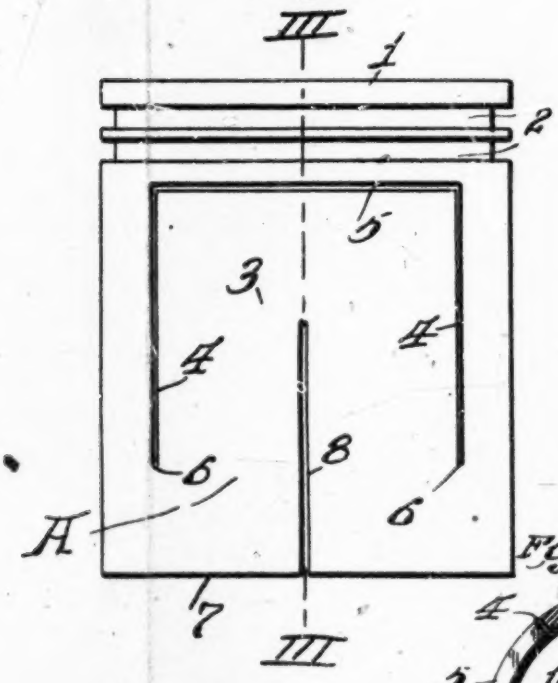

Fig. 2.

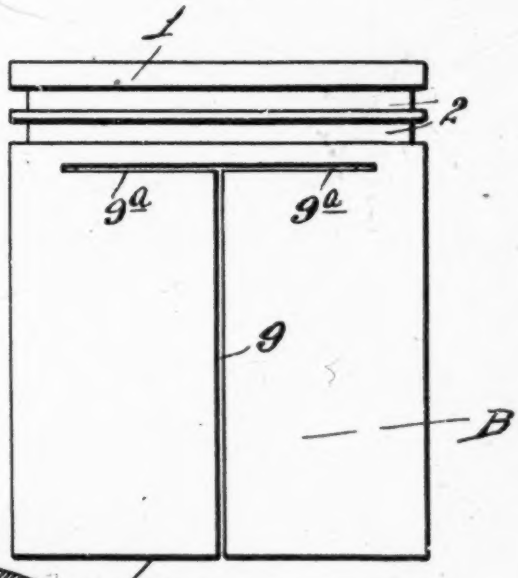

Fig. 5.

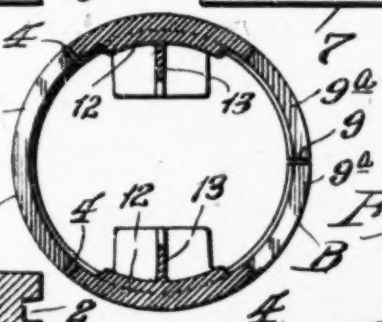

Fig. 3.

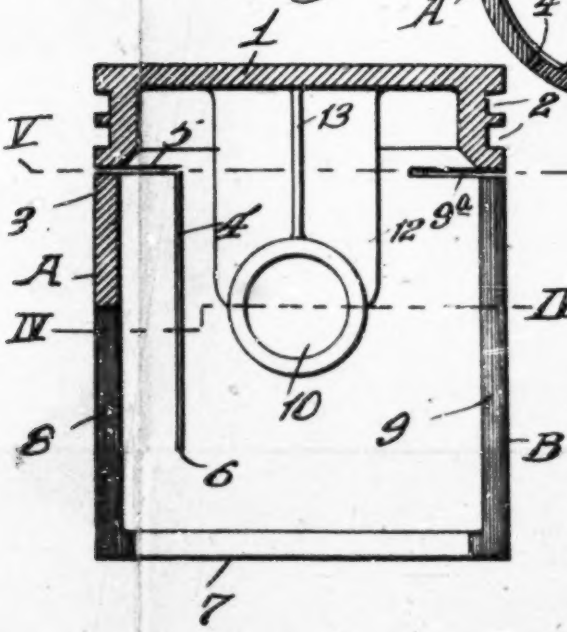

Fig. 4.

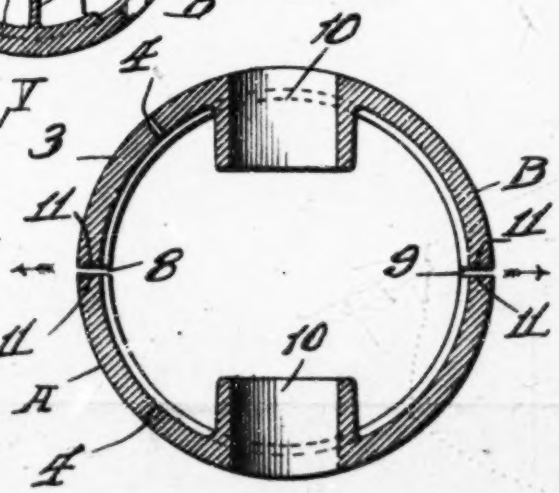

Inventor:
Elmer C. Long.
By L. G. Hatcher
atty.

UNITED STATES PATENT OFFICE.

ELMER C. LONG, OF QUINCY, ILLINOIS.

PISTON.

1,395,441. Specification of Letters Patent. Patented Nov. 1, 1921.

Application filed December 9, 1918. Serial No. 265,947.

To all whom it may concern:

Be it known that I, ELMER C. LONG, a citizen of the United States of America, and a resident of Quincy, in the county of Adams and State of Illinois, have invented certain new and useful Improvements in Pistons, of which the following is a specification.

This invention relates to improvements in pistons.

One of the objects of this invention is to provide an improvement in a piston which is more especially used in internal combustion motors in which means are provided in the piston whereby a better fitting relation is provided thereto relative to the cylinder in which the piston is adapted to reciprocate.

Another object of the invention is to provide an improved piston in which the lower and intermediate portions thereof are capable of expanding and contracting more readily than heretofore relative to the heat contained in the cylinder.

A further object of the invention is to provide an improved piston in which the back-slap or connecting rod thrust will be eliminated.

Other and further objects will appear in the specification and be specifically pointed out in the appended claims, reference being had to the accompanying drawings, in which,

Figure 1 is a side elevation of this improved piston.

Fig. 2 is a side elevation opposite to that shown in Fig. 1.

Fig. 3 is a vertical section taken on the line III—III of Fig. 1.

Fig. 4 is a horizontal section taken on the line IV—IV of Fig. 3.

Fig. 5 is a horizontal section on a reduced scale taken on the line V—V of Fig. 3.

Referring to the drawings the solid end 1 of the piston has the usual piston ring recesses 2 formed therein. In order to more fully describe this improved invention that portion of the piston shown in Fig. 1 will be hereinafter designated the A-side portion, whereas that portion in Fig. 2 will be hereinafter designated as the B-side portion.

Formed in the side portion A is a cut-out tongue shaped portion 3, said tongue portion being formed by a pair of vertically cut slots 4 and a horizontally cut slot 5 adjoining the upper ends of said slots 4, the lower ends of the slots 4 terminating as shown at 6 a distance above the lower end 7 of the piston. Leading from the lower end of the piston in the side portion A is a vertically formed slot 8 which extends upwardly intermediate of the tongue portion 3 and terminates at a point about midway of the length of said tongue portion.

Centrally arranged in the side portion B of the piston is a vertically formed slot 9 which extends from the lower end of the piston 7 and terminates a short distance below the lower piston ring recesses 2, and there being a pair of horizontally formed slots 9^a leading from the vertically formed slot 9, said slots 9 and 9^a forming a T-shape. This slot 9 is diametrically opposite from the slot 8. The slots 8 and 9 are also arranged at right angles to the wrist pin openings 10.

Heretofore in the manufacture and use of pistons for internal combustion motors, due to their having a solid peripheral cylinder bearing surface, the diameters of said pistons have to be turned off to diameters that are much less than the diameters of the cylinders in which they are to reciprocate, on account of the fact that extreme expansion of the piston has to be taken care of in order to prevent too much friction which is caused by too tight a fit of the piston in the cylinder. With this improved piston in which the tongue portion 3 is formed and in which the vertically formed slots 8 and 9 are contained, a closer fit may be established between the piston and its cylinder during the assembly. Then when a motor equipped with these improved pistons is in operation upon the greatest expansion of the piston, the expanding forces against the peripheral surfaces of the piston will engage the cylinder wall with a pressure only great enough to automatically accommodate a proper sliding relation of the piston relative to the cylinder; whereas the excess crowding or expansion will be carried out in the slots 4, 8 and 9 of the piston, thereby preventing undue frictional wearing of the piston against the cylinder.

The construction of the tongue shaped portion 3 is formed in the intermediate portion of the piston for the purpose of taking care of the expansion and contraction of said intermediate portion, said tongue shaped portion, however, also being assisted by the slot 9, whereas the slot 8 and lower

end of the slot 9 will provide for the expansion and contraction of the lower end of the piston.

In a piston of this improved character it is preferable to have the solid end 1 of the piston of a lesser diameter across the peripheral surface adjacent the piston ring recesses 2 than the remaining lower portion of the piston, said lesser diameter adjacent the solid end of the piston not being considered relative to this improved invention, as the usual type of piston rings mounted in the recesses will automatically take care of the proper expanding, contracting and packing relation relative to said solid piston end.

The slots 9ª which adjoin the vertical slot 9 adjacent the piston ring recesses 2 prevent the expansion and contraction strains of the solid piston end 1 from traveling directly onto the side B of the piston, in which instance said strains will be dispersed along the wrist pin sides of the piston.

In order to take care of the aforementioned backslap of the piston which is generally given to the lower end of pistons from the throwing-thrust of the connecting rod, attention is called to the disposition of the vertically formed slots 8 and 9 which are diametrically opposite from one another and arranged at right angles to the wrist pin openings 10. These slots 8 and 9, however, weaken the lower portion of the piston relative to the expansion and contraction thereof, but in the disposition of said slots as mentioned the bending moment of the edges 11 thereof is transferred circularly therefrom, the side portions A and B in which the slots 8 and 9 are respectively located will provide a reinforcement to the piston against the connecting rod swinging-thrust.

As shown more clearly in Figs. 3 and 5, enlarged portions 12, each of which is reinforced by the rib 13, are provided for reinforcing the bearings formed by the wrist pin openings 10.

What I claim is:

1. A piston having a tongue-shaped portion formed on its peripheral face, and a longitudinally formed slot extending into said tongue portion.

2. A one piece piston closed at one end and having a pair of longitudinally arranged diametrically opposed slots formed in its peripheral face, thereby providing disconnected peripheral portions capable of moving outwardly or inwardly without restraint, and there being a transverse slot located adjacent the closed end of the piston adjoined intermediate of its ends by one of said other slots.

3. A piston having a pair of longitudinally arranged diametrically opposed slots formed in its peripheral face, one of said slots being shorter than the other slot.

4. A piston having a tongue-shaped portion formed on its peripheral face, a longitudinally formed slot extending into said tongue portion, and a second longitudinally formed slot diametrically opposed to said first-mentioned slot.

5. A piston having a solid end portion and a T-shaped slot formed in the peripheral face of the piston in which the transverse portion of said T-shaped slot is disposed adjacent the solid end of the piston, said slot forming adjacent disconnected peripheral portions which are capable of unrestrained outward and inward movement.

6. A piston having a solid end portion, a tongue-shaped portion formed on the peripheral face of the piston, having its face end located adjacent the solid end portion, and a longitudinally formed slot extending from the lower end of the piston into said tongue portion.

7. A piston having a tongue-shaped portion formed on its peripheral face, a T-shaped slot oppositely disposed from said tongue-shaped slot, and a longitudinally formed slot extending into said tongue portion.

8. A piston having a tongue-shaped portion formed on its peripheral face, a longitudinally formed slot extending into said tongue portion, and a second longitudinally formed slot diametrically opposed to said first-mentioned slot adjoining a transversely formed slot.

9. A piston having a solid end portion, a tongue-shaped portion formed on the peripheral face of the piston, having its free end located adjacent the solid end portion, a longitudinally formed slot extending from the lower end of the piston into said tongue portion, and a T-shaped slot disposed opposite from said tongue portion.

10. A one piece piston provided with a solid end portion and a skirt portion, said skirt portion having a longitudinally extending slot formed through the thickness of its wall, said slot extending from the rear edge of the skirt portion and forming adjacent disconnected portions in said skirt portion which are capable of being moved inwardly or outwardly without restraint.

ELMER C. LONG.

[fols. 1731-1734] **DEFENDANTS' EXHIBIT 4-H(14).**

Prior Art Patent.

U. S. Patent No. 1,489,499, April 8, 1924,

To E. C. Long.

Piston for Internal Combustion Motors.

(Filed January 27, 1934.)

713

April 8, 1924. 1,489,499

E. C. LONG

PISTON FOR INTERNAL COMBUSTION MOTORS

Filed Dec. 9, 1918

Fig. 1

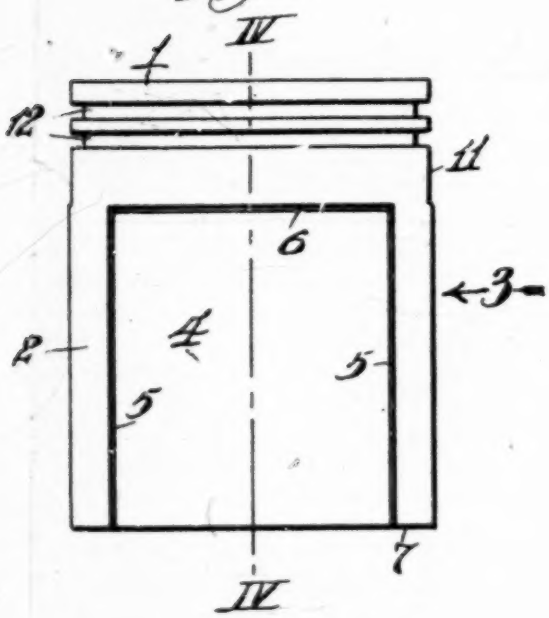

Fig. 2.

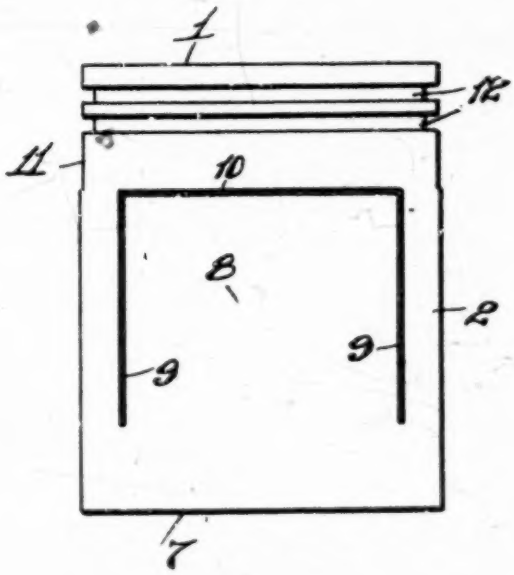

Fig. 3.

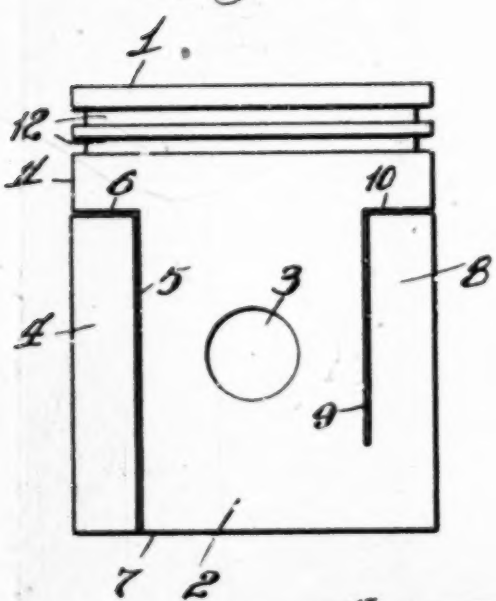

Fig. 4.

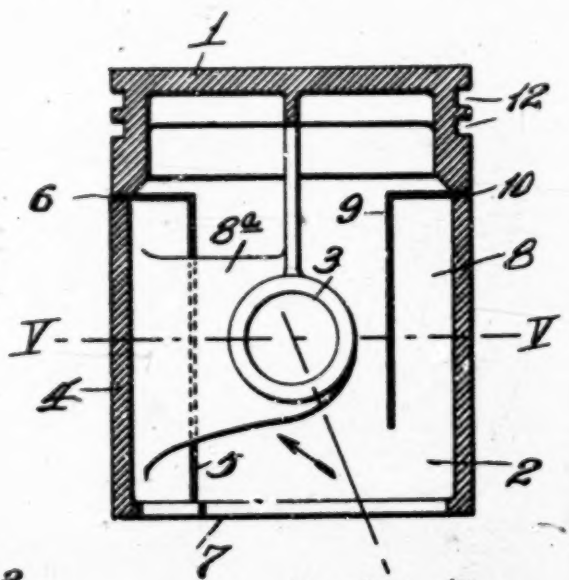

Fig. 5.

Inventor:
Elmer C. Long.
By D. G. Fletcher
Atty.

Patented Apr. 8, 1924. 1,489,499

UNITED STATES PATENT OFFICE.

ELMER C. LONG, OF QUINCY, ILLINOIS.

PISTON FOR INTERNAL-COMBUSTION MOTORS.

Application filed December 9, 1918. Serial No. 265,946.

To all whom it may concern:

Be it known that I, ELMER C. LONG, a citizen of the United States of America, and a resident of the city of Quincy, in the county of Adams and State of Illinois, have invented certain new and useful Improvements in Pistons for Internal-Combustion Motors, of which the following is a specification.

The primary object of this invention is to provide an improved piston for internal combustion motors, whereby a better working relation is established between the piston and its cylinder during the operation of the motor under highly heated conditions.

Another object is to provide an improvement in a piston, whereby the working thrust due to the piston forcing the connecting rod is received by only one part of the piston surface, and not on the whole piston as heretofore.

Other and further objects will appear in the specification and be specifically pointed out in the appended claims, reference being had to the accompanying drawings exemplifying the invention, and in which,

Figure 1 is a side elevation of this improved piston.

Figure 2 is a side elevation opposite to that shown in Fig. 1.

Figure 3 is a side elevation taken in the direction of the arrow 3 in Fig. 1.

Figure 4 is a vertical section taken on the line IV—IV of Fig. 1.

Figure 5 is a transverse section taken on the line V—V of Fig. 4.

Referring to the drawings 1 designates a solid head of the piston, 2 the main body portion, and 3 the wrist pin bearings. Formed on one side of the main body portion 2, as shown more clearly in Fig. 1, is a cut out portion 4 which is formed in the periphery of the piston by the pair of longitudinal slots 5 and transverse slot 6, which adjoins the slots 5 adjacent the solid end 1 of the piston, said slots at their opposite ends continuing to the lower end 7 of the piston. The cut out portion 4 is held in its peripheral position by a pair of integrally formed connecting portions 8^a, each of said portions extending from each of the wrist pin bearings 3.

Formed in the piston periphery opposite to the cut out portion 4 is a tongue shaped portion 8, having its free end extend adjacent the solid end 1 of the piston, said tongue portion being separated from the body portion 2 of the piston by a pair of longitudinal slots 9 and a transverse slot 10, said slots 9 at their lower ends terminating at a distance from the end 7 of the piston.

From the aforesaid detailed construction of this improved piston, the body portion 2 thereof having the cut away portion 4 and tongue shaped portion 8 formed therein, will be resilient, as against the ordinary type of piston, and inasmuch as the exploding impulses of internal combustion motors are effective on the solid heads of the pistons, a higher temperature will be given to the solid piston end or head, as against the body portion of the piston on which is contained the cylinder engaging portion.

In this connection, with applicant's improved construction, since the body portion 2 or cylinder engaging portion has separated portions, independent contracting and expanding extents can be carried out in the piston between the body portion 2 and the solid head 1 of the piston.

Inasmuch as the cut out portions provide resiliency to the body portion 2 of the piston, in order to take care of the greatest amount of expansion of the solid head of the piston, the periphery of the piston adjacent the solid head is made smaller in diameter than the remaining portion of the piston, as designated at 11, as the piston rings when mounted in the recesses 12 will provide the cylinder fit for the solid head 1, whereas the cut out portion 4 and tongue shaped portion 8 of the body portion 2 of the piston will yieldingly bear against the cylinder wall.

In addition to the aforesaid, in the operation of this improved piston, when the piston is driving the connecting rod downwardly on the line 13, and in the direction of the arrow 14 in Fig. 4, the forcing thrust of the piston on the connecting rod is received by the connecting portions 8^a and borne by the cut away portion 4 against the cylinder wall, thereby relieving the remaining portions of the piston from the thrust, and hence forth preventing bending strains being carried to the tongue shaped portion 8, and consequently preventing back slap of the piston.

What I claim is:

1. A one piece piston having a portion entirely separated and unsupported from its peripheral face, between the wrist pin bearings thereof, the peripheral wall of said

piston which is oppositely disposed from said separated portion being slotted.

2. A piston having a portion separated and unsupported from its peripheral face, and a cut out tongue shaped portion formed in the periphery of said piston oppositely disposed from said separated portion.

3. A piston having a portion separated and unsupported from its peripheral face, means for supporting said separated portion from the interior of the piston, and a cut out tongue shaped portion formed in the periphery of said piston oppositely disposed from said separated portion.

4. A one piece full skirted hollow piston having a portion of its peripheral face entirely cut away, between the wrist pin bearings thereof thereby forming a separated peripheral portion, and supporting means secured to said separated portion and the wrist-pin bearings of the piston, for holding said separated portion in peripheral alinement with the peripheral face of the piston.

5. A piston having a solid end portion and a full skirt portion formed integral therewith, and there being a part of said skirt portion entirely cut away and wholly unsupported from the main body portion thereof.

6. A piston having a solid end portion and a skirt portion formed integral therewith, there being a part of said skirt portion entirely cut away and wholly unsupported from the main body portion thereof, and there being a tongue shaped portion formed in said skirt portion.

7. A hollow piston having a portion of its peripheral wall entirely cut away between the wrist pin bearings thereof, thereby forming a separated section, said peripheral wall bearing a slot in opposite disposition to said section and supporting means secured to said section and the wrist pin bearings of the piston for holding said section in alinement with the peripheral wall.

8. A full skirted one piece piston having a portion of its peripheral wall entirely cut away and wholly separated from the remaining portion of the peripheral wall, said cut away portion being integrally supported from the interior of the piston.

9. A one piece piston having a pair of slots cut entirely through the thickness of its peripheral wall, said slots leading from the open end of the piston to a point adjacent the lowermost packing ring recess thereof and being joined by a transversely extending slot thereby forming a disconnected portion, and integral means provided for supporting said disconnected portion between said slots.

ELMER C. LONG.

[fols. 1735-1788] **DEFENDANTS' EXHIBIT 4-H(15).**

Prior Art Patent.

U. S. Patent No. 1,872,772, Aug. 23, 1932,

To E. C. Long.

Piston for Internal Combustion Motors.

(Filed January 27, 1934.)

717

Aug. 23, 1932. E. C. LONG 1,872,772

PISTON FOR INTERNAL COMBUSTION MOTORS

Filed March 7, 1919

Fig. 1.

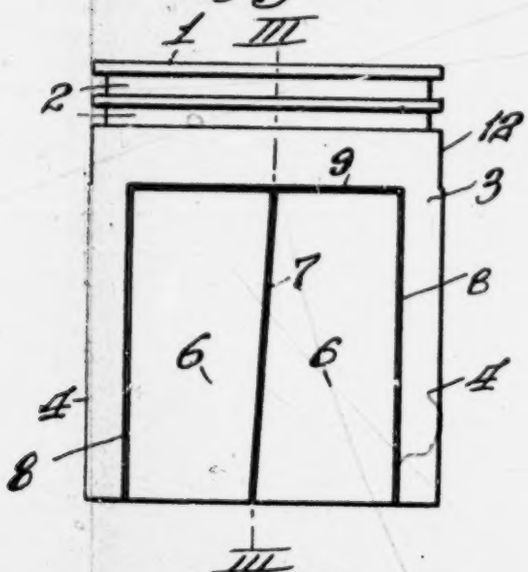

Fig. 2

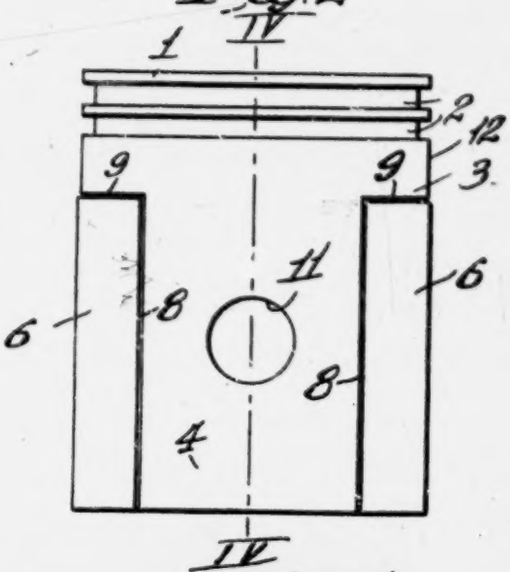

Fig. 3.

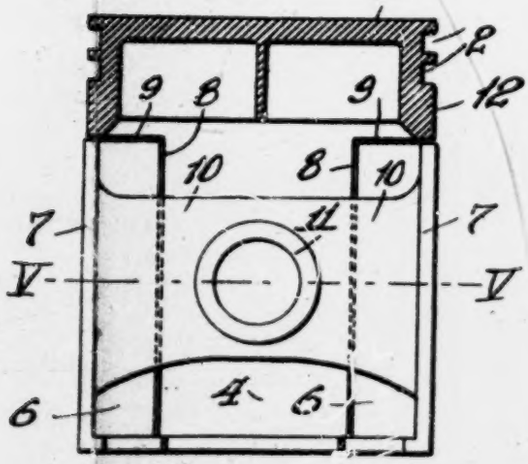

Fig. 4.

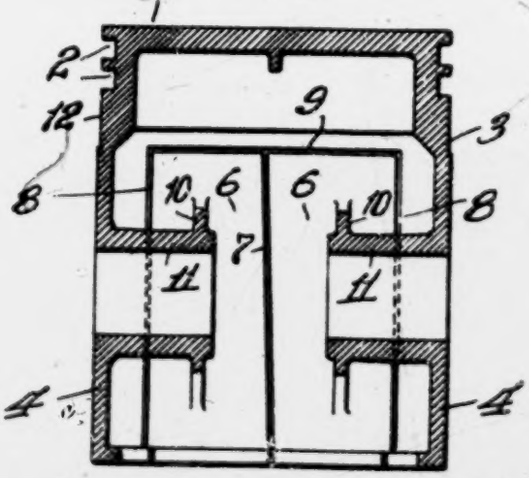

Fig. 5.

Fig. 6.

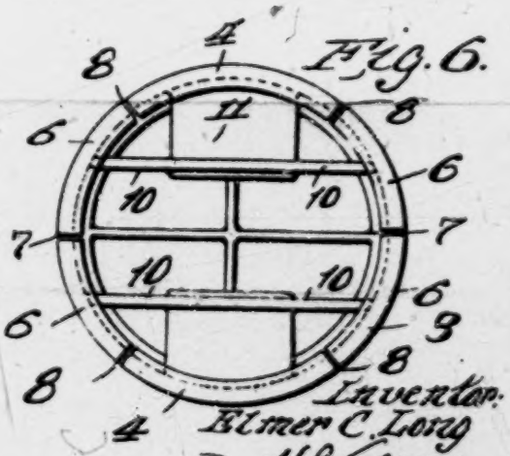

Inventor.
Elmer C. Long
By H. B. Hatcher
atty.

718

Patented Aug. 23, 1932 1,872,772

UNITED STATES PATENT OFFICE

ELMER C. LONG, OF QUINCY, ILLINOIS, ASSIGNOR, BY MESNE ASSIGNMENTS, TO SECURITY TRUST COMPANY, OF DETROIT, MICHIGAN A CORPORATION OF MICHIGAN

PISTON FOR INTERNAL COMBUSTION MOTORS

Application filed March 7, 1919. Serial No. 281,175.

The primary object of this invention is to provide an improved piston for internal combustion motors, whereby a better working relation is established between the piston and its cylinder during the operation of the motor under highly heated conditions.

Another object is to provide an improvement in a piston whereby the working thrust due to the piston forcing the connecting rod is received by certain parts of the piston only.

A further object is in providing an improved piston with means formed on that portion thereof which will engage the cylinder wall, whereby a better fitting relation can be given to the piston relative to the cylinder during the machining of the piston so that the fitting relation will be approximately the same during the operation of the motor in which this improved piston or pistons is contained.

Other and further objects will appear in the specification and be specifically pointed out in the appended claims, reference being had to the accompanying drawing exemplifying the invention, and in which,

Figure 1 is a side elevation of this improved piston.

Figure 2 is an elevation of the wrist pin side of the piston.

Figure 3 is a vertical section taken on the line III—III of Fig. 1.

Figure 4 is a vertical section taken on the line IV—IV of Fig. 2.

Figure 5 is a horizontal section taken on the line V—V of Fig. 3.

Figure 6 is an elevation of the lower end of the piston.

Referring to the drawing, 1 designates the solid end portion of the piston, having the usual piston ring recesses 2 and the main body portion 3, said main body portion having opposing wrist pin bearing sides of faces 4.

Formed in the periphery of the piston and in the body portion 3 thereof between the wrist pin side portions 4 and on each side of the piston is a pair of separated portions 6, said pairs of portions 6 being divided by a slanting or inclining slot 7, and are further divided from the body portion of a piston by the vertical slots 8 and the transverse slot 9.

Each cut out portion 6 is held in its peripheral position by an integrally formed connecting portion 10, there being a pair of said connecting portions extending in opposite directions from each of the wrist pin bearings 11.

In the construction of this improved piston, the slots 7, 8 and 9 which form the separated portions 6 are preferably cut in the body portion 3 of the piston, and in the machining of the piston the upper portion thereof adjacent the solid end 1 is turned to a lesser diameter than the body portion 3, as indicated by the numeral 12.

In setting forth the advantages gained by a piston of this improved construction, it will be necessary to call attention to the solid piston construction, in which the piston was turned down to a size considerably smaller than the diameter of the cylinder to allow for the expanding of the piston, the fit of the cylinder being provided by the piston or packing rings, but from experience, it has been found that the pistons of internal combustion engines would at the time have too great an expansion, whereby considerable friction was created on account of the piston fitting too tightly in the cylinder when the same became highly heated, and if the piston were turned down to a smaller diameter to avoid the extreme expanding fit of the piston during the highly heated condition, the piston would be too loose in the cylinder under normal conditions, thereby providing the piston with considerable back slap against the cylinder wall. With this improved construction, on account of the separated portions 6 provided in opposite disposed relation in the peripheral face of the piston, the body portion 3 thereof can be turned to a size slightly less in diameter than the cylinder wall so that when a motor equipped with this improved piston is put in operation, the proper fit is provided between the body portion of the piston and its cylinder under a small degree of heat, whereas when highly heated conditions exist the body portion of

the piston comprised of the wrist pin sides 4 and separated portions 6 can expand without fitting too tightly against the cylinder wall, as the expansion thereof will be taken up by the slots 7 and 8, as expanding and contracting resiliency is given to the body portion 3 of the piston by the separated portions thereof.

The expanding fit given to the body portion 3 of the piston as just related will allow the upper portion of the piston adjacent the solid end 1 to be turned to a lesser diameter as indicated at 12 on account of the fact that a proper packing and fitting relation is provided when the piston rings are mounted in their respective recesses 2, as said upper portion of the piston will be turned down to such a degree whereby the extreme expansion of the piston will not cause the peripheral face of the upper portion of the piston to engage the cylinder wall at any time.

In addition to the connecting portions 10, supporting their respective separated portions 6 of the piston, said connecting portions 10 serve to reinforce said separated portions 6 and hold them outwardly against the forcing thrust of the connecting rod so that back slap of the piston is prevented as it is to be noted that said separated portions 6 are angularly arranged relative to the wrist pin bearings 11 of the piston.

Inasmuch as the separated portions 6 will be rigidly held against bending against the forcing thrust of the piston from the connecting rod of the piston, the dividing slanting slots 7 of the pairs of separated portions 6 will prevent the wearing of a raised portion in the cylinder wall.

What I claim is:

1. A one piece piston having a solid walled skirt portion, said skirt portion having a pair of sections of its peripheral wall entirely cut away thereby forming separated peripheral parts, and integral means for supporting said sections in peripheral alinement with the peripheral face of said skirt portion.

2. A piston having a solid walled skirt, said skirt having a pair of opposing portions of its peripheral wall entirely cut away, thereby forming separated peripheral porportions, and integral supporting means secured to said separated portions and the wrist pin bearings of the piston for holding said separated portions in peripheral alinement with the peripheral face of the skirt.

3. A one piece piston having a full skirt portion, said skirt portion having opposing pairs of sections entirely cut away and wholly separated from its peripheral face, said sections being extended to one end of the piston.

4. A piston having a solid end portion and a skirt portion which is adapted to engage the entire circumferential wall of the cylinder in which it reciprocates, said skirt portion having a series of sections which are wholly separated from one another, said skirt portion having a pair of wrist pin bearings formed integral therewith, and a rib extending from each of said bearings to a respective section.

5. A piston having a head and a cross-head structure connected thereto and comprising diametrically opposite slippers, wrist pin bosses between the slippers and means joining said bosses and slippers together, the said joining means being resiliently yieldable.

6. In a piston for an internal combustion engine, the combination of a piston head having a depending ring flange, two pairs of curved guide members oppositely disposed with relation to the axis of the piston, the curved members of each pair thereof being separated from the ring flange and from each other by continuous air gaps, and webs carrying wrist pin bosses, the said curved members, piston head and webs being united in an integral unitary structure.

7. In a piston for an internal combustion engine, the combination of a piston head having a depending ring flange, two pairs of curved guide members oppositely disposed with relation to the axis of the piston, the curved members of each pair thereof being separated from the ring flange and from each other by continuous air gaps, wrist pin bosses and webs connecting the wrist pin bosses with certain of said guide members, said guide members, piston head and webs being united in an integral unitary structure.

ELMER C. LONG.

[fols. 1789-1796] **DEFENDANTS' EXHIBIT 4-H(25).**

Prior Art Patent.

U. S. Patent No. 1,557,625, Oct. 20, 1925,

To L. M. Stellman.

Piston Construction.

(Filed January 27, 1934.)

721

Oct. 20, 1925. 1,557,625

L. M. STELLMANN

PISTON CONSTRUCTION

Filed April 18, 1922 2 Sheets-Sheet 1

Fig. 2.

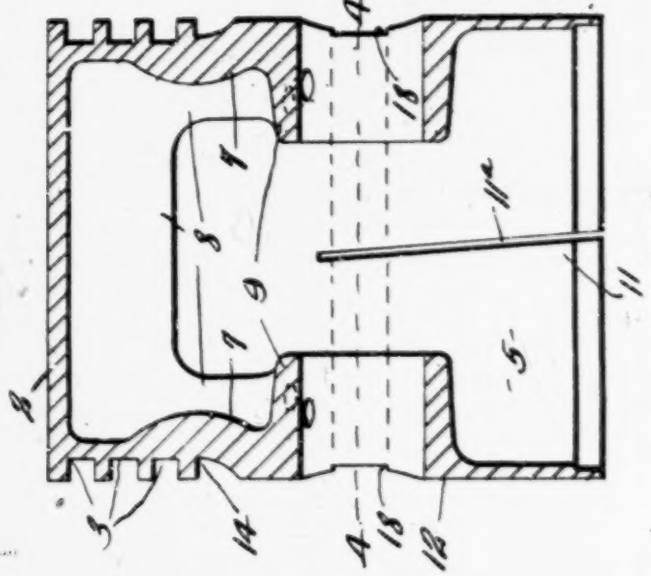

Fig. 1.

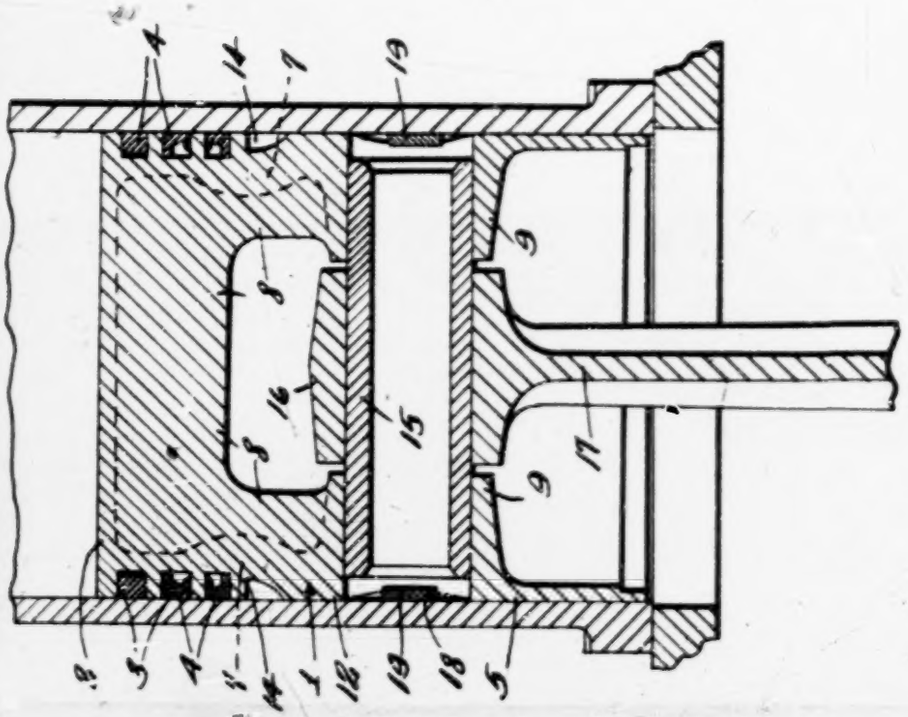

Louis M. Stellmann INVENTOR.

BY

Parsons & Bordell. ATTORNEYS.

BLANK PAGE

722

Oct. 20, 1925.

1,557,625

L. M. STELLMANN

PISTON CONSTRUCTION

Filed April 18, 1922

2 Sheets-Sheet 2

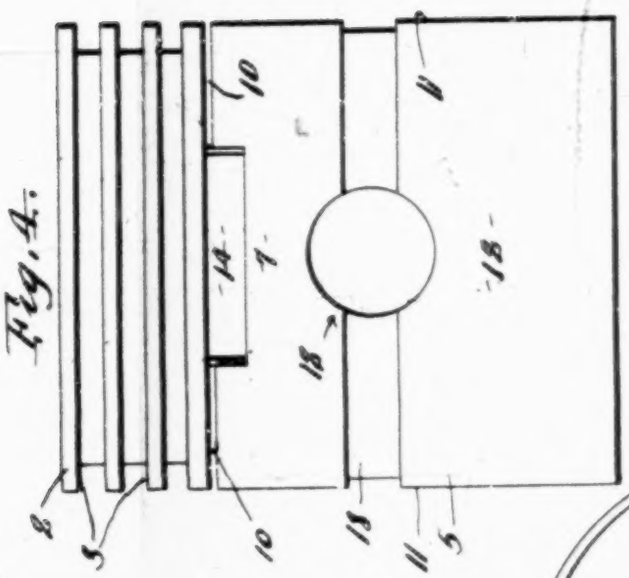

Fig. 4.

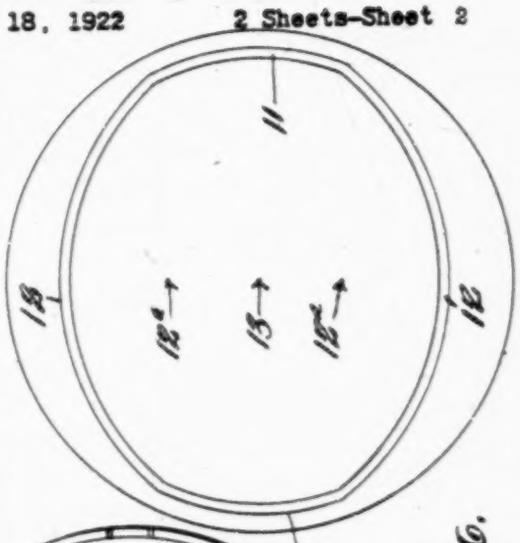

Fig. 6.

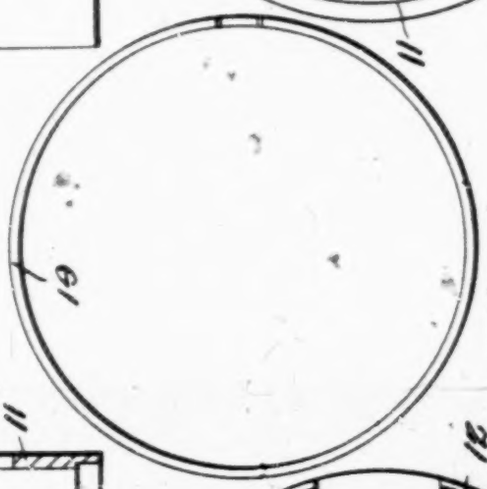

Fig. 7.

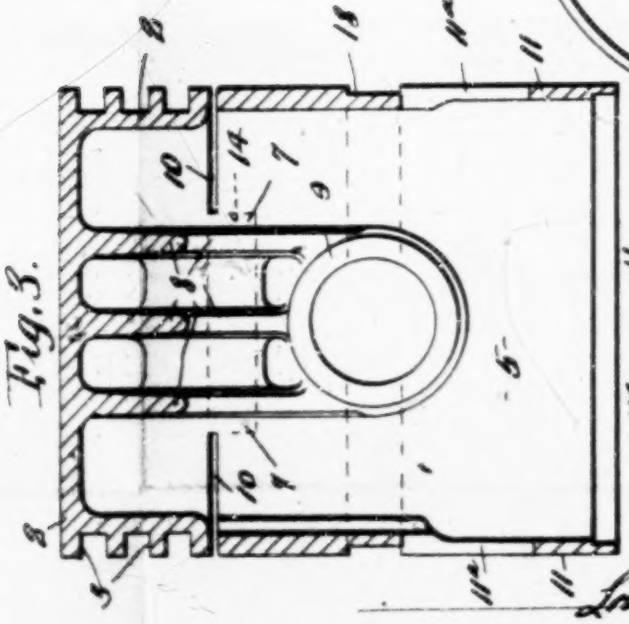

Fig. 3.

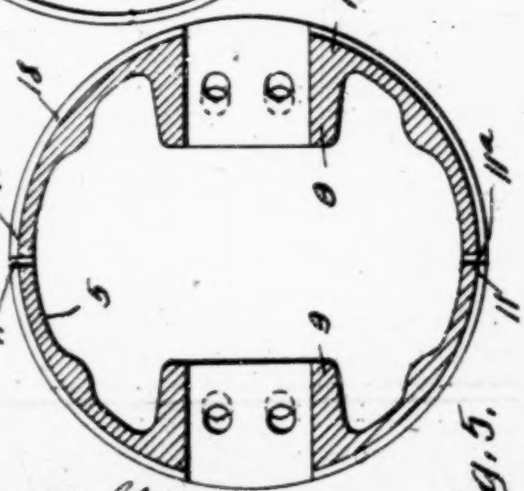

Fig. 5.

Louis M. Stellmann INVENTOR.

BY

Parmelee & Bissell ATTORNEYS.

Patented Oct. 20, 1925. 1,557,625

UNITED STATES PATENT OFFICE.

LOUIS M. STELLMANN, OF SYRACUSE, NEW YORK, ASSIGNOR TO H. H. FRANKLIN MANUFACTURING COMPANY, OF SYRACUSE, NEW YORK, A CORPORATION OF NEW YORK.

PISTON CONSTRUCTION.

Application filed April 18, 1922. Serial No. 554,748.

To all whom it may concern:

Be it known that I, LOUIS M. STELLMANN, a citizen of the United States, and a resident of Syracuse, in the county of Onondaga and State of New York, have invented a certain new and useful Piston Construction, of which the following is a specification.

This invention relates to pistons more particularly for internal combustion engines, which pistons are formed of a metal as aluminum alloy, having a greater coefficient of expansion than the cylinder walls which are usually of cast iron; and has for its object an expansible piston having a portion of its skirt or sleeve filling and conforming to the cylinder at all temperatures of the engines and other portions of its sleeve or skirt normally spaced apart from the cylinder walls and movable or expansible outwardly toward the cylinder walls to conform to the curve thereof, as the piston expands under the influence of the heat generated in the operation of the engine, the expansible portions carrying the wrist pin bosses and constituting approximately two-thirds of the cylinder.

The invention consists in the novel features, and in the combinations and constructions hereinafter set forth and claimed.

In describing this invention, reference is had to the accompanying drawings in which like characters designate corresponding parts in all the views.

Figure 1 is a fragmentary vertical sectional view of this piston, the contiguous portion of the cylinder and also the wrist pin and connecting rod and other parts of the engine being also shown, the connecting rod being broken away at one end.

Figure 2 is a sectional view of the piston similar to that shown in Fig. 1, the cylinder and other parts of the engine being omitted.

Figure 3 is a sectional view of the piston taken at a right angle to Fig. 2.

Figure 4 is an elevation of the piston.

Figure 5 is a transverse sectional view through the piston on line 4—4, Fig. 2.

Figure 6 is a diagrammatic view illustrating the position of the piston in the cylinder, the eccentric or expansible portions or walls of the piston being exaggerated to clearly illustrate the operation or expansion of the piston relatively to the cylinder.

Figure 7 is a detail view of the ring for holding the wrist pins from displacement.

This piston comprises a head portion provided with the usual grooves for the piston rings, and a sleeve, the sleeve having diametrically opposite eccentric expansible portions extending in arcs of greater radius than the normal radius or the radius of diametrically opposite concentric portions of the piston arranged between the expansible portions.

The concentric portions are arranged on the bearing or thrust sides of the piston and are of considerably less width than the eccentric portions, and the pin bosses are carried by the eccentric expansible portions.

1 designates the piston having a head 2 provided with the usual grooves 3 for the piston rings 4.

5 is the sleeve of the piston which is connected to the head by diametrically opposite integral portions at 7 and also by internal brackets or webs 8, the connecting portions 7 and webs 8 being located above the pin bosses 9.

The sleeve is also separated from the head by slots 10 located on diametrically opposite sides thereof on opposite sides of the connecting portions 7 and webs 8.

The sleeve 5 is automatically expansible to fit the cylinder and has concentric portions 11 on diametrically opposite sides thereof which slidably fit the bore of the cylinder and other diametrically opposite eccentric portions 12 between arcs of greater radius than the radius of the concentric portions and the center of the arc of each eccentric portion being located at 12^a on the opposite side of the longitudinal axis 13 of the piston from that on which the eccentric portion 12 is located.

In the interest of brevity, the piston thus may be considered to be slightly elleptical in general form in cross section although it is not a true ellipse as its ends are concentric with the axis of the piston and the outline of the piston is not a true ellipse.

The concentric portions 11 are arranged on the bearing or thrust sides of the piston

and each constitutes approximately one-sixth of the sleeve, and the wrist pin bosses 9 project inwardly from the intermediate portions of the eccentric sides of the piston, each of which constitute approximately one-third of the sleeve.

The outer faces of the sleeve are slightly tapered toward the lower end of the piston as indicated in Fig. 5.

Preferably, the concentric portions 11 of the piston are formed with lengthwise slots 11ª opening through the lower end of the piston and extending to a point above the axis of the pin bosses.

The piston is shown as provided with peripheral recesses 14 on diametrically opposite sides thereof in the connecting portion 7 in line with the slots 10. These recesses perform no function in the use of the piston but are present for manufacturing purposes for the purpose of facilitating the cutting of the slots 10 by turning operation.

The slots 10 entirely separate the concentric end portions or walls of the sleeve from the head and partly separate portions of the eccentric walls on opposite sides of the connecting neck 7 from the head.

The wrist pin bosses 9 as before stated, are carried by the eccentric or expansible portions on walls 12 of the sleeve and hence move radially during the expansion of such walls, and the wrist pin 15 is slidably or floatingly mounted in the wrist pin bosses and it is also preferably slidingly or floatingly mounted in the bearing 16 of the connecting rod 17.

In order to prevent the wrist pin from sliding into engagement with the cylinder walls and scoring the cylinder, the piston is provided with means for holding the pin from axial displacement beyond the periphery of the piston.

In the illustrated embodiment of my invention, the sleeve is formed with a circumferential groove 18 which extends across the outer ends of the wrist pin bosses, and a retaining ring 19 is seated in the groove and thus prevents outward movement of the wrist pin.

In case the piston pin becomes broken in use the ring 19 holds the fragment thereof from dropping down into the engine base and damaging other parts of the engine.

In operation, the piston is placed in the cylinder with the concentric portions 11 fitting the bore of the cylinder and holding the piston from slapping. As the piston becomes heated, the eccentric portions 12 thereof expand or bow outwardly toward or into continuations of the arcs of the concentric portions 11 and relieve undue tightness between the concentric portions 11 and the cylinder walls.

This piston construction is particularly advantageous in pistons made of aluminum or aluminum alloy or some metal having a greater coefficient of expansion than the cylinder, in that the piston is made to fit the cylinder at all temperatures of the engine, without relying upon resiliency of the metal. Hence, the liability of a resilient metal taking a permanent set is eliminated as in compressible pistons which sooner or later take a permanent set, and become sloppy.

What I claim is.

1. A piston for internal combustion engines comprising a head and a sleeve, the sleeve being slightly elliptical in general form in cross section, and the sleeve being formed with longitudinal slots arranged in the end walls of the elliptical form, the sleeve having pin bosses extending inwardly from the long walls of the elliptical form along a short diameter of the elliptical form and each of the long walls of the ellipse being approximately one third of the sleeve, substantially as and for the purpose specified.

2. A piston for internal combustion engines comprising a head, and a sleeve, the sleeve having diametrically opposite portions of its wall of equal width concentric with the axis of the piston and other diametrically opposite eccentric expansible portions between the concentric portions having their outer faces of greater radius than the concentric portions and located within continuations of the arcs of the outer faces of the concentric portions, each eccentric portion constituting approximately one-third of the sleeve, the concentric portions being formed with lengthwise slots opening through the lower end of the sleeve, and pin bosses projecting inwardly from the eccentric portions substantially midway between the concentric portions, substantially as and for the purpose specified.

3. A piston for internal combustion engines, comprising a head, and a sleeve, the sleeve having diametrically opposite portions of its wall of equal width concentric with the axis of the piston and other diametrically opposite eccentric expansible portions between the concentric portions, the eccentric portions having their outer faces of greater radius than the concentric portions and located within continuations of the arcs of the outer faces of the concentric portions, each eccentric portion constituting approximately one-third of the sleeve, the concentric portions being formed with lengthwise slots opening through the lower end of the sleeve, and pin bosses projecting inwardly from the eccentric portions substantially midway between the concentric portions, the slots being located in the portion of the sleeve at the end of the ellipse approximately midway between the pin bosses.

4. A piston for internal combustion en-

gines having a head and a sleeve, transverse slots in diametrically opposite sides of the piston separating the opposite side portions of the head from the sleeve, whereby the head is connected to the sleeve between the ends of the slots, the sleeve being slightly elliptical in general form in cross section, the ends of the elliptical form being concentric with the axis of the piston, and wrist pin bosses projecting from the portions of the sleeve joined to the head between the ends of the slots, the axis of said pin bosses extending along the short diameter of the elliptical form, substantially as and for the purpose specified.

5. A piston for internal combustion engines having a head and a sleeve, transverse slots in diametrically opposite sides of the piston separating the opposite side portions of the head from the sleeve, whereby the head is connected to the sleeve between the ends of the slots, the sleeve being slightly elliptical in general form in cross section, the ends of the elliptical form being concentric with the axis of the piston, and wrist pin bosses projecting from the portions of the sleeve joined to the head between the ends of the slots, the axis of said pin bosses extending along the short diameter of the elliptical form, the sleeves being also formed with lengthwise slots midway between the ends of the transverse slots, substantially as and for the purpose set forth.

In testimony whereof, I have hereunto signed my name, at Syracuse, in the county of Onondaga, and State of New York, this ----day of February, 1922.

LOUIS M. STELLMANN.

BLANK PAGE

[fols. 1797-1802] **DEFENDANTS' EXHIBIT 4-H(26).**

Prior Art Patent.

U. S. Patent No. 1,842,022, Jan. 19, 1932,

To S. D. Hartog.

Piston.

(Filed January 27, 1934.)

727

Jan. 19, 1932. S. D. HARTOG 1,842,022

PISTON

Filed Feb. 16, 1920

Fig. 1

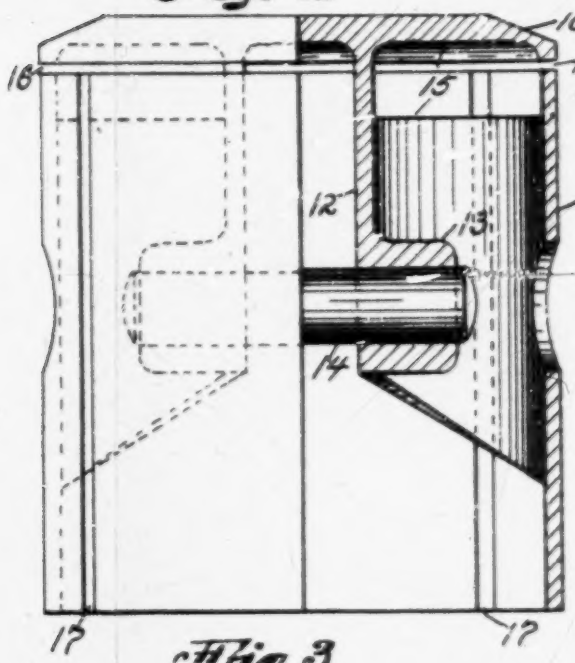

Fig. 2

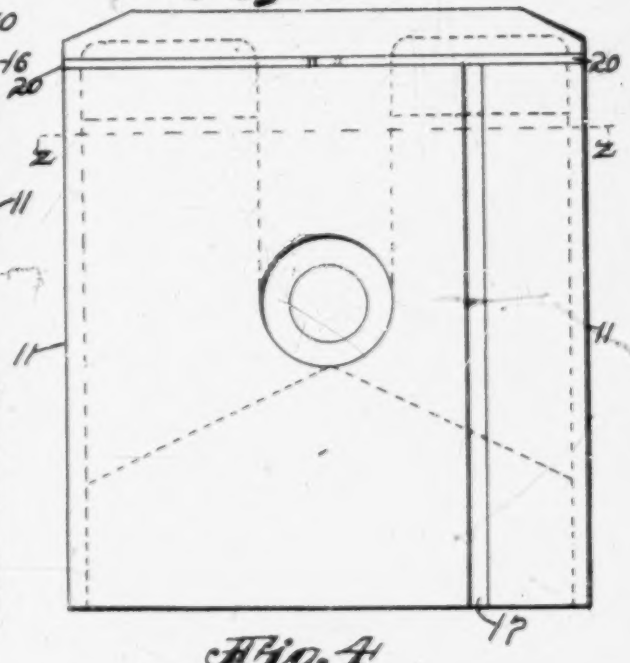

Fig. 3

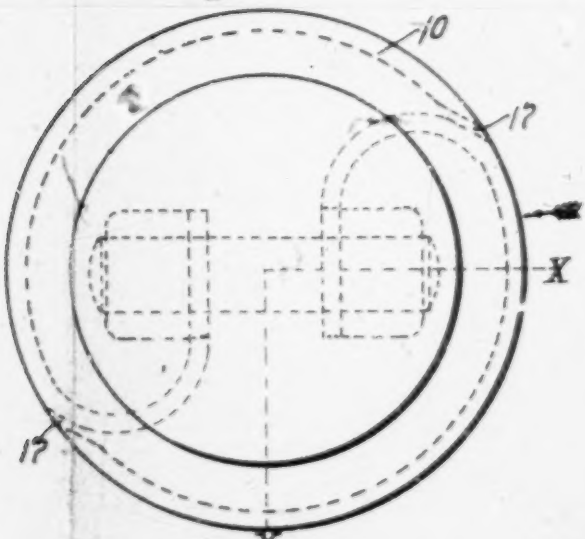

Fig. 4

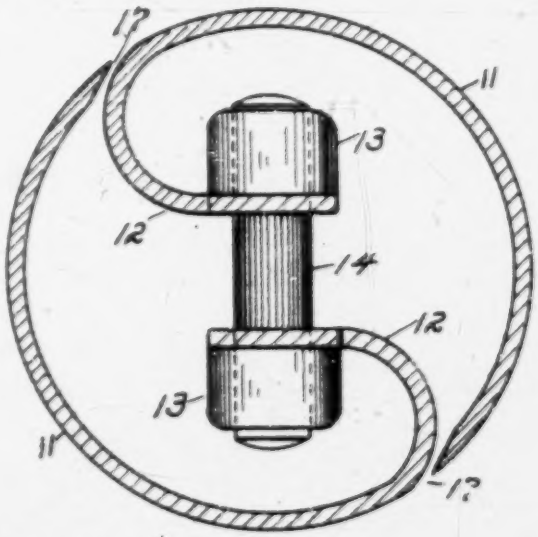

Fig. 5

Fig. 6

Inventor
Stephen D. Hartog

Patented Jan. 19, 1932 1,842,022

UNITED STATES PATENT OFFICE

STEPHEN D. HARTOG, OF ST. LOUIS, MISSOURI, ASSIGNOR, BY MESNE ASSIGNMENTS, TO THE CLEVELAND TRUST COMPANY, OF CLEVELAND, OHIO, A CORPORATION OF OHIO

PISTON

Application filed February 16, 1920. Serial No. 359,137.

This invention relates to piston, more particularly to pistons for use in internal combustion engines.

The piston is the movable member within the cylinder of the engine and in the internal combustion engine the head portion of the piston is subjected to direct contact with the high heat temperature caused by the frequent explosions of the ignited gases. The piston unlike the cylinder is not provided with means for cooling or controlling its temperature and the head portion thereof, quite frequently attains a temperature of 750 to 1000 degrees Fahrenheit. This heat temperature causes the piston to expand and this expansion of the piston is greater than that of the cylinder in which it operates, consequently, the piston must be smaller in diameter than the diameter of the bore of the cylinder to admit of its expansion allowing the piston movable action in the cylinder free from binding, which would otherwise occur were the piston made to a size to fit the cylinder when cold.

The head portion of the piston receives its heat by direct contact, the body portion by transmission, the head portion therefore must be made smaller than that of the body portion.

The piston as thus made would yet be unsuccessful operatively if it were not for the use of split metallic packing rings employed solely to pack the space between the piston and the cylinder and ordinarily positioned in grooves cut in the head section of the piston. The piston as ordinarily made with grooves and packing rings therein lack the requisite features of a more desirable construction in that the looseness of the piston tends to wear the cylinder out of cylindrical truth. The delicate structure of the rings causes them to lose their tension due to the high heat temperature to which they are subjected, consequently, failing in their function to properly pack the cylinder against leakage, causing loss of compression, also permitting the lubricating oil not only to enter the combustion chamber resulting in irregular ignition, but also permitting lubricating oil to secrete beneath the rings between their inner surface and the bottom of the grooves resulting in the formation of carbon therebetween causing a solid mass to form which forces the rings against the cylinder wall and not infrequently results in scoring the cylinder.

The present invention is designed to overcome all of the objections above described and as inhering in the prior art construction, by constructing the piston in such a novel way as will eliminate the objections referred to and to such ends the invention comprises a piston having a head and body free from ring grooves. The head and body united by suitable ribs constructed in a manner providing a yielding capacity. The body of the piston being parted from the head and a slit or series of slits cut through the body and terminating at the parting between the head and the body. Sealing means for the head and body and positioned in the space therebetween.

The object therefore, of the present invention is to construct a piston free from rings and ring grooves, a piston made the reverse of present practice in that it is initially larger in diameter than the diameter of the bore of the cylinder, a piston characterized by the feature of being expansible and contractable automatically under the varying condition to which it is subjected, a piston enabled, by its construction, to fit the cylinder snugly at all times.

For the purpose of enabling others to clearly understand, make, and operate this invention the following description is given supplemented by the accompanying drawings, in which:

Figure 1 is a vertical elevation partly in section as of the line X—X Figure 3.

Figure 2 is a vertical side elevation viewed in the direction indicated by the arrow Figure 3.

Figure 3 is a plan view.

Figure 4 is a plan view in section of Figure 2 as of the line Z—Z Figure 2.

Figure 5 is a fragmentary view in elevation of a member part of this construction.

Figure 6 is a side view of Figure 5.

In the drawings like numerals of reference indicate corresponding parts throughout the several figures. The numeral 10 designates

the head portion of this construction, 11 the body portion, the portions 10 and 11 are united integrally by internal ribs 12 a portion of which has an intersection integrally with the head 10 and the other portion extends radially and has its intersection with the body 11. The ribs 12 have bosses 13 f med thereto which are drilled or bored to receive a pin 14 which connects the piston with the other operable parts of the engine. The ribs 12, are especially constructed to support and unite the head 10 and the body 11 and also to support bosses 13, experience has proven this construction to have an advantage in that of preventing distortion of the body 11, due to the stresses to which a piston is subjected by reason of the angularity of the different positions of the connecting rod while the engine is in operation. The ribs 12, in this case carry the parts connecting the piston with the engine more yieldingly than would be the case were the bosses 13 directly supported by the body 11, resulting in a more smoothly running engine having less vibration. The radially extending portion of the r. 12, is not connected with the head 10, there being a space 15, between the under side of the head 10, and the upper end of the ribs 12, this permits the U shaped cross section of the ribs 12, to have a yielding effect when in operation both in lateral and circular direction, that is to say the body 11, will yield diametrally and circularly when subjected to pressure from the sides.

In the manufacture of this improved construction of piston the head 10, the body 11, with ribs 12, and bosses 13, are cast to form from cast iron or suitable alloy composition metal the hole in the bosses 13, for the connecting pin 14, is cored to approximately the size to which it is finally to be finished the cored hole extending through the body 11, in alignment with the hole in the bosses 13, the space 15, between the under side of the head 10, and the top of the radial portion of the ribs 12, is also cored at the time of casting the entire body. The external surface of the head 10, and the body 11, is subjected to a machining process for the purpose of dressing the head 10, and to size the body 11, so that it will properly fit into the cylinder. At this point a change is made just the reverse of that which is the practice in sizing the conventional type of pistons for instead of machining the body of the piston smaller than the bore of the cylinder into which it is to operate, as is the common practice, my improved piston is machined to a size approximately of .005 of an inch larger than the bore of the cylinder.

When the head 10, and body 11, are thus machined to size the head 10, and the body 11, are then parted from each other at 16, by using a very thin parting tool and cutting through the body 11, adjacent the head 10, a very thin opening 16, is effected parting the head 10, from the body 11.

The next operation is to cut very thin slits 17, adjacent the intersection of the radial ribs 12, with the body 11, cutting through the body 11, and longitudinal of its axis terminating at the parting 16, just beneath the head 10. The resulting consequences of this operation renders the body 11, resilient, that is, the body will yield radially and circularly so that it can be placed tensionally in a cylinder having a bore less in diameter than that to which the piston was sized.

The piston thus made will fit the cylinder very properly but it would not prevent the compression leakage or the escapage of gases through the parting at 16, between the edge of the head 10, and the edge of the body 11. T effect a seal at the parting 16, a thin sheet metal ring 18, Figures 5, and 6, is inserted into this space, this ring is split at 19, with lapping portions 20, one above the other for a distance of about ⅛ of an inch.

The function of the split metal ring 18, is to to seal the opening 16.

From the foregoing description it is clear that this construction fulfills the purpose for which it is intended. The body 11, being resiliently expansible and contractable renders the use of split metal piston rings unnecessary, doing away entirely with grooves cut in the piston for the rings, eliminating this source of danger to the cylinder by reason of the accummulation of carbon therein which tends to build up beneath the rings forcing them against the cylinder walls causing the scoring of the cylinder.

It is finally to be noted that the body portion 11, is turned to a size over its full length to an amount approximately .005 of an inch larger than the bore of the cylinder into which it is to operate. The effect of splitting the body 11, at diametrically opposite position as at 17, and assisted by the U shaped portion of ribs 12, provides the condition for uniform circular expansion and contraction of the body 11, effecting a uniform tensional fit in the cylinder.

It is understood that minor changes may be made in the size, form and shape of this structure without departing from the spirit of this invention within the scope of the appended claims.

Having thus described the invention what I claim and desire to secure by Letters Patent is:

1. A piston having its head and body integrally connected by means of internal yielding ribs, a parting between the head and body, slits cut through said body, sealing means for said head and body, and means provided on said internal ribs adapted to form engaging connection with operable parts for said piston.

2. A piston having internal yielding ribs

integrally connecting the head and body portions of said piston, said head and body portion being parted from each other, sealing means positioned in said parting between the head and body, slits cut through the body portion of said piston providing resiliency for said body and means provided on said internal ribs adapted to form engaging connection with operable parts for said piston.

3. In a piston of the class described, a cup-like head comprising a pressure receiving end and a wall portion, a skirt circumferentially disconnected from the wall portion of the head and divided from end to end, and skirt carriers connecting said skirt to the pressure receiving end, said skirt carriers being disconnected from the wall portion of the head and susceptible of being slightly flexed radially.

4. A piston comprising a head, a skirt having resilient sections separated from said head by a slit extending continuously around the piston, and means for yieldingly connecting said skirt sections with said head.

5. A piston having a skirt at least a portion of which is separated from the head by a slot in which a piston ring is adapted to be mounted, said portion of the skirt being supported from the head by a flexible interior rib member.

In confirmation hereof I hereto attach my signature.

STEPHEN D. HARTOG.

BLANK PAGE

[fols. 1803-1834] **DEFENDANTS' EXHIBIT 4-H(27).**

Prior Art Patent.

U. S. Patent No. 1,499,073, June 24, 1924,

To L. H. Pomeroy.

Piston.

(Filed January 27, 1934.)

732

June 24, 1924. 1,499,073

L. H. POMEROY

PISTON

Filed Sept. 4, 1919

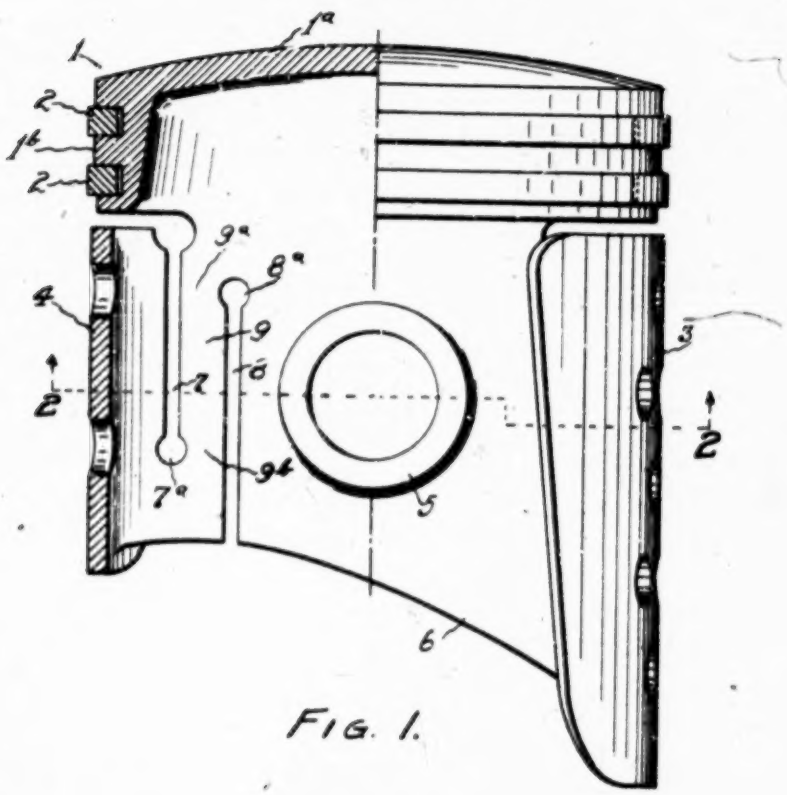

FIG. 1.

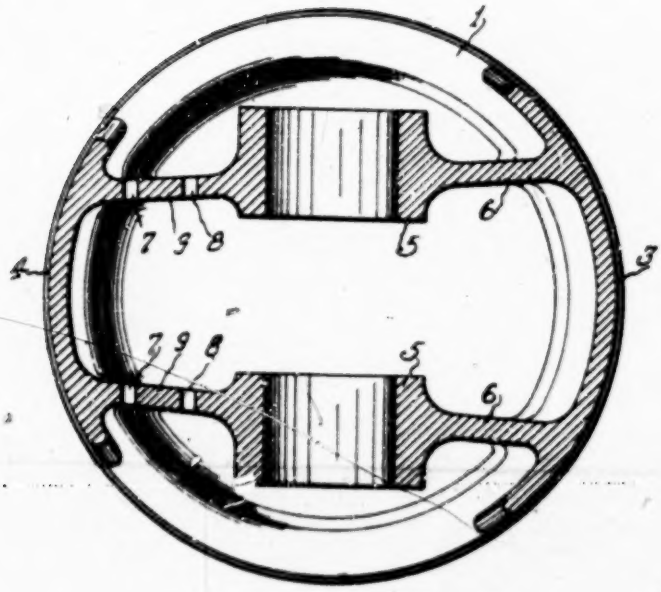

FIG. 2.

INVENTOR,
Laurence Henry Pomeroy
By Ray S. Sehr
his Attorney

Patented June 24, 1924. 1,499,073

UNITED STATES PATENT OFFICE.

LAURENCE HENRY POMEROY, OF CLEVELAND, OHIO, ASSIGNOR TO THE ALUMINUM COMPANY OF AMERICA, OF PITTSBURGH, PENNSYLVANIA, A CORPORATION OF PENNSYLVANIA.

PISTON.

Application filed September 4, 1919. Serial No. 321,696.

To all whom it may concern:

Be it known that I, LAURENCE HENRY POMEROY, a subject of the King of Great Britain and Ireland, residing at Cleveland, in the county of Cuyahoga and State of Ohio, have invented certain new and useful Improvements in Pistons, of which the following is a specification, reference being had therein to the accompanying drawings.

This invention relates more particularly to pistons adapted for use in internal combustion engines or under conditions in which the piston is subjected to considerable heat.

As is well known, the clearance with which the pistons of internal combustion engines are fitted is determined in a large measure by the difference in thermal expansion of the piston and the cylinder wall. This difference in thermal expansion is due to the fact that the working temperature of the piston is somewhat higher than that of the cylinder wall and, in some cases, to the use of different piston and cylinder materials having different co-efficients of thermal conductivity and expansion. Thus in the case of pistons of aluminum or magnesium alloys working in iron cylinders the co-efficient of expansion of the aluminum or the magnesium being higher than that of iron, it is necessary to give the pistons a larger clearance than is required for iron pistons working in iron cylinders. This larger clearance, with pistons as heretofore constructed, results in piston slap or knock when the engine is running cold at starting and, in fact, whenever the thermal conditions of the cylinder and piston are such that the large clearance required to obviate seizure at high temperatures exists between the piston and cylinder wall.

One object of the present invention is the provision of a piston of aluminum alloy or other light weight metal, that will operate without piston slap.

Another object of the invention is the provision of a piston so constructed that it can be given a small working clearance independent of differences of thermal expansion of the piston and the cylinder wall.

A further object of the invention is the provision of a piston capable of adjusting itself to the cylinder as wear occurs of the piston or cylinder or both.

Another object of the invention is the provision of a piston that will wear evenly from end to end.

Another object of the invention is the attainment of the ends above mentioned in an integrally cast piston.

These and other more or less incidental objects, are attained in the manner set forth in the following description of the preferred form of construction.

In the drawings,

Fig. 1 is a view partly in side elevation and partly in section of a piston embodying the invention.

Fig. 2 is a section on the line 2—2, Fig. 1.

My improvements are applicable to pistons of various forms of construction but in the drawings, for purposes of explanation, I have shown the invention applied to the slipper type of piston shown in United States Letters Patent No. 1,294,833, to H. R. Ricardo.

Referring in detail to the construction illustrated, the piston has a head section 1 comprising a crown 1^a and a side wall 1^b which is formed with grooves to receive suitable packing rings 2, 2. The guide section of the piston comprises diametrically opposite cylinder-engaging slippers 3 and 4, a pair of wrist pin bosses 5, 5 arranged between the slippers, and a pair of webs 6, 6 which join the slippers and bosses together and extend upward and merge with the crown and side wall of the head section of the piston, the entire piston being cast in one. Aside from the rings 2, 2, only the slipper parts 3, 4 are designed to contact with the cylinder wall, the piston differing in this respect from the prior trunk or skirted pistons which have a guide part in the form of a continuous sleeve or skirt that contacts with the cylinder wall on all sides.

In the construction shown the slippers 3 and 4 are made unequal in size, the larger slipper 3 being designed to take the angular thrust or reaction of the connecting rod during the explosion stroke of an internal combustion engine, while the smaller slipper 4 is designed to take the angular thrust during the compression stroke of the engine. The above described features of the construction are characteristic of the Ricardo slipper piston.

My improvements constituting the present invention are effected by forming the piston

so that some part of the guide structure is capable of resiliently yielding at points between the cylinder-engaging surfaces on opposite sides of the wrist pin to compensate for differences in thermal expansion of the piston and cylinder and I prefer to make the guide structure so that it will yield more readily between the wrist pin bosses and the cylinder-engaging surface which takes the thrust during the compression stroke of the piston, than between said bosses and the cylinder-engaging surface which takes the thrust during the explosion stroke. The means, when applied to the slipper type of piston illustrated, that the major yield shall occur between the pin bosses 5 and the cylinder-engaging surface of the slipper 4, and in the construction illustrated I have made provision for a resilient yielding in the webs 6, 6 which permits movement of the slipper 4 toward and from the slipper 3. To secure relative movement of the slipper 4 in parallelism, the web structure is formed to yield in two separated sections, which are preferably adjacent the respective ends of the slipper.

In the construction illustrated this is accomplished by forming each of the webs 6 with two parallel slots 7 and 8, the slot 7 being open at its upper end and closed at its lower end, while the slot 8 is closed at its upper end and open at its lower end. The slots 7 and 8 terminate at their closed ends with enlarged cylindrical aperatures 7^a and 8^a, respectively. Thus it will be seen that the slipper 4 is supported by elongated strips or sections 9 of the webs 6, and each of the sections 9 has reduced and weakened cross sections at 9^a and 9^b, so that any yielding of the web structure is localized at these points 9^a and 9^b.

My improved form of construction can be applied to pistons cast of any suitable metal but it is especially useful in connection with pistons of aluminum alloy or other light metals having high co-efficients of thermal expansion in comparison with iron as it makes it possible to fit such pistons with as small a clearance as is possible with iron pistons of prior forms of construction. Iron pistons of internal combustion engines fitted with a clearance of 0.00075 inch per inch of piston diameter are found to operate with substantial freedom from piston slap, and pistons of aluminum alloy made in accordance with my invention can readily be operated with similar clearances. Indeed a still smaller clearance is made possible by my invention.

In the operation of aluminum pistons of my improved form of construction, asuming a cold working clearance of 0.00075 inch per inch of piston diameter, or less, to insure freedom from piston slap when starting, as the engine heats up the excess expansion of the piston as compared with the surrounding cylinder wall of iron will reduce this clearance; but as the clearance approaches zero the construction of the piston webs permits them to yield so as to compensate for the excess expansion of the guide section of the piston and all danger of the seizing of the piston is obviated. When the engine is stopped and the parts again cool down the resilience of the web structure causes it to return to normal form and a suitable small clearance between the piston guide and the cylinder wall is maintained. It will, of course, be understood that the piston head proper is given a smaller diameter than the guide and does not function as a guide. As has been explained the yielding of the web structure occurs at the points 9^a and 9^b adjacent to the upper and lower parts of the slipper 4 so that the slipper 4 is maintained in parallelism with the axis of the cylinder. This insures uniform contact and wear throughout the full length of the slippers. As only a relatively light thrust, incident to the compression of the combustible charge in the engine cylinder, is applied to the smaller slipper 4, the resilient web structure is able to sustain the stresses to which it is subjected, it being possible, of course, to make the guide structure between the wrist pin bosses and the cylinder-engaging surface of the slipper 3 adequately strong to sustain the heavy thrust due to the explosion of the engine charge. This is an important feature of my invention since in most, if not all, cases it is found that a construction that is capable of yielding sufficiently to adequately compensate for differences of expansion, will fail if subjected to the angular thrust of the connecting rod in the working or explosion stroke of the piston.

It is to be understood that the dimensions of the yieldable web sections, as at 9^a and 9^b, will be determined by the diameter of the piston and other factors such as the compression pressure and the maximum engine speed, the requirements being that the web sections 9^a and 9^b yield sufficiently to prevent seizing under the pressure set up between the cylinder wall and the piston due to thermal expansion, but do not yield too much under the thrust due to compression and inertia, and that they yield, whether under said expansion pressure or under the thrust due to compression and inertia, in a manner to maintain the slipper 4 parallel to the piston axis.

It will be seen that the amount of yielding in the piston webs will be determined, for the most part, by the cold working clearance of the piston. By making this clearance sufficiently small the clearance will be rendered nil when the parts heat up in operation and a resilient pressure of the slippers against the cylinder wall will be secured.

Under these conditions the resiliency of the piston web structure will insure the maintenance of close working contacts between the slippers and the cylinder wall as wear of these parts occurs and, as above noted, the movement of the slipper 4 parallel to the piston axis will insure a uniform contact and wear of the parts throughout the full lengths of the slippers. In other words, my resiliently yieldable piston structure, by compensating for excess expansion of the piston, secures an automatic adjustment of the piston to the cylinder as wear occurs.

My improvements, while applicable in their broader aspects to other types of pistons, are especially applicable to the slipper type of piston illustrated and it will be seen that this is due, in part at least, to the fact that the yieldable web parts have no contact with the cylinder wall and thus are free, in so far as the cylinder is concerned, to accommodate themselves to the movement of those parts which do engage the cylinder.

It is obvious that my invention can be embodied in various forms of construction and it is to be understood that it is not limited to the particular construction illustrated in the drawing except as specified in the following claims.

What I claim is:

1. An integrally cast piston comprising a head, diametrically opposite guide slippers, a pair of wrist pin bosses between the slippers and a pair of webs joining the head, slippers and bosses together, said webs being formed at points between the bosses and one of the slippers so as to resiliently yield and permit movement of said slipper toward and from the other slipper.

2. An integrally cast piston comprising a head, diametrically opposite guide slippers, a pair of wrist pin bosses between the slippers and a pair of webs joining the head, slippers and bosses together, said webs being formed at points between the bosses and one of the slippers so as to resiliently yield and permit movement of said slipper in parallelism toward and from the other slipper.

3. An integrally cast piston comprising a head, diametrically opposite guide slippers, a pair of wrist pin bosses between the slippers and a pair of webs joining the head, slippers and bosses together, said webs being formed between the bosses and one of the slippers each with a pair of parallel slots of which one is open at its end adjacent the piston head and the other is open at its end away from said head.

4. A piston comprising a head and a guide structure connected thereto having wrist pin bosses and cylinder-engaging surfaces on opposite sides of the bosses, the guide structure being adapted to resiliently yield to a greater extent between the pin bosses and one of said cylinder-engaging surfaces than between the said pin bosses and the other cylinder-engaging surface.

5. A piston having a head and a guide structure connected thereto, said guide structure comprising diametrically opposite parts having cylinder-engaging surfaces, wrist pin bosses, between said opposite parts, and means for joining said bosses and cylinder-engaging parts, said joining means being arranged not to engage the cylinder and the guide structure being adapted to resiliently yield to a greater extent between the pin bosses and one of said cylinder-engaging surfaces than between the said pin bosses and the other cylinder-engaging surface.

6. A piston having a head and a guide structure connected thereto, said guide structure comprising diametrically opposite slippers having cylinder-engaging surfaces, wrist pin bosses between the slippers and means joining said bosses and slippers together, the guide structure being adapted to resiliently yield to a greater extent at points between the pin bosses and the cylinder-engaging surfaces of one slipper than between the said pin bosses and the cylinder-engaging surfaces of the other slipper.

7. A piston having a head and a guide structure connected thereto which comprises diametrically opposite cylinder-engaging parts, wrist pin bosses between the cylinder-engaging parts, and means joining said bosses and cylinder-engaging parts together, the said joining means being resiliently yieldable to a greater extent on one side of the wrist pin bosses than on the other side thereof.

8. A piston having a head and a guide structure connected thereto which comprises diametrically opposite slippers, wrist pin bosses between the slippers and means joining said bosses and slippers together, the said joining means being resiliently yieldable to a greater extent on one side of the wrist pin bosses than on the other side thereof.

9. A piston as claimed in claim 4 characterized by being integrally cast.

10. A piston as claimed in claim 5 characterized by being integrally cast.

11. A piston as claimed in claim 6 characterized by being integrally cast.

12. A piston as claimed in claim 7 characterized by being integrally cast.

13. A piston as claimed in claim 8 characterized by being integrally cast.

In testimony whereof, I hereunto affix my signature.

LAURENCE HENRY POMEROY.

BLANK PAGE

[fol. 1835] **DEFENDANTS' EXHIBIT 4-L.**

File Wrapper and Contents of Gulick Patent in Suit.

(Filed January 27, 1934.)

390

DEPARTMENT OF COMMERCE

UNITED STATES PATENT OFFICE

To all persons to whom these presents shall come, Greeting:

This is to Certify that the annexed is a true copy from the records of this office of the File Wrapper and Contents, in the matter of the Letters Patent of Edward J. Gulick, Assignor, by Mesne Assignments, to The Cleveland Trust Company, Number 1,815,733, Granted July 21, 1931, for Improvement in Pistons.

IN TESTIMONY WHEREOF I have hereunto set my hand and caused the seal of the Patent Office to be affixed, at the City of Washington, this fourteenth day of January, in the year of our Lord one thousand nine hundred and thirty-three and of the Independence of the United States of America the one hundred and fifty-seventh.

THOMAS E. ROBERTSON,
Commissioner of Patents.

(Seal)

ATTEST: D. E. WILSON,
Chief of Division.

(Old Wrapper with Record of Actions Inside)

Number (Series of [1925]* 1915) **1,815,733**

204661

PATENT No. 1815733

1917

Dated Jul 27 1931

Div. 12 (Ex'r's Book) 147-179-B

Name Edward J. Gulick

of
State of **(See jacket inside)**
Invention

Original	Renewed
Application filed complete , 19	
[fol. 1836] PARTS OF APPLICATION FILED	Certificate of Correction
Petition, Specification, Oath, First Fee $20, 1 sheets Drawings, , 19	September 22, 1931
Examined and passed for Issue May 16 1931 , 1931	Reexam'd and passed for Issue , 19
C. C. Henry Exr. Div. 12	Exr. Div.
Notice of Allowance May 16 1931	Notice of Allowance , 19
By Commissioner.	By Commissioner.
Ex cl $13.00	
Final Fee $25 June 18, 1931	Final Fee , 19
Ex cl $10.00 June 25, 1931	
Attorney	
Associate Attorney	**Slip**

No. of Claims Allowed 43 Print Claim[s]* 1 in O. G. Class 74-108.

Title as Allowed Piston

Division of App., No....., filed....., 19...

[*Matter enclosed in brackets struck out in copy.]

733 12426

($15 Rec'd Nov 30 1917 C. C. U. S. Pat. Office Ck a)

204661

Division 12, Paper No. 1

Dec 3 1917

U. S. Patent Office

PETITION

To the Commissioner of Patents:

Your Petitioner, Edward J. Gulick, residing at Elkhart, County of Elkhart, State of Indiana, and whose P. O. Address is P. O. Box 553, Elkhart, Indiana, prays that Letters Patent of the United States may be granted to him for the Improvement in Hydrocarbon Motors, set forth in the annexed specification; and he hereby appoints Milton Tibbetts, (Registration No. 5403), of the City of Detroit, County of Wayne, State of Michigan, his Attorney, with full power of substitution and revocation, to prosecute this application; to make alterations and amendments therein; to receive the patent, and to transact all business in the Patent Office, and [fol. 1837] before the Courts, D. C., connected with the application or with the patent granted thereupon, and to do all other lawful acts and things which he if personally present could.

EDWARD J. GULICK.

SPECIFICATION

To Whom It May Concern:

Be it known that I, Edward J. Gulick, a citizen of the United States, and resident of Elkhart, Elkhart County, State of Indiana, have invented certain new and useful improvements in [Hydrocarbon Motors]* **Pistons** of which the following is a specification:

[*Matter enclosed in brackets struck out in copy.]

1. 204661—1

MT:MEG 12427

B-1733

SB

per H This invention relates to [hydrocarbon motors **per H** and particularly to]* pistons [therefor.]*

Title change per C per H One of the objects of the present invention is to provide a piston which [is]* **will** not [adapted to]* expand against the cylinder wall to such an extent as to **seize** [sieze]* or stick.

per E Another object of the invention is to provide a piston with a skirt **or guide portion** slightly separated from the head of the piston and split longitudinally so that it will not expand in circumference with a force great enough to cause the piston to stick in the cylinder.

per E Another object of the invention is to provide a piston with **improved lubricating means for** [lubricating conduits leading from the exterior of the piston to]* the piston pin bosses.

Insert H¹ Another object of the invention is to rigidly support the piston pin bosses of a piston from the piston walls. **(4) H¹**

Other objects of the invention will appear from the following description taken in connection with the drawings which form a part of this specification, and in which:

Fig. 1 is a longitudinal sectional view through a piston embodying the invention;

Fig. 2 is similar to Fig. 1 taken at right angles thereto, being on the line 2—2 of Fig. 3;

[fol. 1838] Fig. 3 is a transverse section substantially on the line 3—3 of Fig. 1;

Fig. 4 is a transverse section on the line 4—4 of Fig. 1;

2. 204661—2

12428

Fig. 5 is a view similar to Fig. 1, showing a slightly different form of piston embodying the invention; and

Fig. 6 is a top view of the piston shown in Fig. 5.

[*Matter enclosed in brackets struck out in copy.]

Referring to the drawings, 10 represents the
Per E head **portion** of a piston and 11 is the skirt **or**
" E **guide portion** which is shown as separated at its periphery from the head leaving an annular slit or opening 12 therebetween. The head portion of the piston is provided with an annular groove 13 for a piston ring 14, and the upper end of the skirt **portion**
Per E 11 is formed with **a recess shown in the form of** an annular groove 15 for the purpose of collecting the oil that may be scraped from the cylinder during the reciprocation of the piston.

The piston is also provided with a pair of separated piston pin bosses 16 which are formed with integral supporting flanges 17 extending around the bosses and arranged intermediate their ends. These flanges extend laterally of their respective bosses in the form of webs 18 which integrally connect with the wall of the [skirt]* **guide**
Per E **portion** 11 as shown in the drawings. Since there
" E are two of these webs **or walls** 18 for each of the bosses 16 there are therefore four connections of
" E the webs 18 to the skirt **or guide portion** 11. These connections are in the four longitudinal lines as shown at 19.

The flanges 17 also extend upwardly from the
" E bosses in the form of webs **or walls** 20 leading to the head 10 and thereby connecting the bosses with the head. Thus, the bosses are connected to both the head and the skirt so that the latter is held in its proper position directly beneath the head as shown in Figs. 1 and 2.

In order that the skirt may not expand an undue amount when the piston is heated, as under operating con-

Insert E^1 ditions, [it]* **(3)** E^1 is split longitudinally as at 21. This split is slightly diagonal to prevent
Insert E^2 wearing a groove in the cylinder **(3)** E^2
[fol. 1839] The piston is further provided with
Per E conduits 22 **shown** in the form of pipes extending from the **recess or** groove 15 at the upper end of the skirt to openings 23 in the bosses. There is shown one

---

[*Matter enclosed in brackets struck out in copy.]

conduit for each boss and it will be understood that the oil collected in the groove 15 by the piston in its reciprocation is led down through the conduits 22 to the interior of the piston pin boss to thereby lubricate the bearing.

The skirt 11 is formed with openings 24 in its side registering with the openings through the bosses 16 so that the piston pin may be inserted.

Insert [E³]* F¹ **(7)** [E³]* F¹

It will be seen that in addition to providing a piston with a split [skirt,]* **guide portion** the above described construction also provides [an extremely]* **a longitudinally** rigid connection between the piston pin bosses and the [skirt]* **guide portion** of the piston, which construction may be used either with or without the split [skirt]* **guide portion** and separated head. The arrangement of the supporting flanges 17 between the ends of the piston pin bosses and the connections of those flanges with **both** the piston [skirt]* **guide portion and the head** provide a particularly strong [support for the bosses.]*

Per E " E " E " E " E Insert E⁴ **(5)** E⁴

In Figs. 5 and 6 the webs **or walls** 18 are slightly curved between the flanges 17 and the [skirt wall]* **guide portion** to thereby distribute the connection of the bosses to the [skirt]* **guide portion** more evenly around the [skirt]* **piston.** Otherwise the showing is substantially the same as in the other figures.

Per E " E " E " E Insert E⁵ **(4)** E⁵

It will be understood further that my invention is not limited to the details of construction shown and other forms may be used without departing from the spirit or scope of the invention.

(X)

Having thus described my invention, what I claim and desire to secure by Letters Patent is:—

Per A 1. A piston comprising a head, a skirt separated at its periphery **throughout its circum-** [fol. 1840] **ference** from the head, and pin bosses

[*Matter enclosed in brackets struck out in copy.]

	connected to the head and to the skirt, said skirt
Per A	being split longitudinally **from its upper edge to its lower edge and** at one side between its con-
Per E	nections to said bosses.
	2. A piston comprising a head, a skirt sep-
per A	arated at its periphery **throughout its circumference** from the head, and pin bosses connected to the head and to the skirt, said skirt being
" A	split diagonally **from its upper edge to its lower edge** between its connections to said bosses.

	1E. [3.]* A piston comprising a head, a skirt separated at its periphery from the head, and pin bosses connected to the head and to the
Per E	upper and lower parts of the skirt, said skirt being split longitudinally at one side between its connections to said bosses.
	2E. [4.]* A piston comprising a head, a skirt separated at its periphery from the head, and
Per A	pin bosses **integrally** connected to the head and
Insert A^1	to the upper and lower part of the skirt, **(4)** A^1
	3E. [5.]* A piston comprising a head, a skirt separated at its periphery from the head, and
Per A	pin bosses **integrally** connected to the head and
Insert A^2	to the skirt in four longitudinal lines, **(4)** A^2
	4E. [6.]* A piston comprising a head, a skirt separated at its periphery from the head, and
Per A	pin bosses connected to the head, and **also connected** to the skirt **both** above and below the
Insert H^2	**bosses, (2)** H^3
per H	**5E.** [7. A]* **An integrally cast** piston comprising a head, a skirt separated at its periphery
" A	from the head, and pin bosses **integrally** connected to the head and to the skirt at both sides
Insert A^3	and in the zone of said bosses, **(2)** [H]* A^3

(over)

1092870	8. A piston comprising a head, a skirt, pis-
Per A	ton pin bosses, and connections from the bosses to the head and skirt, substantially as described.

[*Matter enclosed in brackets struck out in copy.]

Per H

6E. [8a. 9. A]* **An integrally cast** piston comprising a head, a skirt, separated piston pin bosses within the skirt, and an integral flange on each of said bosses intermediate its ends, said flange extending from both sides of the boss to the piston skirt and integrally united therewith

Insert H⁴

in the zone of the boss, **(2) H⁴.**

Per H

7E. [9a. 10.]* A piston comprising a head, a skirt, separated piston pin bosses **integral with the head and disposed** within the skirt, and ingral [means]* **transversely flexible webs** extending from the intermediate part of each of said bosses to the skirt wall in the zone of the boss for supporting the bosses from the adjacent part of the skirt.

Stabel

10a. [11.]* A piston comprising a head and skirt, said skirt having an annular groove, pin bosses within the piston, and means for con-

Per A

veying oil from said **exterior** groove to said

Per B

bosses.

" A

11a. [12.]* A piston comprising a head and skirt, said skirt having an annular **exterior**

" A

groove, pin bosses within the piston[,]* **spaced from the wall of the skirt** and [a conduit]* **pipes** leading from said groove to the interior of said bosses.

" A

8E. [10B. 12a. 13.]* A piston comprising a head, a skirt having its periphery separated from the head, pin bosses in the piston **spaced from the wall of the skirt** and conduits leading from the top of said skirt to the interior of said bosses.

Insert A⁴

9E. [11B. 13a. 14.]* A piston comprising a head, a skirt having its periphery separated from the head, pin bosses in the piston **(2) A⁴**

Per A

means **integrally** connecting the bosses with the head and skirt, and [a conduit]* **pipes** leading from the upper part of the skirt to the bosses.

[*Matter enclosed in brackets struck out in copy.]

10E. [12B. 14ε. 15.]* A piston comprising a head, a skirt, separated piston pin bosses within the skirt, and an intermediate flange on each of said bosses intermediate its ends, said flange extending laterally from both sides of the boss [fols. 1842-1874] to the piston skirt in a curve and integrally united with the skirt in the zone of the boss.

Insert C[1] **(X)**

6. 204661—6

12432

In testimony whereof I affix my signature.

EDWARD J. GULICK.

OATH

COUNTY OF ELKHART,
STATE OF INDIANA, SS.

EDWARD J. GULICK, the above named petitioner, being sworn or affirmed, deposes and says that he is a citizen of the United States, and resident of Elkhart County, State of Indiana, that he verily believes himself to be the original, first, and sole inventor of the Improvement in HYDROCARBON MOTORS described and claimed in the annexed specification; that he does not know and does not believe that the same was ever known or used before his invention or discovery thereof, or patented or described in any printed publication in any country before his invention or discovery thereof, or more than two years prior to this application, or in public use or on sale in the United States for more than two years prior to this application; that said invention has not been patented in any country foreign to the United States on an application filed by him or his legal representatives or assigns more than twelve months prior to this application; and that no application for patent on said improvement has been filed by him or his representatives or assigns in any country foreign to the United States.

EDWARD J. GULICK.

Sworn to and subscribed before me this 23rd day of November, 1917.

WARD A. BERNET,
Notary Public.

(Notarial Seal)

My commission expires May 4, 1921.

204661—7

* * * * * * *

[*Matter enclosed in brackets struck out in copy.]

[fol. 1875] Here follows proceedings in Patent Office on Gulick application, including Patent Office letters and amendments, which, by agreement of the parties, are omitted except for the following abstract from an amendment filed September 11, 1922:

"Insert the following claims:

* * * * * * *

"28. A piston comprising a head and body, internal yielding ribs supporting the head and body, and means on said ribs adapted to form engaging connection with operable parts for said piston.

* * * * * * *

"Claims 26 and 27 are identical with Claims 5 and 10, respectively, of the patent to Long, No. 1,395,441.

"Claim 28 is identical with Count 1 of the Issue in Inter-

ference No. 43,351, Hartog vs. Pomeroy, which has recently been brought to applicant's attention.

"Applicant seems clearly entitled to make Claims 26, 27 and 28 and believes that he is the first inventor of the subjects matter defined in said claims.

"In the drawing, the reference numeral "19" is incorrectly applied in Figs. 1 and 5. Permission is requested to [fols. 1876-1926] have these numerals changed to agree with Fig. 3 and with the specification as shown on the print filed herewith.

Respectfully submitted,
EDWARD J. GULICK,
By MILTON TIBBETTS,
His Attorney."

"Detroit, Mich.
September 8, 1922.

(Here follows 1 photolithograph, side folio 1927-2026)

No. 204661

746A

147
179 B

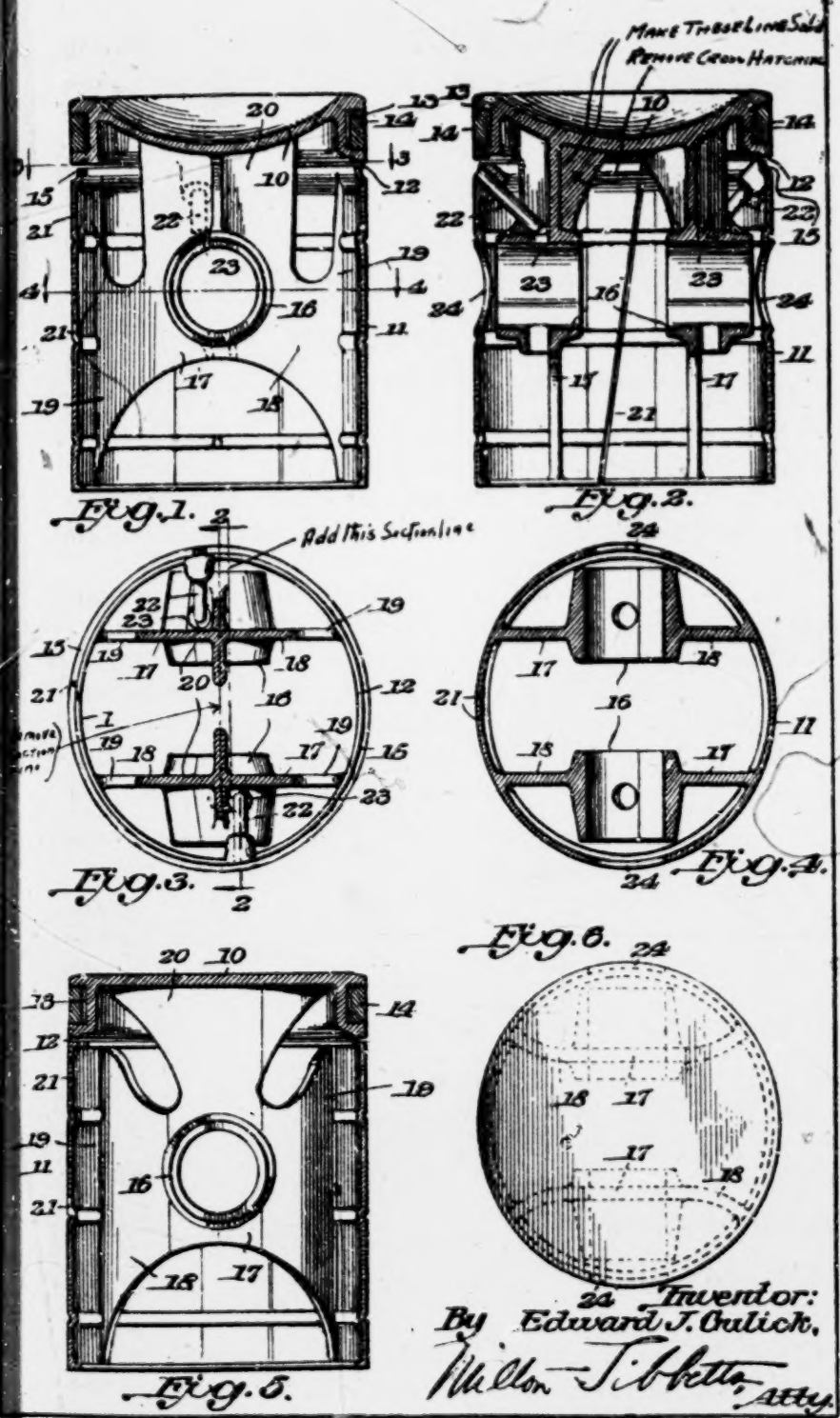

Fig. 1.

Fig. 2.

Fig. 3.

Fig. 4.

Fig. 5.

Fig. 6.

Inventor:
By Edward J. Gulick,
Milton Tibbetts, Atty.

Apr 2 1918
Sept 14, 1918

204661 103

1927-2026

Tightly Bound

BLANK PAGE

[fol. 2027] **DEFENDANTS' EXHIBIT 4-L$_2$.**

File Wrapper and Contents of Jardine Patent in Suit.

(Filed January 27, 1934.)

390

DEPARTMENT OF COMMERCE

UNITED STATES PATENT OFFICE

To all persons to whom these presents shall come, Greeting:

THIS IS TO CERTIFY that the annexed is a true copy from the records of this office of the File Wrapper and Contents, in the matter of the Letters Patent of Frank Jardine, Assignor, by Mesne Assignments, to The Cleveland Trust Company, as Trustee, Number 1,763,523, Granted June 10, 1930, for Improvement in Pistons.

IN TESTIMONY WHEREOF I have hereunto set my hand and caused the seal of the Patent Office to be affixed, at the City of Washington, this fourteenth day of January, in the year of our Lord one thousand nine hundred and thirty-three and of the Independence of the United States of America the one hundred and fifty-seventh.

THOMAS E. ROBERTSON,
Commissioner of Patents.

(Seal)

ATTEST:
D. E. WILSON,
Chief of Division.

1920

RENEWAL

Number (Series of 1915), 1763523

[364997]* 450898 (Ex'r's Book) 162-44-D

Div. 12 Patent No. 1763523
Jun 10 1930

Name Frank Jardine, Assor. by mesne assigts. to [Aluminum Manufactures, Company of America, Incorporated,

[*Matter enclosed in brackets struck out in copy.]

of Cleveland, Ohio, Pittsburgh, Penna., a corp. of Dela-
[fol. 2028] ware, Pennsylvania.] * The Cleveland Trust Company; of Cleveland, Ohio, a corp. of Ohio, as Trustee. of Cleveland,

County of
State of Ohio
Invention Pistons.

PARTS OF APPLICATION FILED

	ORIGINAL		RENEWED	
Petition	Mar. 11, 1920			Mar. 9, 1921
Affidavit	" ", 1920			, 192
Specification	" ", 1920			, 192
Drawing 2 shts.	" ", 1920			, 192
Photo Copy	May 18, 1923			, 192
First Fee Cash $15.	Mar. 11, 1920	$15,		Mar. 8, 1921
" " Cert.	, 192			, 192
Appl. filed complete	Mar. 11, 1920			Mar. 9, 1921

Examined and Passed for Issue May 9, 1930
Sept. 8, 1920
P. P. Pierce Exr. Div. 12 P. P. Pierce Exr. Div. 12
Notice of Allowance Sept 8-1920 May 9, 1930
By Commissioner. By Commissioner.
Final Fee Cash , 192 $20 May 15, 19[2] *30
" " Cert. , 192 , 192
Patented Jun 10 1930

Attorney [Ray Stewart Gehr] *
[Euclid Bldg., Cleveland Ohio] *

[Associate] * Attorney [L. D. Watts, 307 Bangor Bldg.,] *
[451 Lennox Building, East 9th & Euclid Ave.,] *

(No. of Claims Allowed [7]* 12) Print Claim[s]* [5]* 1 in O. G.

(Cl 74-108)

[*Matter enclosed in brackets struck out in copy.]

Title as Allowed **Pistons**

Substitute Attys. Richey, [Slough]* **& Watts,** [1213 Ulmer Bldg.,]*

1983 Union Trust Bldg Cleveland, Ohio

Division of App., No. ....., filed ....., 191..

[fol. 2029]

(**$15** Rec'd Mar 11 1920 C. C. U. S. Pat. Office)

Ch

Mar 15 1920

U. S. Patent Office
Cleveland, Ohio

364997

RAY STEWART GEHR

COUNSELLOR AT LAW

Washington
Ouray Building

Patents and
Patent Causes

Cleveland
Garfield Building

March 9, 1920.

Hon. Commissioner of Patents,
Washington, D. C.

Sir:

I enclose herewith for filing petition, specification, oath and drawings, also check for $15.00 constituting the application of Frank Jardine for patent on Pistons.

Respectfully yours,

RAY S. GEHR.

RSG FR
Enclosures

364997—1

[*Matter enclosed in brackets struck out in copy.]

I 884

364997

(Mail Room Mar 11 1920 U. S. Patent Office)

Insert Division 12, **Paper No.** 1

Mar 15 1920

U. S. Patent Office

PETITION.

To THE COMMISSIONER OF PATENTS:

Your petitioner, FRANK JARDINE, a citizen of the United States and a resident of Cleveland, in the County of Cuyahoga and State of Ohio, whose post-office address is care of The Aluminum Castings Company, Cleveland, Ohio, prays that Letters Patent may be granted to him for the improvement in Pistons, set forth in the annexed specification; and he hereby appoints Ray Stewart Gehr, of 1900 Euclid Building, Cleveland, Ohio, his attorney with full power of substitution and revocation, to prosecute this ap- [fol. 2030] plication, to make alterations and amendments therein, to receive the patent, and to transact all business in the Patent Office connected therewith.

Signed at Cleveland, County of Cuyahoga, State of Ohio, this 9th day of March 1920.

FRANK JARDINE.

SPECIFICATION.

To ALL WHOM IT MAY CONCERN:

Be it known, that I, Frank Jardine, a citizen of the United States, residing at Cleveland, in the County of Cuyahoga, and State of Ohio, have invented certain new and useful improvements in pistons, of which the following is a specification, reference being had therein to the accompanying drawings.

364997—2

(Hir.) I 885

My invention relates to pistons for internal combustion engines and especially to pistons formed of light weight metals or alloys.

The invention has for its chief object the construction of

a light alloy piston which, with relatively small initial clearance, will operate satisfactorily at all temperatures in an engine cylinder.

Another object of the invention is to produce a piston of the character noted that will lend itself to economic methods of manufacture.

Because of the high co-efficient of expansion of suitable light alloys such as aluminum alloys, as compared with iron, it is often difficult to fit an internal combustion engine satisfactorily operable with iron pistons, with light alloy pistons so that such pistons will not be noisy and will not pump oil when cold, or will not stick or score the cylinder wall when heated. I have found that these difficulties can be overcome by constructing a piston with its skirt or guide portion supported and slotted or divided in a manner to permit deformation and deflection of parts thereof without interfering with the performance of the essential functions of the respective parts.

To facilitate an understanding of the invention two forms or embodiments thereof are described hereinafter and are illustrated in the accompanying drawings in which

[fol. 2031] Fig. 1 is a view partly in side elevation and partly in section of a ["slipper" type]* piston constructed in accordance with my invention.

per B

Fig. 2 is a side elevation of the same piston viewed at right angles to Fig. 1.

Fig. 3 is a section on the line 3—3 of Fig. 1.

Fig. 4 is a section on the line 4—4 of Fig. 1.

Fig. 5 is a section on the line 5—5 of Fig. 1.

Fig. 6 is a view partly in side elevation and partly in section of a ["slipper" type]* piston of modified form.

per B

Fig. 7 is a side elevation of the same viewed at right angles to Fig. 6 and with parts broken away and shown in section.

Fig. 8 is a section on line 8—8 of Fig. 6.

Fig. 9 is a section on line 9—9 of Fig. 6.

[Matter enclosed in brackets, struck out in copy.]

Referring first to Figs 1 to 5, the piston shown
per B [is of the so called slipper type and]* comprises a
" B head portion 1 and a guide **or skirt** portion designated in its entirety by 2. The head portion consists of a head disc 3 and a peripheral flange 4 in which are grooves 4a for the ordinary piston rings 5. On the lower face of the head disc 3 are formed two depending webs 6 integral with the disc. These webs carry bosses 7 which are adapted to receive the ordinary wrist pin. Ribs 8 may be provided along the webs 6 between the head disc and the bosses for strengthening the webs 6 and supporting the inner ends of the bosses. Additional ribs 9 may be formed on the outer sides of webs 6 as shown to strengthen them and to support the outer ends of the bosses.

The guide portion 2 comprises two pairs of
per B [slipper]* **guide** segments 10 and 10a curved to conform to the engine cylinder, one pair being located on either side of the bosses. The segments are integral with the webs 6 and are supported and connected to the head portion 1 by means of these webs. The segments at their upper ends are separated from the flange 4 of head portion 1 by slots 11 and are further isolated from the head by slots 11a formed in webs 6. The segments of each pair are separated from one another by a longitudinally extending slot 12, said slot preferably being inclined or spirally arranged as shown. In the construction shown

per B [fol. 2032] the guide [slipper]* **portion** formed by

segments 10a is designed to take the diagonal thrust of the piston rod during the compression stroke of the engine and as said thrust is less than the corresponding
44 . thrust during the explosion stroke, said [slip-
per B per]* **portion 10a** is made narrower circumferentially
" B than the other [slipper]* **portion 10** so as to save weight.

The flange 4 of the head portion 1 has a smaller outer diameter than the guide portion 2, the diameter of the latter being only slightly smaller than the internal diameter of the cylinder in which it is to function.

[*Matter enclosed in brackets struck out in copy.]

In the operation of an internal combustion engine the piston usually is heated to a higher temperature than the cylinder wall and expands radially to a greater amount than the cylinder. This expansion reduces the clearance between the piston skirt or guide part and the cylinder wall and in the case of pistons not constructed according to my invention, if the initial clearance provided is small, scoring of the cylinder walls or piston, or seizure of the piston in the cylinder may result. With my invention, however, the guide segments 10, 10a, are capable of deformation or displacement as the piston guide parts expand, the segments being forced toward one another so as to tend to close up the
per B slots 12. The webs 6 and [slipper]* **guide** segments preferably are so designed that this displacement of the segments 10, 10a, is permitted by virtue of a bend-
per B ing of the webs 6 at points remote from the [slipper]*
" B **guide** segments. To this end, as shown in Fig. [5,]* **4**
per A the thickness of the [slipper]* **guide** segments is increased toward the webs 6 and the webs 6 are de-
" B creased in thickness from the [slippers]* **guide portions** inward toward the bosses to points in line with the inner ends of the slots 11a. This gives in effect a cantilever structure weakest at its support, namely, along
per A the dotted lines 13 in Figs. [3.]* **1 and 4**. Thus the reaction force of the cylinder wall on the outer faces
" B of the [slipper]* **guide** segments as the piston ex-

pands tends to cause bending of the webs 6 along said lines 13. Due to the bending of the web sections 6 and the forcing [fol. 2033] together of each pair of segments, the guide part of the piston may undergo a considerable thermal expansion without a corresponding increase in the outer diameter thereof and thus a small initial clearance can be used without danger of scoring or seizure of the piston.

By variation of the thickness and design of the webs 6 and the location of the slots 11a therein, the force necessary to cause the guide segments 10 and 10a to approach one another along the slot 12, or in effect to maintain the outer

---

[*Matter enclosed in brackets struck out in copy.]

diameter of the piston substantially constant, can be easily regulated. The webs 6 will tend to bend along a line extending vertically downward from the ends of slots 11a and if said slots are terminated closer to the guide segments 10, 10a the region of bending will be moved outward correspondingly. Likewise a thickening of the webs 6 near the bosses will tend to move the point of bending or flexing closer to the guide segments 10, 10a. An increase of the thickness of the webs 6 obviously will increase the force necessary to cause the guide segments 10, 10a to approach one another along the slot 12.

In Figs. 6 to 9 a modified form of piston is shown. The head portion 21 is formed with a head disc 22 and a depending peripheral flange 23 in which may be formed grooves 24 for the ordinary piston rings. Depending webs 25 are formed at diametrically opposite parts of the lower edge of the peripheral flange 23. These webs carry bosses 26 for the customary wrist pin, the inner ends of the bosses being supported by ribs 27 which join the webs 25 and extend from the inner ends of the bosses 26 to the lower side of the head disc 22, while the outer ends of said bosses are supported by ribs 27a.

On either side of the bosses 26 are formed pairs of guide segments 28 and 28a similar to those shown in

364997—6
I 889

Figs. 1 to 5. These segments are united with webs 25 as shown and are separated from the flange 23 by slots 29 and further isolated from the head by slots 29a in the walls 25. The guide segments of each pair are separated from one another by longitudinally extending slots 30.

It will be seen that this last form of construction is based upon the same principles as the first form and further detailed description is therefore unnecessary. The main difference between the last form of construction and that first described resides in the webs 25 which support the wrist [fol. 2034] pin bosses and the guide [slippers,]* portions said walls being joined to the head structure at the lower edge of the ring flange 23 rather than springing from the head disc as in the first form of construction.

per B 41

From the foregoing description the operation of pistons

[*Matter enclosed in brackets struck out in copy.]

embodying my improvements will readily be understood. It will be seen that an aluminum alloy piston embodying my invention can be fitted to the engine cylinder with a very small clearance and that compensation for the relatively large thermal expansion of the guide section of the piston is provided by the displacement of the guide segments which results from the reaction force of the cylinder wall on the outer faces of the guides. As above indicated the reaction force necessary to displace the guide parts and effect such compensation can readily be controlled by properly forming and proportioning the guide parts. In this connection it will be obvious to the designer that account must be taken of such factors as compression pressures, piston diameter and piston stroke as determining the lateral thrust to which the guide parts will be subjected. It is obvious that the compensating displacement of the guide parts should require a thrust great enough to insure adequate mechanical strength of the piston and small enough to obviate scoring of the piston and cylinder or seizure of the

364997—7
I 890

piston.

While I have shown my invention applied to the slipper type of piston as distinguished from the skirt type it is to be understood that the invention is essentially applicable to other forms of construction, the scope of the invention being indicated by the appended claims.

364997—8
I 891

What I claim is—**(B′ Cls. 1-2)**

I. In a piston for an internal combustion engine, the combination of a piston head comprising a disc having an integral peripheral flange formed with ring grooves, piston rings in said grooves, two pairs of curved members oppositely disposed with relation to the axis of the piston and together adapted to function as a cylinder-engaging guide, each pair of curved members being separated from the head flange [fol. 2035] and from each other by continuous air gaps, two webs which are integral with and spring from the head disc each being connected to and integral with one of the guide members of each of said pairs thereof and constituting the only connection between the face of the piston head disc and the guide members, and

Per C

wrist pin bosses formed in these webs in which they are so positioned as to lie between the pairs of guide members as set forth.

2. In a piston for an internal combustion engine, the combination of a piston head comprising a disc having an integral peripheral flange formed with ring grooves, two pairs of curved members oppositely disposed with relation to the axis of the piston and together adapted to function as a cylinder-engaging guide, each pair of curved members being separated from the head flange and from each other by continuous air gaps, two webs which are integral with the piston head, each being connected to and integral with one of the guide members of each of said pairs thereof and constituting the only connection between the piston head and the guide members, and wrist pin bosses formed in these webs in which they are so positioned as to lie between the pairs of guide members as set forth.

3. In a piston for an internal combustion engine, the combination of a piston head comprising a disc having an integral peripheral flange formed with ring grooves, two pairs of curved guide members oppositely disposed with relation to the axis of the piston and to-

364997—9
I 892

gether adapted to function as a cylinder-engaging guide, the curved members of each pair thereof being separated from the head flange and from each other by continuous air gaps, two webs integral with the piston head and connected to the adjacent guide members, and wrist pin bosses formed in these webs in which they are so positioned as to lie between the pairs of guide members as set forth.

[4.]* **1c** In a piston for an internal combustion engine, the combination of a piston head having a depending ring flange, two pairs of curved guide members oppositely disposed with relation to the axis of the piston, the curved members of each pair thereof being separated **Per A** from the [head]* **ring** flange and from each other [fol. 2036] by continuous air gaps, and webs carry- **Per G** ing wrist pin bosses, the said curved members, piston head and webs being united in an integral unitary structure.

[*Matter enclosed in brackets struck out in copy.]

5. In a piston for an internal combustion engine, the combination of a piston head comprising a head disc and a depending peripheral flange formed with ring
Per C grooves, and a guide formed integrally with the head and comprising two pairs of cylinder-engaging curved members oppositely disposed with relation to the axis of the piston and two webs each connected to the head and to one of the guide members of each of said pairs thereof, each pair of curved members being separated from the head flange and from each other by continuous air gaps, and wrist pin bosses formed in the webs in which they are so positioned as to lie between the pairs of guide members as set forth, the said guide structure being adapted to permit the curved members of each pair to approach each other under the reaction forces of the cylinder when the piston is heated.

[6.]* **2c** In a piston for an internal combus-
Per H tion engine, the combination of a piston head comprising a head disc and a depending peripheral flange formed with ring grooves, curved guide mem-

364997—10
I 893

bers separated from the piston head by air gaps, webs in which wrist pin bosses are formed, the curved members, piston head and webs being integrally united and formed in such a manner that the said members on either side of the said bosses may approach each other as the piston expands to maintain substantially constant the diameter of the said curved members when taken together.

---

7. In a piston for an internal combustion engine, the combination with a piston head comprising a disc and a depending peripheral flange formed with ring
Per C grooves, of a guide structure operably connected to the head and comprising two pairs of cylinder-engaging curved parts and two webs each connected to one curved member of each pair and formed with a wrist pin aperture, each pair of curved guide parts being separated from the head flange and from each other by continuous

---

[*Matter enclosed in brackets struck out in copy.]

air gaps and the guide structure being adapted to permit [fol. 2037] the curved guide members of each pair to approach each other under the reaction forces of the cylinder when the piston is heated.

Insert A[1]

364997—11
I 894

In Testimony Whereof, I hereunto affix my signature.

Frank Jardine.

OATH

County of Cuyahoga,
State of Ohio, ss.

Frank Jardine, the above named petitioner, being duly sworn, deposes and says he is a citizen of the United States and a resident of Cleveland, in the County of Cuyahoga and State of Ohio; that he verily believes himself to be the original, first and sole inventor of the improvement in Pistons, described and claimed in the annexed specification; that he does not know and does not believe that the same was ever known or used before his invention or discovery thereof, or patented or described in any printed publication in any country before his invention or discovery thereof, or more than two years prior to this application, or in public use or on sale in the United States for more than two years prior to this application; that said invention has not been patented in any country foreign to the United States on an application filed by him or his legal representatives or assigns more than twelve months prior to this application; and that no application for patent on said improvement has been filed by him or his legal representatives or assigns in any country foreign to the United States.

Frank Jardine.

Sworn to and subscribed before me this 9th day of March, 1920.

Geo. B. Pitts,
Notary Public.

(Seal)

364997—12

[fol. 2038] (Mail Room Jun 19 1920 U. S. Patent Office)
(Docket Clerk Jun 19 1920)

#2
Doc

Frank Jardine,
Pistons,
Ser. No. 364,997,
Filed March 11, 1920.

Hon. Commissioner of Patents,
Washington, D. C.

Sir:

All Powers of Attorney previously granted in this application are hereby revoked.

I hereby appoint B. D. Watts, of [1900 Euclid Avenue,]* **307 Bangor Bldg.** Cleveland, Ohio, my attorney with full power of substitution and revocation, to prosecute this application, to make alterations and amendments therein, to receive the patent, and to transact all business in the Patent Office connected therewith.

Signed at Cleveland, in the County of Cuyahoga and State of Ohio, this 14th day of June, 1920.

FRANK JARDINE.

(U. S. I. R. Documentary Stamp, 25 Cents)
(Accepted Jun 22 1920 R. F. Whitehead
First Assistant Commissioner.)

364997—13

2—069

146
EEG

#3

Address only
The Commissioner of Patents
Washington, D. C.

DEPARTMENT OF THE INTERIOR
UNITED STATES PATENT OFFICE

Washington, D. C., June 23, 1920.

You are hereby informed that YOUR POWER OF ATTORNEY [REVOKED]*
HAS BEEN ACCEPTED in the matter of the application of

[*Matter enclosed in brackets struck out in copy.]

[fol. 2039] Frank Jardine for Letters Patent for an Improvement in Pistons, No. 364,997, Filed March 11, 1920.

Very respectfully,

JAMES T. NEWTON,
Commissioner.

B. D. WATTS,
307 Bangor Bldg.,
Cleveland, Ohio.

364997—14

2—369

145
EEG

Address only
The Commissioner of Patents
Washington, D. C.

DEPARTMENT OF THE INTERIOR

UNITED STATES PATENT OFFICE

Washington, D. C., June 23, 1920.

You are hereby informed that YOUR POWER OF ATTORNEY REVOKED / HAS BEEN [ACCEPTED]* } in the matter of the application of Frank Jardine for Letters Patent for an IMPROVEMENT IN Pistons, No. 364,997, Filed March 11, 1920.

Very respectfully,

JAMES T. NEWTON,
Commissioner.

RAY STEWART GEHR,
Euclid Bldg.,
Cleveland, Ohio.

364997—15

[*Matter enclosed in brackets struck out in copy.]

[fol. 2040] (Mail Room Jul 12 1920 U. S. Patent Office)

Division 12, **Paper No. 4**
Jul 13 1920
U. S. Patent Office

BLYTHE D. WATTS
Solicitor of Patents
[1900 Euclid Ave.]*
Cleveland, Ohio
451 Lennox Bldg.,

July 9th, 1920.

In Re Application of
Frank Jardine,
Pistons,
Serial No. 364,997,
Filed March 11, 1920

Hon. Commissioner of Patents,
Washington,
D. C.

Dear Sir:—

In the above identified application, kindly note that my address has been changed from,

Room 307 Bangor Bldg., 942 Prospect Ave.,
Cleveland, Ohio

to

Room 451 Lennox Bldg., East 9th & Euclid Ave.,
Cleveland, Ohio

Yours very truly,

BDW
kmc

B. D. WATTS,

364997—16

[*Matter enclosed in brackets struck out in copy.]

[fol. 2041] (Patent Office Sep 8-1920 Mailed)

2—181

Div. 12
Ch:I

Serial No. 364,997

Address only
The Commissioner of Patents,
Washington, D. C.

DEPARTMENT OF THE INTERIOR

UNITED STATES PATENT OFFICE

Washington, Sept. 8, 1920.

Frank Jardine,

Sir: Your Application for a patent for an Improvement in Pistons filed Mar. 1, 1920, has been examined and Allowed.

The final fee, Twenty Dollars, must be paid not later than Six Months from the date of this present notice of allowance. If the final fee be not paid within that period, the patent on this application will be withheld, unless renewed with an additional fee of $15, under the provisions of Section 4897, Revised Statutes.

The office delivers patents upon the day of their date, and on which their term begins to run. The printing, photolithographing, and engrossing of the several patent parts, preparatory to final signing and sealing, will require about four weeks, and such work will not be undertaken until after payment of the necessary fee.

When you send the final fee you will also send, Distinctly and Plainly Written, the name of the Inventor, Title of Invention, and Serial Number as Above Given, Date of Allowance (which is the date of this circular), Date of Filing, and, if assigned, the Names of the Assignees.

If you desire to have the patent issue to Assignees, an assignment containing a Request to that effect, together with the Fee for recording the same, must be filed in this office on or before the date of payment of final fee.

After issue of the patent uncertified copies of the drawings and specifications may be purchased at the price of

[Five]* **Ten** Cents Each. The money should accompany the order. Postage stamps will not be received.
[fol. 2042] Final fees will Not be received from other than the applicant, his assignee or attorney, or a party in interest as shown by the records of the Patent Office.

Respectfully,

[JAMES T. NEWTON,]*
R. F. Whitehead.
Commissioner of Patents.

B. D. WATTS,
451 Lennox Bldg., East 9th & Euclid Ave.,
Cleveland, Ohio.

☞ In Remitting the Final Fee Give the Serial Number at the Head of This Notice.
☞ Uncertified Checks Will Not Be Accepted.

364997—17

(**$15** Rec'd Mar 8 1921 C. C. U. S. Pat. Office **26**)
(Application Div. Mar 9 1921 U. S. Patent Office)

Renewal

Division 12, **Paper No. 5**
Mar 16 1921
U. S. Patent Office.

RENEWAL PETITION

To the Commissioner of Patents:

Your petitioner, Frank Jardine, a citizen of the United States, and a resident of Cleveland, in the County of Cuyahoga, and State of Ohio, whose post-office address is Care of the Aluminum Castings Company, Cleveland, Ohio, represents that on the 11th day of March 1920, he filed an application for Letters Patent for an improvement in Pistons, Serial No. 364,997 which application was allowed September 8th 1920, but that he failed to make payment of the final fee within the time allowed by law. He now makes

[*Matter enclosed in brackets struck out in copy.]

renewed application for Letters Patent for said invention, and prays that the original specification, oath and drawings, may be used as a part of this application.

[fol. 2043] Signed at Cleveland, in the County of Cuyahoga and State of Ohio, this 7 day of March 1921.

FRANK JARDINE,
By B. D. WATTS,
His Attorney.

Pet. redated Mar. 9, 1921 as case had not forfeited on date petition was rec'd Mar. 8/21.

Appl'n Div. P
364997—18

(Mail Room Mar 8 1921 U. S. Patent Office)

Division 12, **Paper No. 6**
Mar 16 1921
U. S. Patent Office.
A

In Re Application of
Frank Jardine,
PISTONS
Serial No. 364,997
Filed March 11th 1920
Allowed September 8th 1920
Renewed

Hon. Commissioner of Patents,
Washington,
D. C.
A

Sir:

Applicant amends the above identified application as follows:

Page 3, line 25 cancel "5" and insert, —*4*—.

Page 3, next to last line, change "Fig. 3", to —*Figs. 1 and 4*—.

Claim 4, line 5 cancel "head" and insert —*ring*—.

Enter the following claims as claims, 8, 9, 10 and 11.

8. —In a piston for an internal combustion
Sub B′ engine, the combination of a substantially cylin-
A′ drical piston head having grooves therein, piston rings in said grooves, a skirt for said piston head connected to the same, piston pin bosses in said piston, the portions of the skirt adjacent the outer ends of the bosses, being relieved all along the length of the skirt, said piston [fol. 2044] being provided with horizontal slots adjacent the junction of the head and the skirt and

364997—19

with a vertical, or substantially vertical, slot extending thruout, or substantially thruout, the length of the skirt.

9. —In a piston for an internal combustion engine, the combination of a substantially cylindrical piston head having grooves therein, piston rings in said grooves, a skirt for said piston head connected to the same, piston pin bosses in said piston, the portions of the skirt adja-
6 cent the outer ends of the bosses being relieve[s]*d all along the length of the skirt, said piston being provided with a vertical, or substantially vertical,
8 slot e[c]*xtending, from near the junction of the skirt with the head, thruout, or substantially thruout, the length of the skirt to or near the lower end of the skirt.

10. —In a piston for an internal combustion engine, the combination of a substantially cylindrical piston head having grooves therein, piston rings in said grooves, a skirt for said piston head connected to the same, piston pin bosses in said piston, the portions of the skirt adjacent the outer ends of the bosses being relieved all along the length of the skirt, said piston head being provided with circumferential slots adjacent the junction of the head and the skirt, and with a vertical, or substantially vertical, slot, substantially midway between the ends of the piston pin bosses joining one of the horizontal slots at one end and extending thruout, or substantially thruout, the length of the skirt to or near the lower end of the skirt.

11. —In a piston for an internal combustion en-
2 gine, the co[n]*mbination of a substantially cylindrical piston head having grooves therein, piston rings in said grooves, a skirt for said piston head connected

[* Matter enclosed in brackets, struck out in copy.]

to the same, piston pin bosses in said piston, portions of the skirt adjacent the outer ends of the bosses being relieve[s]*d, said piston being provided with cir-

364997—20

cumferential slots adjacent the junction of the head and the skirt, and with a vertical, or substantially vertical, slot substantially midway between the ends of the piston pin bosses, adjoining one of the horizontal slots at one end and extending thruout, or substantially thruout, the length of the skirt to or near the lower end of the skirt.

[fol. 2045] It is believed that the new claims herewith presented are clearly allowable and early and favorable action is solicited.

Respectfully submitted,

FRANK JARDINE,

By B. D. WATTS,

His Attorney.

—3— 364997—21

SUPPLEMENTAL OATH

STATE OF OHIO,
CUYAHOGA COUNTY, SS.

Frank Jardine, whose application for Letters Patent for an improvement in PISTONS, serial No. 364,997, was filed in the United States Patent Office on or about March 11th 1920, being duly sworn deposes and says that the subject matter of the foregoing amendment attached hereto and containing new claims 8, 9, 10, 11, [12]* was part of his invention, was invented before he filed his original application above identified for such invention, was not known or used before his invention, was not patented or described in a printed publication in any country more than two years before his application, was not patented in a foreign country on an application filed by himself or his legal representatives or assigns more than twelve months before his application, was not in publi[s]*c use or on sale

[*Matter enclosed in brackets struck out in copy.]

in this country for more than two years before the date of his application, and has not been abandoned.

FRANK JARDINE.

Sworn to before me and signed in my presence this 25th day of Feb. 1921.

MERLE B. PRICE,
Notary Public.

364997—22

[fol. 2046] (Patent Office Apr 9 1921 Mailed)
2—260

Div. 12 Room 322 **Paper No. 7**

Address only
"The Commissioner of Patents,
Washington, D. C.,"
and not any official by name.
Ch-D

All communications respecting this application should give the serial number, date of filing, title of invention, and name of the applicant.

DEPARTMENT OF THE INTERIOR
UNITED STATES PATENT OFFICE

Washington Apr. 9, 1921.

B. D. Watts,
451 Lennox Bldg.,
East 9th St. & Euclid Ave.,
Cleveland, Ohio.

Please find below a communication from the Examiner in charge of the application of Frank Jardine, Filed Mar. 9, 1921, Serial No. 450,898 PISTONS.

THOMAS E. ROBERTSON,
Commissioner of Patents.

Responsive to amendment of Mar. 8, 1921.

Claim 9, line 6 "relieves" should be *relieved.* Line 8 "ectending" should be *extending.*

Claim 11, line 2 "combination" is misspelled. Line 6 "relieves" should be *relieved.*

Claims 8 to 11 inclusive are rejected as defining structure unwarranted by the specification and drawing. The slot 12 is described in the specification and shown on the drawing as being spiral or diagonal. It would therefore be inconsistent to claim a "vertical" slot. Applicant is also unwarranted in claiming horizontal slots extending *"substantially thruout"* the length of the skirt when he only shows a slot extending *thruout.*

The expressions "throughout, or substantially throughout," "vertical or substantially vertical" and "the length [fol. 2047] of the skirt to or near the lower end—" are objectionable as being alternative.

The remaining claims stand allowed.

P. P. PIERCE,
Examiner.

V.I.C.

364997—23

I 895

(Mail Room Jan 29 1922 U. S. Patent Office)
Division 12, **Paper No. 8**
Jan 24 1922
U. S. Patent Office
12

B Sup. Oath

In Re Application of
Frank Jardine,
PISTONS
Serial No. 364,997 **Renewal No. 450,898**
Filed March 11th, 1920.
Allowed September 8th, 1920.
Renewed.

Cleveland, Ohio.
January 20, 1922.

Hon. Commissioner of Patents,
Washington,
D. C.

Sir:—

B

Applicant amends the above identified application as follows:—

Page 1, line six from the bottom, cancel "slipper type".

Page 2, line 3, cancel "slipper type".

Page 2, lines 9 and 10, cancel "is of the so-called slipper type and". Page 2, line 11, between "guide" and "portion" insert *or skirt*.

Change "slipper" to *guide* in the following places:—

Page 2, line 22; page 3, line 21; page 3, line 24; page 3, line 25; page 3, last line.

Page 2, last line, change "slipper" to *portion*.

Page 3, line 4, change "slipper" to *portion 10a*. Page 3, line 5, change "slipper" to *portion 10*. Page 3, line 5, from the bottom, change "slippers" to *guide portions*.

[fol. 2048] Page 5, line 11, change "slippers" to *portions*.

Cancel claims 8 to 11 inclusive and substitute the following:—

[3c. 8.]* **1.** In a piston for an internal combustion
B[1] engine, the combination of a head having ring grooves therein, a plurality of webs integral with said head and having diametrically opposite piston pin bosses therein, a skirt integral with said webs relieved adjacent said webs and separated from the head by cir-

cumferential slots and provided with a longitudinal slot connecting the lower end of the piston with one of the circumferential slots. **(over)**

[9.]* **4c** In a piston for an internal combustion engine
the combination of a head having ring grooves therein, a
plurality of cordal webs integral with said head
Per H and having diametrically opposite piston pin bosses
therein, a skirt integral with said webs, relieved
adjacent said webs and separated from the head by cir-
cumferential slots and provided with a longi-
Per G tudinal slot [connecting]* **lying on a line extending from** the lower end of the piston [with]* **to** one of
the circumferential slots.

[10.] **5c** In a piston for an internal combustion engine,
the combination of a head having ring grooves therein,
a plurality of webs integral with the head and extending
downwardly therefrom, diametrically opposite piston pin

[*Matter enclosed in brackets struck out in copy.]

bosses in said webs, a skirt for said piston, relieved
Per G. adjacent said webs **to expose said bosses,** with circumferential slots between said head and skirt,
" G and having a longitudinal slot **lying on a line extending from** connecting the lower end of the skirt with one of the slots.

---

11. In a piston for an internal combustion engine the combination of a head having ring grooves therein, a plurality of webs connected to the piston head and ex-
Per C tending downward therefrom, diametrically oppositely disposed wrist pin bosses, one in each of said webs, a skirt for said piston connected to the side edges of the webs and relieved adjacent the webs to expose the webs and the bosses, said piston provided with circumferen-
[fol. 2049] tial slots between the skirt and head and with a longitudinal slot extending from a circumferential slot to the open end of the skirt.

12. In a piston for an internal combustion engine, the combination of a head, a plurality of webs each connected integrally at one end with the head and projecting downwardly therefrom, and piston pin bosses in each web, a skirt for said piston connected integrally with the

364997—25
I 897

side edges of the webs and relieved adjacent the webs to expose the webs and the bosses, said piston provided with circumferential slots between the piston head and the piston skirt portion, and with a longitudinal slot extending from the open end of the skirt to one of the circumferential slots.

[6c 13.]* 2. In a piston for an internal combustion engine the combination of a head comprising a head disc and a peripheral flange having ring grooves
Per I therein, a pair of chordal webs, substantially rectangular in shape and located opposite each other in the piston, connected integrally at their upper edges to the peripheral flange of the piston, diametrically opposite wrist pin bosses, one in each of said webs, a skirt for said piston integrally connected to each of the side edges of the webs and cut away so as to expose each of the rectangular webs and the piston pin bosses from the outside of the pis-

---

[*Matter enclosed in brackets struck out in copy.]

ton, said piston being provided with circumferential slots between the skirt and head and with a longitudinal slot extending from one of the circumferential slots to the open end of the piston. **(G'/Cls. 3-12)**

[14.]* **7c** In a piston for an internal combustion engine, the combination of a head provided with **having** ring grooves therein, a pair of webs integral with and dependent from said head and located opposite each other, diametrically oppositely disposed wrist pin bosses, one in each of said webs, a skirt for said piston, integrally connected to each of the side edges of the webs, said piston being provided with circumferential slots between the skirt and head and with a longitudinal slot extending from one of the circumferential slots to the open end of the piston.

Per H

[15.]* **8c** In a piston for an internal combustion engine, the combination of a head and a pair of cordal webs sub- [fol. 2050] stantially rectangular in shape, located opposite each other in the piston and connected integrally at their upper edges to the piston head, diametrically oppositely disposed wrist pin bosses, one in each of said webs, and

364997—26
I 898

a skirt for said piston integrally connected to each of the side edges of the webs, said piston being provided with circumferential slots between the skirt and head and with a longitudinal slot extending from one of the circumferential slots to the open end of the piston.

[16.]* **9c** In a piston for an internal combustion engine, the combination of a head, webs integrally connected to said head and dependent therefrom, oppositely disposed piston pin bosses mounted one in each of said webs and integral therewith, a skirt for said piston integrally connected to each of said webs and extending beyond the same, said piston provided with circumferential slots between the head and skirt and with a longitudinal slot connecting one of said circumferential slots and the open end of the skirt of the piston.

10c [17.]* In a piston for an internal combustion engine the combination of a head having ring grooves therein, a plurality of cordal webs integrally connected with the

[*Matter enclosed in brackets struck out in copy.]

piston head and extending downwardly therefrom, oppositely disposed piston pin bosses, integral with said webs and mounted therein, a skirt for said piston longer than said webs and interconnected at the side edges of the webs to each of said webs, said piston being provided with circumferential slots between the head and skirt and with a longitudinal slot connecting one of said circumferential slots with the open end of the skirt.

Insert
[D]* **G**

REMARKS.

I 899

Rather than amend the claims applicant has cancelled claims 8 to 11 inclusive and rewritten the same. Applicant does not agree that the expressions are alternative and does not abandon any of the matter originally claimed in claims 8 to 11 but intends that the new claims shall cover the piston [fol. 2051] illustrated in the drawings and all of the mechanical equivalents thereof. A supplemental oath is filed herewith.

Respectfully submitted,
B. D. Watts,
Attorney for Applicant.

Jan. 20, 1922.

(Mail Room U. S. Patent Office Jan. 1922)

SUPPLEMENTAL OATH

State of Ohio }
Cuyahoga County } ss.

Frank Jardine, whose application for Letters Patent for an improvement in Pistons, serial No. 364,997, was filed in the United States Patent Office on or about March 11th, 1920, being duly sworn deposes and says that the subject matter of the foregoing amendment attached hereto and containing new claims 8, 9, 10, 11, 12, 13, 14, 15, 16, 17, was

[*Matter enclosed in brackets struck out in copy.]

part of his invention, was invented before he filed his original application above identified for such invention, was not known or used before his invention, was not patented or described in a printed publication in any country more than two years before his application, was not patented in a foreign country on an application filed by himself or his legal representatives or assigns more than twelve months before his application, was not in public use or on sale in this country for more than two years before the date of his application, and has not been abandoned.

FRANK JARDINE.

Sworn to before me and signed in my presence this 16th day of January, 1922.

MERLE B. PRICE,
Notary Public.

(Notarial Seal)

364997—29

[fol. 2052] (Mailed Patent Office Jan. 30 1922)
2—260

Div. 12 Room 322 **Paper No. 9**

Address only
"The Commissioner of Patents,
Washington, D. C.,"
and not any official by name.
Ch-D

All communications respecting this application should give the serial number, date of filing, title of invention, and name of the applicant.

DEPARTMENT OF THE INTERIOR
UNITED STATES PATENT OFFICE
Washington, Jan. 30, 1922

B. D. Watts,
451 Lennox Bldg.,
East 9th & Euclid Ave.,
Cleveland, Ohio.

Please find below a communication from the EXAMINER in charge of the application of Frank Jardine, Filed Mar. 9, 1921, Serial No. 450,898, PISTONS.

THOMAS E. ROBERTSON,
Commissioner of Patents.

Responsive to the amendment of Jan. 23, 1922.

Claims 1, 2 and 3 are rejected as being unpatentable over Claim 4 in view of

Ricardo, 1,294,833, Feb. 18, 1919 (74-108)

Claims 5, 6 and 7 are rejected as being substantially duplicates of each other. Applicant may select either one of these claims that he desires.

Claims 9 to 17 inclusive are rejected as being unpatentable over claim 8 in view of Ricardo, supra. Applicant's alleged invention involves merely the slitting of the curved guide members or slippers shown by Ricardo. Inasmuch as this feature appears to be the only patentable novelty over the reference, the claims in this case are unnecessarily multiplied and applicant is required to cut the number of [fol. 2053] claims down in proportion to the patentable subject matter contained in the case. See in re Duncan 276 O. G. 211.

Claims 4 and 8 appear allowable.

P. P. PIERCE,
Examiner.

V. I. C.

364997—30

(Mail Room U. S. Patent Office Feb 6 1922)

Division 12, **Paper No. 10**
Feb 7 1922
U. S. Patent Office.

IN THE UNITED STATES PATENT OFFICE

Applicant : Frank Jardine.
Invention : Pistons.
Serial No. : 450,898.
Filed : Renewal.

Div. 12, Ch. 1.
Room 322.

Cleveland, Ohio.
February 2nd, 1922.

Hon. Commissioner of Patents,
Washington, D. C.

C Sir:—

Responsive to Office Action dated January 30th, 1922. Cancel claims 1, 2, 3, 5, 7, 11, and 12, and renumber the remaining claims consecutively.

REMARKS

Applicant has materially reduced the number of claims in the case, and asks that the remaining claims be allowed. These cancellations bring the case well within the practice in this art, as indicated by the patents to Mooers, 1,402,309, Jan. 3, 1922, and Turner, 1,312,879, and 1,312,880, Aug. 12, 1919.

On reconsideration, applicant believes the Examiner will agree that the claims recite combinations of elements, and are not, as the Examiner suggests, merely the piston of the Ricardo patent with the addition of a slot. This follows from the fact that the addition of the slot changes the structure and the resistance to, and the disposal of, the forces within and without the piston when the piston is in use. [fol. 2054] Pressures operating on the piston, will operate in different directions and must be met and handled in such a way as to realize the advantages sought for.

364997—31

The Ricardo piston has not been generally adopted commercially, while the claimed pistons are in quite general and successful commercial use. Consequently, the various parts operate in a different manner from the Ricardo piston.

We have carefully considered the decisions of ex parte Duncan and in re Duncan. Duncan's case was an extraordinary one, requiring drastic handling, we are satisfied that neither the Commissioner nor Judge Van Orsvel intended to depart from the well established rule set up in the following cases:

In *Dick v. Underwood,* 246 F. R., 309, Judge Hazel said, at p. 313:—

> "Criticism is made upon the multiplication of claims; but, as they all relate to the same subject-matter and are both broad and specific, they were undoubtedly differently phrased to protect the patentee against any possible prior inventions, an expedient that does not invalidate them. *Parke & Davis & Co. v. H. K. Mulford Co.* (C. C.) 189 Fed. 95, affirmed 196 Fed. 496, 116 C. C. A. 262."

In *Parke v. Mulford,* 189 F. R., 95, Judge Hand said, at p. 102 and 103:—

> "The first of the technical objections is because of the vague character of the claims of the patent and

their fraudulent reduplication. I can see no basis whatever for this contention. As I have already said, the claims were not for the active principle, nor for the product of the process. Of course claims for a product not defined as the product of a process must contain in themselves adequate differentia, or they will not be good (*Cochrane v. Baddische Anilin Fabrik,* 111 U. S. 293, 310, 4 Sup. Ct. 455, 28 L. Ed. 433); *but the only valid objection to multiplication of claims is when it appears that the patentee is trying deceitfully to go beyond the fair scope of his invention.* I can see no evidence of that here, and the fact that I have sustained the broader claim is a complete answer to such a position. That Takamine in a number of instances should have added other claims more circumscribed in their scope was natural enough, and *what every prudent* [fol. 2055] *solicitor ought to do.* No one can in advance know how far anticipations will go or how little in the end his patent will cover. There is nothing improper, so far as I can see, in first putting your claims as broadly as in good faith you can, and then, *ex abundanti cautela,* following them successively with narrower claims designed to protect you against possible anticipations of which you are not yet aware. Indeed, the very case upon which the defendant relies (*Matheson v. Campbell,* 78 Fed. 910, 917, 24 C. C. A. 384) shows the necessity of claims as broad as one can honestly support. If

any one of the specified differentia of the claim is missing, the defendant's product does not infringe; if any anticipation includes all the differentia, the claim is bad. To pass between this Scylla and the Charybdis, I think a patentee may fairly be entitled to bend sails upon many yards." (Italicizing ours.)

Indeed, the decision of ex parte *Halverson,* 283 O. G. 182, is a warning that ex parte *Duncan* is not to change the well established practice which has been followed in the Federal cases we have cited.

In addition to the reasoning of the courts in the cited

cases, we might add that we have found no record of any patent which has been held invalid because of the multiplicity of claims, though many patents have been assailed on that ground. On the contrary, the number of patents which have failed because of too few claims is legion. The equity spirit, which should prevail in adjudicating the claims on meritorious inventions, dictates that the doubt be resolved in favor of allowing the claims, and not by restricting them, endanger the protection on the invention.

If we were to limit ourselves to claim 8 alone of the group including 8 to 17, and prior art, not now developed, was found to anticipate this claim, that feature of the invention would be defeated, and the inventor would be without protection thereon. Such prior art might not, however, as frequently happens, anticipate the narrower claims such as 9 to 17 inclusive.

It has been our observation that settled doctrines of law, like that established by the Federal authorities which we have cited, are often disturbed by some extraordinary case or some extraordinary view of some particular court, and that much harm is done by an effort to follow the extraordinary case or the extraordinary view, and that ultimately [fol. 2056] the law goes back into the established channel. It would be regrettable, if the very useful invention here under consideration, were in any way impaired

by departing from the established law as set forth in the Federal decisions which we have cited.

As a matter of precaution, we say that the cancellation of claims made in this amendment, has not been made with the purpose of abandoning the subject matter thereof, but, merely to meet the Examiner's requirement with regard to the number of claims, and because the remaining claims cover the substance of those cancelled.

An allowance is requested.

Respectfully,

B. D. WATTS.
Attorney for Applicant.

BDW: F

364997—34

(Patent Office May 6-1922 Mailed)

2—260

Div. 12 Room 322 **Paper No. 11**

Address only
"The Commissioner of Patents,
Washington, D. C.,"
and not any official by name.

All communications respecting this application should give the serial number, date of filing, title of invention, and name of the applicant.

Ch-D

DEPARTMENT OF THE INTERIOR

UNITED STATES PATENT OFFICE

Washington May 6, 1922

B. D. Watts,
451 Lennox Bldg.,
East 9th & Euclid Ave.,
Cleveland, Ohio.

Please find below a communication from the EXAMINER in charge of the application of Frank Jardine, Filed Mar. 9, 1921, Serial No. 450,898, PISTONS.

THOMAS E. ROBERTSON,
Commissioner of Patents.

[fol. 2057] Responsive to the amendment of Feb 6, 1922.

Claim 4, 5, 7, 8, 9 and 10 are rejected as being unpatentable over claim 3 in view of Ricardo, of record. The remarks submitted by applicant on Feb. 6, 1922 and the decisions therein cited have been carefully noted but it is not thought that they are in point with the question at issue. The Examiner does not contend that a patent would be rendered invalid by reason of the fact that the claims therein have been unduly multiplied or even that they were duplicates of each other. It is thought that applicant should point out the patentable difference between the several claims. At the present time the Examiner is unable

to discover any such patentable difference between the same.

The remaining claims are allowed.

P. P. PIERCE,
Examiner.

V. I. C.

364997—35

(Application Room Jun 15 1922 U. S. Patent Office)

Division 12, **Paper No. 12**
Jun 16 1922
U. S. Patent Office

IN THE UNITED STATES PATENT OFFICE

In the application of
Frank Jardine,
For Pistons
Serial No. 450,898,
Filed March 9, 1921.

Cleveland, Ohio, [May]* **June 14** 1922.

Hon. Commissioner of Patents,
Washington, D. C.

Sir:

Applicant responds as follows to the official action dated May 6, 1922.

It is noted that claims 1, 2, 3 and 6 have been allowed, but that claims 4, 5, 7, 8, 9 and 10 are rejected as unpatentable over allowed claim 3 in view of Ricardo.

It is further noted that the examiner thinks the claims should be patentably different and that such difference between the various claims should be pointed out.

Applicant believes that it is not the rule to require that the various claims in a case should be patentably different [fol. 2058] from each other in the sense that claims in different applications are required to be distinguished. Where the claims in one application must set forth a structure patentable over structure allowable in another case, the claims in a single application need not be so clearly distinguished. If another rule is followed it would be impos-

---

[*Matter enclosed in brackets struck out in copy.]

sible to obtain broad and narrow claims of the same structure in a single application, as this has been repeatedly held to be not only permissible but essential in proper soliciting of patents. (See two cases cited in applicants amendment dated February 6, 1922 in this application.)

—1— 364997—36

Although it has been held by the courts that every claim of a patent is to be considered as setting forth a complete and independent invention, this practice has not been followed to the extent which the language might lead one to expect, since it has been repeatedly held that if two or more claims appear to be alike they will, if practicable, be held to differ rather than to agree. (See Walker on patents 5th Addition page 226, paragraph 177.)

This practice was followed in each of the cases quoted from in applicant's last action where broad and narrow claims which differ in phrasing were held to be valid.

Furthermore, applicants contention that claims in an application need not differentiate patentably over each other is sustained by the case of *Wm. B. Scaife & Sons Co. v. Falls City Woolen Mills.* (Circuit Court of Appeals, 209 F. R. 210, November 4, 1913.) The pertinent part of this Circuit Court decision is as follows, the italics being ours.

> This patent is one having a series of twelve claims. It is sometimes said that in such case each claim should be considered as a separate patent. This statement, accurate enough for some purposes, is misleading, if followed too far; but we must at least say that, usually, proper construction and effect can be given to each claim only by differentiating it from the other claims. *Each claim should be capable of such differentiation else it has no right to exist*; and the difficulty often found in doing so, caused by repetition and confusion, does not effect the propriety of this rule of construction in a normal case where it can be clearly applied. *Each claim should be directed at some function, step,* [fol. 2059] *or advantage to give it individuality; it should have a characterizing thought of point by which it can be identified;* and, of the court which is to construe the claim can find this dominant thought, its task will be simplified.

Assuming the rule to be as set forth by applicant, the distinctions between the various claims will now be pointed out. Claims 4, 8 and 10 belong to the same general group, involving chordal webs differently defined in the various claims, each claim being distinguished from claim 3 by limitations to the specific kind of webs, namely, chordal webs as contrasted with other types of webs

which was described by the broader wording of claim 3. Similarly claims 5, 7 and 9 belong to a single group where each of the claims is distinguished from the others by certain limitations. For example, claim 5 sets forth a skirt relieved adjacent the webs, claim 7 sets forth a pair of webs with a skirt connected to the side edges of the webs, and claim 9 sets forth the skirt extending beyond the webs. In addition to being thus different from one another the claims are distinguished from claim 3 among other things in these particulars above mentioned.

It has been our personal experience that patents are often held invalid because of having too few claims, but that multiplicity of claims has never been the cause of a patent being held invalid. If a court should decide there are too many claims it may declare certain ones thereof invalid without invalidating the whole patent. Furthermore, if a patent is granted with a limited number of claims it may and in fact often does happen that a meritorious invention is lost to the inventor through non-infringement of anyone of the claims granted, whereas if additional claims stating the invention is slightly different terms, has been issued by the competing structure would have been technically, as it was actually, an infringement. By insisting on the claims in this case applicants attorney is inspired [in]* by the belief that both the examiner and himself are working to the common end of issuing patents covering the invention in a manner to assure to the inventor the full benefit of his invention.

The accomplishing of anything less than this injustly deprives the inventor of what was rightfully his and reflects on the workmanship of both the attorney and examiner.

[* Matter enclosed in brackets, struck out in copy.]

[fol. 2060] It is believed that the claims now in the case are allowable, and for the many reasons heretofore cited

should be granted. An early allowance is earnestly requested.

Respectfully submitted,
B. D. WATTS.
364997—39

(Mail Room Jul 21 1922 U. S. Patent Office)

Division 12, **Paper No. 13**
Jul 22 1922
U. S. Patent Office

IN THE UNITED STATES PATENT OFFICE

In the application of
Frank Jardine,
For PISTONS,
Serial No. 450,898
Filed March 9, 1921.

Cleveland, Ohio, July 19, 1922.

Hon. Commissioner of Patents,
D Washington, D. C.

Sir:

Enter the following claim as claim 11.

11. In a piston for an internal combustion engine, the combination of a piston head having a depending ring flange, two pairs of curved guide members oppositely disposed with relation to the axis of the piston, the curved members of each pair thereof being separated
D¹ from the ring flange and from each other by con-
Per G tinuous air gaps, wrist pin bosses and webs connecting the wrist pin bosses with certain of said guide members, said guide members piston head and webs being united in an integral [illegible] tary structure.

Insert
E[1]

[fol. 2061] REMARKS.

Claim 11 presented herewith resembles allowed claim 1, closely, and it is believed to be allowable. An early allowance is requested.

Respectfully,

B. D. WATTS.
364997—40

(Patent Office Oct 5 1922 Mailed)

2—260

Div. 12 Room 322 **Paper No. 14**

Address only
"The Commissioner of Patents,
Washington, D. C.,"
and not any official by name.

All communications respecting this application should give the serial number, date of filing, title of invention, and name of the applicant.

Ch-D

DEPARTMENT OF THE INTERIOR
UNITED STATES PATENT OFFICE
Washington Oct. 5, 1922

B. D. Watts,
451 Lennox Bldg.,
East 9th St. & Euclid Ave.,
Cleveland, Ohio.

Please find below a communication from the Examiner in charge of the application of Frank Jardine, Filed Mar. 9, 1921, Serial No. 450,898, PISTONS.

THOMAS E. ROBERTSON,
Commissioner of Patents.

Amended July 21, 1922.

Claims 1, 2, 3, 6 and 11 are allowed.

Claims 4, 5, 7, 8, 9 and 10 are again rejected upon the references and for the reasons given in the last office action.

Referring to applicant's remarks submitted June 15, 1922, it is thought that the arguments and authorities

[fol. 2062] therein set forth are not in point with the issue now being discussed relative to the case at bar. The Examiner has never contended that the various claims in a case should be patentably different from each other in the sense that claims in different applications are required to be different. But, the Examiner does maintain, that where a claim clearly and completely sets forth the applicant's contribution to the art to which his invention appertains, no good reason is seen, and none has been advanced for allowing a large number of claims, which not only do not include anything new and patentable in addition to the novel feature, already covered, but do not even describe the novel and patentable feature itself in slightly different terms. In the present case applicant is attempting to add old and unpatentable features to his invention for which he has already been

granted protection by the allowed claims.

If the rejected claims are allowable they are so not because they include "cordal webs" (as against "webs" set forth in claim 3), or because the "webs" extend downwardly from the head, (whereas claim 3 only states that the webs are "integral with the head") or because the skirt is "integrally connected to each of the side edges of the webs," or because the "webs are substantially rectangular in shape" or because the "skirt extends beyond the webs."

Not any of the above structural limitations, taken singly or in the aggregate, which characterize the chief difference between the allowed and rejected claims, are patentable over Ricardo, of record. For, it is to be noted that Ricardo shows a piston whose head and skirt are separated from each other by circumferential slots, a plurality or a pair of cordal webs integrally with and extending downwardly from the head, said webs being in parallel relation to each other, and having opposed wrist pin bosses, said webs being rectangular in shape and having joined thereto at their side edges the skirt of the piston which skirt extends below the said webs. Applicant's only contribution to the art, as developed by Ricardo, is the splitting of the guide sections or slippers. For this he has ample protection in the allowed claims.

As heretofore stated, it is thought to be well settled in

the law that a claim to be properly allowable must define something novel and patentable over what forms the basis [fol. 2063] for patentability in the allowed claims. To do otherwise would be to invite controversy and litigation.

The foregoing considerations dispose of the issue in the case and as the Examiner is firmly of the opinion that the rejection of May 6, 1922 was proper, the same

364997—42

450,899—3

is made final from which applicant may appeal to the board of Examiners-in-Chief if he so desires.

P. P. PIERCE,
Examiner, Div. 12.

V. I. C.

364997—43

(Patent Office Apr 5-1923 Mailed)

2—260

Div. 12 Room 322 **Paper No. 15**

Address only
"The Commissioner of Patents,
Washington, D. C.,"
and not any official by name.

All communications respecting this application should give the serial number, date of filing, title of invention, and name of the applicant.

Ch-D

Copy sent applicant and assignee.

DEPARTMENT OF THE INTERIOR
UNITED STATES PATENT OFFICE

Washington, April 5, 1923.

B. D. Watts,
451 Lennox Bldg.,
East 9th & Euclid Ave.,
Cleveland, Ohio.

Please find below a communication from the Examiner in charge of the application of Frank Jardine, Filed Mar. 9, 1921, Serial No. 450,898 Pistons.

45—9–10–11

THOMAS E. ROBERTSON,
Commissioner of Patents.

[fol. 2064] The following claims are suggested to the applicant for the purpose of interference:

—A piston comprising a head, a skirt separated at its periphery from the head, and pin bosses connected to the head and to the upper and lower parts of the skirt, said skirt being split longitudinally at one side between its connections to said bosses.

A piston comprising a head portion, a skirt portion, two separated pin bosses, connecting flanges in the zone of the bosses and extending from the bosses to the skirt on both sides of the bosses, connecting means from each of the bosses to the head portion, the skirt portion being entirely separated from the head portion except through the boss connections, and the skirt portion being split longitudinally of the piston to permit free expansion and contraction.

A piston comprising a head portion, a skirt portion, two separated pin bosses, connecting flanges in the zone of the bosses and extending from the bosses to the skirt on both sides of the bosses, connecting means from each of the bosses to the head portion, the skirt portion being entirely separated from the head portion except through the boss connections, and the skirt portion being split longitudinally of the piston to permit free expansion and contraction and the skirt portion being cut away adjacent the outer ends of the piston bosses.

A piston for internal combustion engines comprising in combination a head portion having an end wall and a side wall, a guide portion having on one side a cylinder-engaging part disposed to take the angular thrust of a connecting rod during one stroke of the piston, said cylinder-engaging part being separated at its upper end from said side wall by an air gap and being split longitudinally to accommodate expansion incident to the heating of the piston, a pair of separated pin bosses, and walls integrally uniting said bosses, the guide portion and the head portion.

364997—44

450,898—2

A piston comprising a head and body, internal yielding ribs supporting the head and body, and means on said ribs

adapted to form engaging connection with operable parts for said piston.

A piston open at one end and having a packing ring supporting portion and a cylinder engaging portion, said cylinder engaging portion having a slot which is cut through [fol. 2065] the thickness of its peripheral wall and extending from the open end of the piston to said ring supporting portion, a pair of wrist pin bearings depended from said ring supporting portion separated from said cylinder engaging portion, and tying means extending from each of said wrist pin bearings each being co-operably connected at their opposite ends to said cylinder engaging portion.

A piston for internal combustion engines comprising a head having downwardly extending resilient arms carrying curved guide members, said head being of less diameter than the diameter of the guide members.

In a piston of the class described, a cup-like head comprising a pressure receiving end and a wall portion, a skirt circumferentially disconnected from the wall portion of the head and divided from end to end, and skirt carriers connecting said skirt to the pressure receiving end, said skirt carriers being disconnected from the wall portion of the head and susceptible of being slightly flexed radially.

A piston having a head with top and side walls in combination with a guide structure connected thereto and comprising diametrically opposite cylinder-engaging parts formed with air spaces between their upper edges and the bottom edge of the side wall of the head, wrist pin bosses between the cylinder-engaging parts, and means joining said bosses and cylinder-engaging parts together, the said joining means being resiliently yieldable and arranged not to engage the cylinder.

A piston having a head and a cross-head structure connected thereto and comprising diametrically opposite slippers, wrist pin bosses between the slippers and means joining said bosses and slippers together, the said joining means being resiliently yieldable.

A piston comprising a head, a skirt having resilient sections separated from said head by a slit extending continuously around the piston, and means for yieldingly connecting said skirt sections with said head.

Failure to make the above claims within thirty days from

the date of mailing of this letter will be taken as a disclaimer of the subject matter covered thereby.

R. M. WEAVER,
Acting Examiner, Div. 12.

V. I. C.

364997—45

[fol. 2066] (Mail Room May 3 1923 U. S. Patent Office)

Division 12, **Paper No. 16**
May 4 1923
U. S. Patent Office

DEPARTMENT OF THE INTERIOR
UNITED STATES PATENT OFFICE
Washington, D. C.

Applicant Frank Jardine
Invention Pistons
Serial No. 450,898
Filed March 9, 1921

E Cleveland, Ohio, April 30th, 1923.

Hon. Commissioner of Patents,
Washington, D. C.

Sir:—

In response to the Official Action dated April 5, 1923 in which certain claims were suggested to applicant for purpose of interference, applicant amends as follows:

Insert the following claims as Claims 11 to 21 inclusive.

E' [11.]* **12E** A piston comprising a head, a skirt separated at its periphery from the head, and pin bosses connected to the head and to the upper and lower parts of the skirt, said skirt being split longitudinally at one side between its connections to said bosses.

Per G [12.]* **13E** A piston comprising a head portion, a skirt portion, two separated pin bosses, connect-

[*Matter enclosed in brackets struck out in copy.]

ing flanges in the zone of the bosses and extending from the bosses to the skirt on both sides of the bosses, connecting means from each of the bosses to the head portion, the skirt portion being entirely separated from the head portion except through the boss connections, and the skirt portion being split longitudinally of the piston to permit free expansion and contraction.

—1— 364997—46

[13.]* **14E** A piston comprising a head portion, a skirt portion, two separated pin bosses, connecting flanges in the zone of the bosses and extending from the bosses to [fol. 2067] the skirt on both sides of the bosses, connecting means from each of the bosses to the head portion, the skirt portion being entirely separated from the head portion except through the boss connections, and the skirt portion being split longitudinally of the piston to permit free expansion and contraction and the skirt portion being cut away adjacent the outer ends of the piston bosses.

[14.]* **15E** A piston for internal combustion engines comprising in combination a head portion having an end wall and a side wall, a guide portion having on one side a cylinder-engaging part disposed to take the angular thrust of a connecting rod during one stroke of the piston, said cylinder-engaging part being separated at its upper end from said side wall by an air gap and being split longitudinally to accommodate expansion incident to the heating of the piston, a pair of separated pin bosses, and walls integrally uniting said bosses, the guide portion and the head portion.

[15.]* **16E** A piston comprising a head and body, internal yielding ribs supporting the head and body, and means on said ribs adapted to form engaging connection with operable parts for said piston.

[16.] **17E** A piston open at one end and having a packing ring supporting portion and a cylinder engaging portion, said cylinder engaging portion having a slot which is cut through the thickness of its peripheral wall and extending from the open end of the piston to said ring supporting portion, a pair of wrist pin bearings depended from said ring supporting portion **and** separated from said cylinder en-

[* Matter enclosed in brackets, struck out in copy.]

gaging portion, and tying means extending from each of said wrist pin bearings each being co-operably connected at their opposite ends to said cylinder engaging portion.

—2— 364997—47

[17.]* **18E** A piston for internal combustion engines comprising a head having downwardly extending resilient arms carrying curved guide members, said head being of less diameter than the diameter of the guide members.

[18.]* **19E** In a piston of the class described, a cup-like head comprising a pressure receiving end and a wall portion, a skirt, circumferentially disconnected from the wall portion of the head and divided from end to end, and skirt carriers connecting said skirt to the pressure receiving end, said skirt carriers being disconnected from the wall portion of the head and susceptible of being slightly flexed radially.

[fol. 2068] [19.]* **20E** A piston having a head with top and side walls in combination with a guide structure connected thereto and comprising diametrically opposite cylinder-engaging parts formed with air spaces between their upper edges and the bottom edge of the side wall of the head, wrist pin bosses between the cylinder-engaging parts, and means joining said bosses and cylinder-engaging parts together, the said joining means being resiliently yieldable and arranged not to engage the cylinder.

[20.]* **21E** A piston having a head and a cross-head structure connected thereto and comprising diametrically opposite slippers, wrist pin bosses between the slippers and means joining said bosses and slippers together, the said joining means being resiliently yieldable.

[21.]* **22E** A piston comprising a head, a skirt having resilient sections separated from said head by a slit extending continuously around the piston, and means for yieldingly connecting said skirt sections with said head.

REMARKS.

Kindly note a change of address of applicant's attorney from 451 Lennox Building, East 9th and Euclid

[*Matter enclosed in brackets struck out in copy.]

Avenue to 1213 Ulmer Building, both in Cleveland, Ohio.

B. D. WATTS,
Attorney for Applicant.

INTERFERENCE.

["A"]* (1)

Interference No. 49569 **Paper No. 17**
Name, Frank Jardine,
Serial No. 450,898
Title, PISTONS
Filed, Mar. 9, 1921
Interference with R. E. Day; G. A. Taylor, H. E. Maynard; S. D. Hartog; E. C. Long and E. J. Gulick.

DECISIONS OF

Primary Examiner,	Dated,
Ex'r of Interferences, **Adverse**	Dated, **June 2/24**
Board,	Dated,
Commissioner,	Dated,

[fol. 2069] REMARKS:

.....

.....

This should be placed in each application or patent involved in interference in addition to the interference letters by Primary Examiner

364997—50

[*Matter enclosed in brackets struck out in copy.]

(U. S. Patent Office Jul 7 1923 Mailed)

2—213

Forwarded from 12 Div. to Examiner of Interferences.
June 15, 1923
Ch-D

Paper No. 18
[Interference.]
["A"]* (1)

DEPARTMENT OF THE INTERIOR

UNITED STATES PATENT OFFICE

Washington, D. C.

Copy sent assignee.

B. D. Watts,
451 Leanox Bldg.,
East 9th & Euclid Ave.,
Cleveland, Ohio.

Please find below a copy of a communication from the Examiner concerning the application of Frank Jardine, Filed Mar. 9, 1921, Serial No. 450,898, PISTONS.

Very respectfully,
THOMAS E. ROBERTSON,
Commissioner of Patents.

Room No. 322

Address only
The Commissioner of Patents
Washington, D. C.

49569

The case, above referred to, is adjudged to interfere with others, hereafter specified, and the question of priority will be determined in conformity with the Rules.

The statement demanded by Rule 110 must be sealed up and filed on or before Aug. 27, 1923, with the subject of the invention, and name of party filing it, indorsed on the envelope. The subject-matter involved in the interference is [fol. 2070] Count.

1. A piston for internal combustion engine comprising in combination a head portion having an end wall and a side wall, a guide portion having on one side a cylinder-engaging part disposed to take the angular thrust of a connecting rod

[* Matter enclosed in brackets, struck out in copy.]

during one stroke of the piston, said cylinder-engaging part being separated at its upper end from said side wall by an air gap and being split longitudinally to accommodate expansion incident to the heating of the piston, a pair of separated pin bosses, and walls integrally uniting said bosses, the guide portion and the head portion.

This interference involves your application above identified and an application for PISTONS, filed by Ray E. Day, of 3825 North 24th St., Tacoma, Wash., whose attorney is Clarence E. Mehlhope, of Marquette Bldg., Chicago, Ill.,

An application for PISTONS, filed by George A. Taylor, of 164 Dana Avenue, Hyde Park, Mass., whose attorney is Macleod, Calver, Copeland and Dike, of Tremont Bldg., Boston, Mass.,

An application for PISTONS, filed by Howard E. Maynard, of 700 Calvert Avenue, Detroit, Michigan, whose

364997—51

450,898—2

attorney is Whittemore, Hulbert & Whittemore, of Penobscot Bldg., Detroit, Michigan,

An application for PISTONS, filed by Stephen D. Hartog, of 3219 Natural Bridge Avenue, St. Louis, Mo., whose attorney is Rippey and Kingsland, of The Rialto Bldg., St. Louis, Mo.,

An application for INTERNAL COMBUSTION ENGINE PISTONS filed by Elmer C. Long, of 1037 Main St., Quincy, Illinois, whose attorney is Herbert G. Fletcher, of 321 International Life Bldg., % Knight Bros., St. Louis, Missouri, and

An application for PISTONS, filed by Edward J. Gulick, of P. O. Box 553, Elkhart, Indiana, whose attorney is Milton Tibbetts, of % Packard Motor Car Company, Detroit, Michigan, and whose assignee is the Cleveland Trust Company, of Cleveland, Ohio, a corporation of Ohio.

[fol. 2071] The relation of the count of the interference to the claims of the respective parties is as follows:

Count	Day	Gulick	Hartog	Jardine	Long	Maynard	Taylor
1	14	15	30	15	10	12	13.

adverse

V. I. C.

P. P. PIERCE,
Examiner, Div. 12.

364997—52

["B"]* (2)

INTERFERENCE.

Paper No. 19

Interference No. 49570
Name, Frank Jardine
Serial No. 450,898
Title, PISTONS
Filed, Mar. 9, 1921

Interference with R. E. Day; G. A. Taylor; E. C. Long; H. E. Maynard; S. D. Hartog and E. J. Gulick

DECISIONS OF

Prima Examiner,	Dated,
Ex'r of Interferences, **Adverse**	Dated, **Apr. 8/24**
Board,	Dated,
Commissioner,	Dated,

REMARKS:

.....

.....

This should be placed in each application or patent involved in interference in addition to the interference letters by Primary Examiner.

364997—53

(U. S. Patent Office Jul 7 1923 Mailed)

2—213

Forwarded from 12 Div. to Examiner of Interferences.
June 15, 1923
Ch-D

Paper No. 20
[INTERFERENCE.]
["B"]* (2)

[* Matter enclosed in brackets, struck out in copy.]

[fol. 2072] DEPARTMENT OF THE INTERIOR

UNITED STATES PATENT OFFICE

Washington, D. C.

Copy sent assignee

B. D. Watts,
451 Lennox Bldg., East 9th & Euclid Ave.,
Cleveland, Ohio.

Please find below a copy of a communication from the Examiner concerning the application of Frank Jardine, Filed Mar. 9, 1921, Serial No. 450,898, PISTONS, **Renewal of application filed March 11, 1920, Ser. No. 364,997.**

Very respectfully,

THOMAS E. ROBERTSON,
Commissioner of Patents.

Room No. 322

Address only
The Commissioner of Patents
Washington, D. C.

49570

The case, above referred to, is adjudged to interfere with others, hereafter specified, and the question of priority will be determined in conformity with the Rules.

The statement demanded by Rule 110 must be sealed up and filed on or before Aug 27 1923, with the subject of the invention, and name of party filing it, indorsed on the envelope. The subject-matter involved in the interference is

Count.

1. A piston comprising a head and body, internal yielding ribs supporting the head and body, and means on said ribs adapted to form engaging connection with operable parts for said piston.

This interference involves your application above identified and an application for PISTONS, filed by Ray E. Day, of 3825 North 24th St., Tacoma, Wash., whose attorney is Clarence E. Mehlhope, of Marquette Bldg., Chicago, Illinois,

An application for PISTONS, filed by George A. Taylor, 164 Dana Ave., Hyde Park, Mass., whose attorney is Macleod,

Calver, Copeland & Dike, of Tremont Bldg., Boston, Mass., [fol. 2073] An application for PISTON FOR AN INTERNAL COMBUSTION MOTOR, filed by Elmer C. Long, of 4834 Beaubien St., Detroit, Michigan, whose attorney is Herbert G. Fletcher, of 1111 International Life Bldg., St. Louis, Mo.,

364997—54

450,898—2

An application for PISTONS, filed by Howard E. Maynard, of 700 Calvert Ave., Detroit, Michigan, whose attorney is Whittemore, Hulbert, & Whittemore, of Penobscot Bldg., Detroit, Mich.,

An application for PISTONS, filed by Stephen D. Hartog, of 3219 Natural Bridge Ave., St. Louis, Mo., whose attorney is Rippey & Kingsland, of The Rialto Bldg., St. Louis, Mo., and

An application for PISTONS, filed by Edward J. Gulick, of P. O. Box 553, Elkhart, Indiana, whose attorney is Milton Tibbetts, of c/o Packard Motor Car Company, Detroit, Michigan, and whose assignee is the Cleveland Trust Company, of Cleveland, Ohio, a corporation of Ohio.

The relation of the count of the interference to the claims of the respective parties is as follows:

Count	Day	Hartog	Gulick	Jardine	Long	Maynard	Taylor
1	15	1	30	16	13	13	14.

P. P. PIERCE,
Examiner, Div. 12.

V.I.C.

364997—55

2—079

INTERFERENCE.

["C"]* (3)
Paper No. 21

Interference No. 49571
Name, Frank Jardine,
Serial No. 450,898
Title, PISTONS
Filed, Mar. 9, 1921.
Interference with R. E. Day; G. A. Taylor; A. Spillman; H. E. Maynard; E. C. Long; E. J. Gulick (Kelm added)

[* Matter enclosed in brackets struck out in copy.]

[fol. 2074] DECISIONS OF

Primary Examiner, Dated,
Ex'r of Interferences, **Adverse** Dated, **June 2/24**
Board, Dated,
Commissioner, Dated,

REMARKS:

This should be placed in each application or patent involved in interference in addition to the interference letters by Primary Examiner.

364997—56

(U. S. Patent Office Jul. 7 1923 Mailed)

2—213

Forwarded from 12 Div. to Examiner of Interferences.

Paper No. 22
[INTERFERENCE.]

June 15, 1923
Ch-D

["C"]* (3)

DEPARTMENT OF THE INTERIOR
UNITED STATES PATENT OFFICE
Washington, D. C.

Copy sent assignee.

B. D. Watts,
451 Lennox Bldg.,
East 9th & Euclid Ave.,
Cleveland, Ohio.

Please find below a copy of a communication from the Examiner concerning the application of Frank Jardine, Filed Mar. 9, 1921, Serial No. 450,898, PISTONS, **renewal of application filed March 11, 1920, Ser. No. 364,997.**

Very respectfully,
THOMAS E. ROBERTSON,
Commissioner of Patents.

[*Matter enclosed in brackets struck out in copy.]

[fol. 2075] Room No. 322

Address only
The Commissioner of Patents
Washington, D. C.

49571

The case, above referred to, is adjudged to interfere with others, hereafter specified, and the question of priority will be determined in conformity with the Rules.

The statement demanded by Rule 110 must be sealed up and filed on or before Aug. 27, 1923, with the subject of the invention, and name of party filing it, indorsed on the envelope. The subject-matter involved in the interference is

Count.

1. A piston open at one end and having a packing ring supporting portion and a cylinder engaging portion, said cylinder engaging portion having a slot which is cut through the thickness of its peripheral wall and extending from the open end of the piston to said ring supporting portion, a pair of wrist pin bearings depended from said ring supporting portion and separated from said cylinder engaging portion, and tying means extending from each of said wrist pin bearings each being cooperably connected at their opposite ends to said cylinder engaging portion.

This interference involves your application above identified and an application for PISTONS, filed by Ray E. Day, of 3825 North 24th St., Tacoma, Wash., whose attorney is Clarence E. Mehlhope, of Marquette Bldg., Chicago, Ill.,

An application for PISTONS. filed by George A. Taylor, of 164 Dana Ave., Hyde Park, Mass., whose attorney is Macleod, Calver, Copeland and Dike, of Tremont Bldg., Boston, Mass.,

An application for ENGINE PISTONS, filed by Albert Spillman, of 261 Payne Ave., North Tonawanda, N. Y.,

364997—57

450,898—2

whose attorney is Geyer & Popp, of 619 Brisbane Bldg., Buffalo, N. Y.,

An application for PISTONS, filed by Howard E. Maynard, of 700 Calvert Avenue, Detroit, Michigan, whose attorney is

Whittemore, Hulbert & Whittemore, of Penobscot Bldg., Detroit, Michigan,

[fol. 2076] An application for PISTON filed by Elmer C. Long, of 1037 Main Street, Quincy, Illinois, whose attorney is Herbert G. Fletcher, of International Life Bldg., St. Louis, Mo., and

An application for PISTONS, filed by Edward J. Gulick, of P. O. Box 553, Elkhart, Ind., whose attorney is Milton Tibbetts, of c/o Packard Motor Car Co., Detroit, Michigan, whose assignee is the Cleveland Trust Company, of Cleveland, Ohio, a corporation of Ohio.

The relation of the count of the interference to the claims of the respective parties is as follows:

Count	Day	Gulick	Jardine	Long	Maynard	Spillman	Taylor
1	16	31	17	1	14	13	15.

P. P. PIERCE,
Examiner, Div. 12.

V. I. C.

364997—58

2-079

INTERFERENCE.

["D"]* (4)

Interference No. 49572 **Paper No. 23**
Name, Frank Jardine,
Serial No. 450,898
Title, PISTONS
Filed, Mar. 9, 1921
Interference with E. J. Gulick; E. C. Long; S. D. Hartog, H. E. Maynard; A. Spillman and G. A. Taylor

DECISIONS OF

Primary Examiner,	Dated,
Ex'r of Interferences, **Adverse**	Dated, **Apr. 10/24**
Board,	Dated,
Commissioner,	Dated,

[*Matter enclosed in brackets struck out in copy.]

REMARKS:

This should be placed in each application or patent involved in interference in addition to the interference letters by Primary Examiner.

364997—59

[fol. 2077] (U. S. Patent Office Jul 7 1923 Mailed)

2-213

Forwarded from 12 Div. to
Examiner of Interferences.
June 15, 1923
Ch-D

Paper No. 24
[INTERFERENCE.]
["D"]* (4)

DEPARTMENT OF THE INTERIOR
UNITED STATES PATENT OFFICE
Washington, D. C.

Copy sent assignee,

B. D. Watts,
451 Lennox Bldg.,
East 9th & Euclid Ave.,
Cleveland, Ohio.

Please find below a copy of a communication from the Examiner concerning the application of Frank Jardine, Filed Mar. 9, 1921, Serial No. 450,898, PISTONS **renewal of application filed March 11, 1920, Ser. No. 364,997.**

Very respectfully,

THOMAS E. ROBERTSON,
Commissioner of Patents.

Room No. 322

Address only
The Commissioner of Patents
Washington, D. C.

49572

The case, above referred to, is adjudged to interfere with others, hereafter specified, and the question of priority will be determined in conformity with the Rules.

[*Matter enclosed in brackets struck out in copy.]

The statement demanded by Rule 110 must be sealed up and filed on or before Aug. 27, 1923, with the subject of the invention, and name of party filing it, indorsed on the envelope. The subject-matter involved in the interference is

Count.

1. A piston having a head with top and side walls in combination with a guide structure connected thereto and comprising diametrically opposite cylinder-engaging parts formed with air spaces between their upper edges and the [fol. 2078] bottom edge of the side wall of the head, wrist pin bosses between the cylinder-engaging parts, and means joining said bosses and cylinder-engaging parts together, the said joining means being resiliently yieldable and arranged not to engage the cylinder.

This interference involves your application above identified and an application for PISTONS, filed by George A. Taylor, of 164 Dana Ave., Hyde Park, Mass., whose attorney is Macleod, Calver, Copeland & Dike, of Tremont Bldg., Boston, Mass.

An application for ENGINE PISTONS, filed by Albert Spillman, of 261 Payne Ave., North Tonawanda, N. Y., whose attorney is Geyer & Popp, of 619 Brisbane Bldg., Buffalo, New York.

An application for PISTONS, filed by Howard E. Maynard, of 700 Calvert Ave., Detroit, Michigan, whose attorney is Whittemore, Hulbert & Whittemore, of Penobscot Bldg., Detroit, Mich.

364997—60

450,898—2

An application for PISTONS, filed by Stephen D. Hartog, of 3219 Natural Bridge Ave., St. Louis, Missouri, whose attorney is Rippey & Kingsland, of The Rialto Bldg., St. Louis, Mo.,

An application for PISTONS FOR INTERNAL COMBUSTION MOTORS filed by Elmer C. Long, of 1037 Main St., Quincy, Illinois, whose attorney is Herbert G. Fletcher, of c/o Knight Bros., 321 International Life Bldg., St. Louis, Mo., and

An application for PISTONS, filed by Edward J. Gulick, of P. O. Box 553, Elkhart, Indiana, whose attorney is Milton Tibbetts, of c/o Packard Motor Car Company, Detroit,

Mich., whose assignee is the Cleveland Trust Company, of Cleveland, Ohio, a corporation of Ohio.

The relation of the count of the interference to the claims of the respective parties is as follows:

Count	Gulick	Hartog	Jardine	Long	Maynard	Spillman	Taylor
1	32	24	20	7	15	16	16.

P. P. PIERCE,
Examiner, Div. 12.

V. I. C.

364997—61

[fol. 2079] 2—079

INTERFERENCE.

["E"]* (5)
Paper No. 25

Interference No. 49573
Name, Frank Jardine
Serial No. 450,898
Title, PISTONS
Filed, Mar. 9, 1921
Interference with E. J. Gulick; E. C. Long; H. E. Maynard; Stephen D. Hartog and R. E. Day

DECISIONS OF

Primary Examiner,	Dated,
Ex'r of Interferences, Adverse	Dated, Apr. 10/24
Board,	Dated,
Commissioner,	Dated,

REMARKS:

.....

.....

This should be placed in each application or patent involved in interference in addition to the interference letters by Primary Examiner.

364997—62

[*Matter enclosed in brackets struck out in copy.]

(U. S. Patent Office. Jul 7 1923 Mailed)

2—213

Forwarded from 12 Div. to Examiner of Interferences. June 15, 1923

Paper No. 26
[Interference.]
#["E"]* (5)

DEPARTMENT OF THE INTERIOR

UNITED STATES PATENT OFFICE

Washington, D. C.

Copy sent assignee.

B. D. Watts,
451 Lennox Bldg.,
East 9th & Euclid Ave.,
Cleveland, Ohio.

Please find below a copy of a communication from the Examiner concerning the application of Frank Jardine, [fol. 2080] Filed Mar. 9, 1921, Serial No. 450,898, Pistons, **renewal of application filed March 11, 1920, Ser. No. 364,997.**

Very respectfully,
THOMAS E. ROBERTSON,
Commissioner of Patents.

Room No. 322

Address only
The Commissioner of Patents
Washington, D. C.

49573

The case, above referred to, is adjudged to interfere with others, hereafter specified, and the question of priority will be determined in conformity with the Rules.

The statement demanded by Rule 110 must be sealed up and filed on or before Aug. 27, 1923, with the subject of the invention, and name of party filing it, indorsed on the envelope. The subject-matter involved in the interference is

Count.

1. A piston comprising a head, a skirt separated at its periphery from the head, and pin bosses connected to the

[*Matter enclosed in brackets struck out in copy.]

head and to the upper and lower parts of the skirt, said skirt being split longitudinally at one side between its connections to said bosses.

This interference involves your application above identified and an application for PISTONS, filed by Ray E. Day, of 3825 North 24th St., Tacoma, Wash., whose attorney is Clarence E. Mehlhope of Marquette Bldg., Chicago, Ill.,

An application for PISTONS, filed by Howard E. Maynard, of 700 Calvert Ave., Detroit, Mich., whose attorney is Whittemore, Hulbert & Whittemore, of Penobscot Bldg., Detroit, Mich.,

An application for PISTONS, filed by Stephen D. Hartog, of 3219 Natural Bridge Avenue, St. Louis, Mo., whose attorney is Rippey & Kingsland, of The Rialto Bldg., St. Louis, Mo.,

364997—63

450,898—2

An application for INTERNAL COMBUSTION ENGINE PISTONS, filed by Elmer C. Long, of 1037 Main St., Quincy, Illinois, whose attorney is Herbert G. Fletcher, of 321 International Life Bldg., c/o Knight Bros., St. Louis, Mo., and

[fol. 2081] An application for PISTONS, filed by Edward J. Gulick, of P. O. Box 553, Elkhart, Indiana, whose attorney is Milton Tibbetts, of c/o Packard Motor Car Company, Detroit, Michigan, and whose assignee is the Cleveland Trust Company, of Cleveland, Ohio, a corporation of Ohio.

The relation of the count of the interference to the claims of the respective parties is as follows:

Count	Day	Gulick	Hartog	Jardine	Long	Maynard
1	10	1	28	12	8	8

P. P. PIERCE,
Examiner, Div. 12.

V. I. C.

364997—64

[*Matter enclosed in brackets struck out in copy.]

2—079

INTERFERENCE. ["H"]* (8)

Interference No. 49576 Paper No. 27
Name, Frank Jardine,
Serial No. 450,898
Title, PISTONS
Filed, Mar. 9, 1921
Interference with E. J. Gulick; H. E. Maynard; E. C. Long; R. E. Day

DECISIONS OF

Primary Examiner,	Dated,
Ex'r of Interferences, Adverse	Dated, Apr. 10/24
Board,	Dated,
Commissioner,	Dated,

REMARKS:

.....

.....

This should be placed in each application or patent involved in interference in addition to the interference letters by Primary Examiner.

364997—65

[fol. 2082] (U. S. Patent Office Jul 7 1923 Mailed)

2—213

Forwarded from 12 Div. to Examiner of Interferences June 15, 1923 Ch-D

Paper No. 28
[INTERFERENCE.]
["H"]* (8)

DEPARTMENT OF THE INTERIOR
UNITED STATES PATENT OFFICE
Washington, D. C.

Copy sent assignee.

B. D. Watts,
451 Lennox Bldg.,
East 9th & Euclid Ave.,
Cleveland, Ohio.

Please find below a copy of a communication from the Examiner concerning the application of Frank Jardine,

[*Matter enclosed in brackets struck out in copy.]

Filed Mar. 9, 1921, Serial No. 450,898, Pistons, original filed March 11, 1920, Ser. No. 364,997.

Very respectfully,

THOMAS E. ROBERTSON,
Commissioner of Patents.

Room No. 322

Address only
The Commissioner of Patents
Washington, D. C.

49576

The case, above referred to, is adjudged to interfere with others, hereafter specified, and the question of priority will be determined in conformity with the Rules.

The statement demanded by Rule 110 must be sealed up and filed on or before Aug 27 1923, with the subject of the invention, and name of party filing it, indorsed on the envelope. The subject-matter involved in the interference is

Count.

1. A piston comprising a head portion, a skirt portion, two separated pin bosses, connecting flanges in the zone of the bosses and extending from the bosses to the skirt on both sides of the bosses, connecting means from each of the bosses to the head portion, the skirt portion being entirely [fol. 2083] separated from the head portion except through the boss connections, and the skirt portion being spilt longitudinally of the piston to permit free expansion and contraction and the skirt portion being cut away adjacent the outer ends of the piston bosses.

This interference involves your application above identified and an application for Pistons, filed by Ray E. Day, of 3825 North 24th St., Tacoma, Wash., and whose attorney is Clarence E. Mehlhope, of Marquette Bldg., Chicago, Illinois,

An application for Pistons, filed by Elmer C. Long, of 4834 Beaubien St., Detroit, Mich., and whose attorney is Herbert G. Fletcher of International Life Bldg., St. Louis, Mo.,

An application for Pistons, filed by Howard E. Maynard,

of 700 Calvert Ave., Detroit, Michigan, and whose attorney is Whittemore, Hulbert & Whittemore, of Pe-

364997—66

450,898—2

nobscot Bldg., Detroit, Michigan, and

An application for Pistons, filed by Edward J. Gulick, of P. O. Box 553, Elkhart, Indiana, and whose attorney is Milton Tibbetts, of c/o Packard Motor Car Co., Detroit, Michigan, and whose assignee is the Cleveland Trust Company, a corporation of Ohio.

The relation of the count of the interference to the claims of the respective parties is as follows:

Count	Day	Gulick	Jardine	Long	Maynard
1	12	12	14	11	10

P. P. PIERCE,
Examiner, Div. 12.

V.I.C.

364997—67

2—079

INTERFERENCE. ["I"]* (9)

Interference No. 49577 **Paper No. 29**
Name, Frank Jardine,
Serial No. 450,898
Title, Pistons
Filed, Mar. 9, 1921
Interference with E. J. Gulick; E. C. Long; H. E. Maynard & R. E. Day

[fol. 2084]

DECISIONS OF

Primary Examiner,		Dated,
Ex'r of Interferences,	**Adverse**	Dated, **Dec. 20, 1923**
Board,		Dated,
Commissioner,		Dated,

REMARKS:

.....

.....

[*Matter enclosed in brackets struck out in copy.]

This should be placed in each application or patent involved in interference in addition to the interference letters by Primary Examiner.

364997—68

(U. S. Patent Office Jul 7 1923 Mailed)

2—213

Forwarded from 12 Div. to Examiner of Interferences.
June 15, 1923
Ch-D

Paper No. 30
[INTERFERENCE.]
["I"] (9)

DEPARTMENT OF THE INTERIOR
UNITED STATES PATENT OFFICE
Washington, D. C.

Copy sent assignee

B. D. Watts,
451 Lennox Bldg.,
East 9th & Euclid Ave.,
Cleveland, Ohio.

Please find below a copy of a communication from the Examiner concerning the application of Frank Jardine, Filed Mar. 9, 1921, Serial No. 450,898, Pistons, original filed Mar. 11, 1920, Ser. No. 364,997.

Very respectfully,
THOMAS E. ROBERTSON,
Commissioner of Patents.

Room No. 322

Address only
The Commissioner of Patents
Washington, D. C.

49577

The case, above referred to, is adjudged to interfere with others, hereafter specified, and the question of priority will be determined in conformity with the Rules.
[fol. 2085] The statement demanded by Rule 110 must be sealed up and filed on or before Aug 27 1923, with the sub-

ject of the invention, and name of party filing it, indorsed on the envelope. The subject-matter involved in the interference is

Count

1. A piston comprising a head portion, a skirt portion, two separated pin bosses, connecting flanges in the zone of the bosses and extending from the bosses to the skirt on both sides of the bosses, connecting means from each of the bosses to the head portion, the skirt portion being entirely separated from the head portion except through the boss connections, and the skirt portion being split longitudinally of the piston to permit free expansion and contraction.

This interference involves your application above identified and an application for Pistons, filed by Ray E. Day of 3825 North 24th St., Tacoma, Wash., and whose attorney is Clarence E. Mehlhope, of Marquette Bldg., Chicago, Ill.

An application for Pistons, filed by Howard E. Maynard, of 700 Calvert Ave., Detroit, Mich., and whose attorney is Whittemore, Hulbert & Whittemore, of Penobscot Bldg., Detroit, Mich.

An application for INTERNAL COMBUSTION ENGINE PISTONS, filed by Elmer C. Long, of 1037 Main St., Quincy, Ill., and whose attorney is Herbert G. Fletcher, of 321

364997—69

450,898—2

International Life Bldg., c/o Knight Bros., St. Louis, Mo., and

An application for Pistons, filed by Edward J. Gulick, of P. O. Box 553, Elkhart, Indiana, whose attorney is Milton Tibbetts, c/o Packard Motor Car Company, Detroit, Mich., and whose assignee is The Cleveland Trust Company, of Cleveland, Ohio, a corporation of Ohio.

The relation of the count of the interference to the claims of the respective parties is as follows:

Count	Day	Gulick	Jardine	Long	Maynard
1	11	11	13	9	9

V. I. C.

P. P. PIERCE,
Examiner, Div. 12.

364997—70

810

[fol. 2086] 2—079

INTERFERENCE ["J"]* (10)

Interference No. 49578 Paper No. 31
Name, Frank Jardine,
Serial No. 450,898
Title, Pistons
Filed, Mar. 9, 1921
Interference with E. C. Long; S. D. Hartog; A. Spillman; R. E. Day

DECISIONS OF

[Primary]* Law Examiner, Interference dissolved	Dated,	Apr 4 1924
Ex'r of Interferences, Adverse	Dated,	Dec 30/25
Board, "	Dated,	Nov. 10/24
Commissioner, Affirmed	Dated,	Oct 26 1927
Court "	"	Jany 13/30

REMARKS:

.....

.....

This should be placed in each application or patent involved in interference in addition to the interference letters by Primary Examiner.

364997—71

(U. S. Patent Office Jul 7 1923 Mailed)
2—213

Forwarded from 12 Div. to Examiner of Interferences. June 15, 1923

Paper No. 32
[INTERFERENCE.]
["J"]* (10)

DEPARTMENT OF THE INTERIOR
UNITED STATES PATENT OFFICE
Washington, D. C.

B. D. Watts,
451 Lennox Bldg.,
East 9th & Euclid Ave.,
Cleveland, Ohio.

Please find below a copy of a communication from the Examiner concerning the application of Frank Jardine,

[* Matter enclosed in brackets struck out in copy.]

[fol. 2087] Filed Mar. 9, 1921, Serial No. 450,898, PISTONS, original filed Mar. 11, 1920, Ser. No. 364,997.

Very respectfully,

THOMAS E. ROBERTSON,
Commissioner of Patents.

Room No. 322

Address only
The Commissioner of Patents
Washington, D. C.

49578

The case, above referred to, is adjudged to interfere with others, hereafter specified, and the question of priority will be determined in conformity with the Rules.

The statement demanded by Rule 110 must be sealed up and filed on or before Aug. 27, 1923, with the subject of the invention, and name of party filing it, indorsed on the envelope. The subject-matter involved in the interference is

Count.

1. In a piston of the class described, a cup-like head comprising a pressure receiving end and a wall portion, a skirt circumferentially disconnected from the wall portion of the head and divided from end to end, and skirt carriers connecting said skirt to the pressure receiving end, said skirt carriers being disconnected from the wall portion of the head and susceptible of being slightly flexed radially.

This interference involves your application above identified and an application for PISTONS, filed by Ray E. Day, of 3825 North 24th St., Tacoma, Wash., and whose attorney is Clarence E. Mehlhope, of Marquette Bldg., Chicago, Ill.,

An application for ENGINE PISTONS, filed by Albert Spillman, of 261 Payne Ave., North Tonawanda, N. Y., whose attorney is Geyer & Popp, of 619 Brisbane Bldg., Buffalo, N. Y.,

An application for PISTONS, filed by Stephen D. Hartog, of 3219 Natural Bridge Ave., St. Louis, Mo., and whose attorney is Rippey & Kingsland, of The Rialto Bldg., St. Louis, Mo., and

364997—72

[fol. 2088] 450,898—2

An application for INTERNAL COMBUSTION ENGINE PISTONS, filed by Elmer C. Long, of 1037 Main St., Quincy, Illinois,

and whose attorney is Herbert G. Fletcher, of 321 International Life Bldg., % Knight Bros., St. Louis, Mo.

The relation of the count of the interference to the claims of the respective parties is as follows:

Count	Day	Spillman	Hartog	Jardine	Long
1	17	15	10	19	12.

P. P. PIERCE,
Examiner, Div. 12.

V. I. C.

364997—73

2—079

INTERFERENCE.

["K"]* (11)
Paper No. 33

Interference No. 49579
Name, Frank Jardine
Serial No. 450,898
Title, PISTONS
Filed, Mar. 9, 1921.
Interference with E. C. Long; S. D. Hartog; A. Spillman.

DECISIONS OF

Primary Examiner,	Dated,
Ex'r of Interferences, **Adverse**	Dated, **Sept. 3/24**
Board,	Dated,
Commissioner,	Dated,

REMARKS:

.....

.....

This should be placed in each application or patent involved in interference in addition to the interference letters by Primary Examiner.

364997—74

[fol. 2089] (U. S. Patent Office Jul 7 1923 Mailed)

2—213

[* Matter enclosed in brackets struck out in copy.]

Forwarded from 12 Div. to
Examiner of Interferences.
June 15, 1923
Ch-D

Paper No. 34
[INTERFERENCE.]
"K"

DEPARTMENT OF THE INTERIOR
UNITED STATES PATENT OFFICE
Washington, D. C.

Copy sent assignee.

B. D. Watts,
451 Lennox Bldg.,
East 9th & Euclid Ave.,
Cleveland, Ohio.

Please find below a copy of a communication from the Examiner concerning the application of Frank Jardine, Filed Mar. 9, 1921, Serial No. 450,898; PISTONS, **renewal of appln. filed March 11/20, No. 364,997.**

Very respectfully,
THOMAS E. ROBERTSON,
Commissioner of Patents.

Room No. 322

Address only
The Commissioner of Patents
Washington, D. C.

49579

The case, above referred to, is adjudged to interfere with others, hereafter specified, and the question of priority will be determined in conformity with the Rules.

The statement demanded by Rule 110 must be sealed up and filed on or before Aug. 27, 1923, with the subject of the invention, and name of party filing it, indorsed on the envelope. The subject-matter involved in the interference is

Count.

1. A piston for internal combustion engines comprising a head having downwardly extending resilient arms carrying curved guide members, said head being of less diameter than the diameter of the guide members.

[fol. 2090] This interference involves your application above identified and an application for ENGINE PISTONS,

filed by Albert Spillman, of 261 Payne Ave., North Tonawanda, New York, and whose attorney is Geyer & Popp, of 619 Brisbane Bldg., Buffalo, N. Y.,

An application for PISTONS, filed by Stephen D. Hartog, of 3219 Natural Bridge Ave., St. Louis, Mo., and whose attorney is Rippey & Kingsland, of The Rialto Bldg., St. Louis, Mo., and

An application for INTERNAL COMBUSTION ENGINE PISTONS, filed by Elmer C. Long, of 1037 Main St., Quincy, Ill., and whose attorney is Herbert G. Fletcher, of 321 International Life Bldg., % Knight Bros., St. Louis, Mo.

364997—75

450898—2

The relation of the count of the interference to the claims of the respective parties is as follows:

Count	Hartog	Jardine	Long	Spillman
1	8	18	11	14.

P. P. PIERCE,
Examiner, Div. 12.

V. I. C.

364997—76

2—079

["M"]* (13)

INTERFERENCE.

Interference No. 49581 **Paper No. 35**
Name, Frank Jardine,
Serial No. 450,898
Title, Pistons
Filed, Mar. 9, 1921
Interference with Stephen D. Hartog: Elmer C. Long.

DECISIONS OF

Primary Examiner,	Dated,
Ex'r of Interferences, **Adverse**	Dated, **Apr 8/24**
Board,	Dated,
Commissioner,	Dated,

[* Matter enclosed in brackets struck out in copy.]

[fol. 2091] REMARKS:

.....

.....

This should be placed in each application or patent involved in interference in addition to the interference letters by Primary Examiner.

364997—77

(U. S. Patent Office Jul. 7 1923 Mailed)

2-213

Forwarded from 12 Div. to Examiner of Interferences.
June 15, 1923

Paper No. 36
[Interference.]
"M"

DEPARTMENT OF THE INTERIOR
UNITED STATES PATENT OFFICE
Washington, D. C.

Copy sent assignee.

B. D. Watts,
451 Lennox Bldg.,
East 9th & Euclid Ave.,
Cleveland, Ohio.

Please find below a copy of a communication from the Examiner concerning the application of Frank Jardine, Filed March 9, 1921, Serial No. 450,898, Pistons.

Very respectfully,
THOMAS E. ROBERTSON,
Commissioner of Patents.

Room No. 322

Address only
The Commissioner of Patents
Washington, D. C.

49581

The case, above referred to, is adjudged to interfere with others, hereafter specified, and the question of priority will be determined in conformity with the Rules.

The statement demanded by Rule 110 must be sealed up and filed on or before Aug. 27, 1923, with the subject of the invention, and name of party filing it, indorsed on the en- [fol. 2092] velope. The subject-matter involved in the interference is

Count.

1. A piston having a head and a cross-head structure connected thereto and comprising diametrically opposite slippers, wrist pin bosses between the slippers and means joining said bosses and slippers together, the said joining means being resiliently yieldable.

This interference involves your application above identified and an application for Pistons, filed by Stephen D. Hartog, of 3219 Natural Bridge Ave., St. Louis, Mo., and whose attorney is Rippey & Kingsland, of The Rialto Bldg., St. Louis, Mo., and

An application for Pistons for Internal Combustion Motors, filed by Elmer C. Long, of 1037 Main St., Quincy, Illinois, whose attorney is Herbert G. Fletcher, of c/o Knight Bros., 321 International Life Bldg., St. Louis, Mo.

The relation of the count of the interference to the claims of the respective parties is as follows:

Count	Hartog	Jardine	Long
1	7	21	8

V. I. C.

P. P. PIERCE,
Examiner, Div. 12.

364997—78

2—079

INTERFERENCE.

["N"]* (14)
Paper No. 37

Interference No. 49582
Name, Frank Jardine
Serial No. 450,898
Title, Pistons
Filed, Mar. 9, 1921
Interference with H. E. Maynard: R. E. Day

[* Matter enclosed in brackets struck out in copy.]

DECISIONS OF

Primary Examiner,	Dated,
Ex'r of Interferences, **Favorable**	Dated, **Nov 19/23**
Board,	Dated,
Commissioner,	Dated,

[fol. 2093] REMARKS:

.....

.....

This should be placed in each application or patent involved in interference in addition to the interference letters by Primary Examiner.

364997—79

(U. S. Patent Office Jul. 7 1923 Mailed)

2—213

Forwarded from 12 Div. to Examiner of Interferences.
June 15, 1923
Ch-D

Paper No. 38
[Interference.]
["N"]* **(14)**

DEPARTMENT OF THE INTERIOR
UNITED STATES PATENT OFFICE
Washington, D. C.

Copy sent assignee.

B. D. Watts,
451 Lennox Bldg.,
East 9th & Euclid Ave.,
Cleveland, Ohio.

Please find below a copy of a communication from the Examiner concerning the application of Frank Jardine, filed Mar. 9, 1921, Serial No. 450,898, Pistons, **original filed Mar. 11, 1920, Ser. No. 364,997.**

Very respectfully,
THOMAS E. ROBERTSON,
Commissioner of Patents.

[* Matter enclosed in brackets struck out in copy.]

Room No. 322

Address only
The Commissioner of Patents
Washington, D. C.

49582

The case, above referred to, is adjudged to interfere with others, hereafter specified, and the question of priority will be determined in conformity with the Rules.

The statement demanded by Rule 110 must be sealed up and filed on or before Aug. 27, 1923, with the subject of the invention, and name of party filing it, indorsed on the envelope. The subject-matter involved in the interference is

[fol. 2094] Count.

1. In a piston for an internal combustion engine, the combination of a head having ring grooves therein, a plurality of webs integral with said head and having diametrically opposite piston pin bosses therein, a skirt integral with said webs relieved adjacent said webs and separated from the head by circumferential slots and provided with a longitudinal slot connecting the lower end of the piston with one of the circumferential slots.

This interference involves your application above identified and an application for Pistons, filed by Ray E. Day, of 3825 North 24th St., Tacoma, Wash., and whose attorney is Clarence E. Mehlhope, of Marquette Bldg., Chicago, Ill., and

An application for Pistons, filed by Howard E. Maynard, of 700 Calvert Aye., Detroit, Mich., and whose attorney is Whittemore, Hulbert & Whittemore, of Penobscot Bldg., Detroit, Mich.

The relation of the count of the interference to the claims of the respective parties is as follows:

Count	Day	Jardine	Maynard
1	19	3	17

V. I. C.

P. P. PIERCE,
Examiner, Div. 12.

2—079

INTERFERENCE.

["O"]* (15)

Interference No. 49583 — Paper No. 39

Name, Frank Jardine
Serial No. 450,898
Title, Pistons

Filed, Mar. 9, 1921
Interference with S. D. Hartog; Albert Spillman

DECISIONS OF

Primary Examiner,	Dated,
Ex'r of Interferences,	Dated,
Board,	Dated,
Commissioner,	Dated,

[fol. 2095] REMARKS

.....

.....

This should be placed in each application or patent involved in interference in addition to the interference letters by Primary Examiner.

364997—81

(U. S. Patent Office Jul 7 1923 Mailed)

2—213

Forwarded from 12 Div. to Examiner of Interferences.
June 15, 1923

Paper No. 40
[Interference.]
["O"]* (15)

Ch-D

[* Matter enclosed in brackets, struck out in copy.]

DEPARTMENT OF THE INTERIOR
UNITED STATES PATENT OFFICE
Washington, D. C.

Copy sent assignee.

B. D. Watts,
451 Lennox Bldg.,
East 9th & Euclid Ave.,
Cleveland, Ohio.

Please find below a copy of a communication from the Examiner concerning the application of Frank Jardine, Filed Mar. 9, 1921, Serial No. 450,898—Pistons, **original filed Mar. 11, 1920, Ser. No. 364,997.**

Very respectfully,
THOMAS E. ROBERTSON,
Commissioner of Patents.

Room No. 322

Address only
The Commissioner of Patents
Washington, D. C.

49583

The case, above referred to, is adjudged to interfere with others, hereafter specified, and the question of priority will be determined in conformity with the Rules.

The statement demanded by Rule 110 must be sealed up and filed on or before Aug. 27, 1923, with the subject of the invention, and name of party filing it, indorsed on [fol. 2096]. the envelope. The subject-matter involved in the interference is

Count.

1. A piston comprising a head, a skirt having resilient sections separated from said head by a slit extending continuously around the piston, and means for yieldingly connecting said skirt sections with said head.

This interference involves your application above identified and an application for Engine Pistons, filed by Albert Spillman, of 261 Payne Ave., North Tonawanda, N. Y., and whose attorney is Geyer & Popp, of 619 Brisbane Bldg., Buffalo, N. Y., and

An application for Pistons, filed by Stephen D. Hartog, of 3219 Natural Bridge Ave., St. Louis, Mo., and whose attorney is Rippey & Kingsland, of The Rialto Bldg., St. Louis, Mo.

The relation of the count of the interference to the claims of the respective parties is as follows:

Count	Hartog	Jardine	Spillman
1	34	22	1

P. P. PIERCE,
Examiner, Div. 12.

V. I. C.

364997—82

2—079

INTERFERENCE.

"U" (21)

Interference No. 49589 **Paper No. 41**
Name, Frank Jardine
Serial No. 450,898
Title, Pistons
Filed, Mar. 9, 1921
Interference with Howard E. Maynard

DECISIONS OF

Primary Examiner	Dated,
Ex'r of Interferences, **Favorable**	Dated, **Nov 19/23**
Board,	Dated,
Commissioner,	Dated,

[fol. 2097] REMARKS:

.....

.....

This should be placed in each application or patent involved in interference in addition to the interference letters by Primary Examiner.

364997—83

(U. S. Patent Office Jul 7 1923 Mailed)

2—213

Forwarded from 12 Div. to Examiner of Interferences.
June 15, 1923
Ch-D

Paper No. 42
[INTERFERENCE.]
"U"

DEPARTMENT OF THE INTERIOR
UNITED STATES PATENT OFFICE
Washington, D. C.

B. D. Watts,
451 Lennox Bldg., East 9th & Euclid Ave.,
Cleveland, Ohio.

Please find below a copy of a communication from the Examiner concerning the application of Frank Jardine, Filed Mar. 9, 1921, Serial No. 450,898, PISTONS, **renewal of appln. filed March 11, 1920, No. 364,997.**

Very respectfully,
THOMAS E. ROBERTSON,
Commissioner of Patents.

Room No. 322

Address only
The Commissioner of Patents
Washington, D. C.

49589

The case, above referred to, is adjudged to interfere with others, hereafter specified, and the question of priority will be determined in conformity with the Rules.

The statement demanded by Rule 110 must be sealed up and filed on or before Aug. 27, 1923, with the subject of the invention, and name of party filing it, indorsed on the envelope. The subject-matter involved in the interference is

[fol. 2098] Count.

1. In a piston for an internal combustion engine the combination of a head comprising a head disc and a peripheral flange having ring grooves therein, a pair of cordal webs, substantially rectangular in shape and located opposite each other in the piston, connected integrally at their upper edges

to the peripheral flange of the piston, diametrically opposite wrist pin bosses, one in each of said webs, a skirt for said piston integrally connected to each of the side edges of the webs and cut away so as to expose each of the rectangular webs and the piston pin bosses from the outside of the piston, said piston being provided with circumferential slots between the skirt and head and with a longitudinal slot extending from one of the circumferential slots to the open end of the piston.

This interference involves your application above identified and an application for PISTONS, filed by Howard E. Maynard, of 700 Calvert Ave., Detroit, Michigan, and whose attorney is Whittemore, Hulbert & Whittemore, of Penobscot Bldg., Detroit, Michigan.

The relation of the count of the interference to the claims of the respective parties is as follows:

Count	Jardine	Maynard
1	6	18

P. P. PIERCE,
Examiner, Div. 12.

V. I. C.

364997—84

2—079

INTERFERENCE

"V" 22
Paper No. 43

Interference No. 49590
Name, Frank Jardine,
Serial No. 450,898
Title, PISTONS
Filed, Mar. 9, 1921
Interference with Elmer C. Long

[fol. 2099] DECISIONS OF

Primary Examiner,	Dated,
Ex'r of Interferences, Adverse	Dated, Apr. 8/24
Board,	Dated,
Commissioner,	Dated,

REMARKS:

. . . . . .

. . . . . .

This should be placed in each application or patent involved in interference in addition to the interference letters by Primary Examiner.

364997—85

(U. S. Patent Office Jul 7 1923 Mailed)

2—213

Forwarded from 12 Div. to Examiner of Interferences.
June 15, 1923
Ch-D

Paper No. 44
[INTERFERENCE.]
"V"

DEPARTMENT OF THE INTERIOR
UNITED STATES PATENT OFFICE
Washington, D. C.

B. D. Watts,
451 Lennox Bldg.,
East 9th & Euclid Ave.,
Cleveland, Ohio.

Please find below a copy of a communication from the Examiner concerning the application of Frank Jardine, Filed Mar. 9, 1921; Serial No. 450,898, PISTONS, **renewal of appln. filed March 11/20 No. 364,997.**

Very respectfully,
THOMAS E. ROBERTSON,
Commissioner of Patents.

Room No. 322

Address only
The Commissioner of Patents
Washington, D. C.

49590

The case, above referred to, is adjudged to interfere with others, hereafter specified, and the question of priority will be determined in conformity with the Rules.

[fol. 2100] The statement demanded by Rule 110 must be sealed up and filed on or before Aug. 27, 1923, with the subject of the invention, and name of party filing it, indorsed on the envelope. The subject-matter involved in the interference is

Counts.

1. In a piston for an internal combustion engine, the combination of a piston head having a depending ring flange, two pairs of curved guide members oppositely disposed with relation to the axis of the piston, the curved members of each pair thereof being separated from the ring flange and from each other by continuous air gaps, and webs carrying wrist pin bosses, the said curved members, piston head and webs being united in an integral unitary structure.

2. In a piston for an internal combustion engine, the combination of a piston head having a depending ring flange, two pairs of curved guide members oppositely disposed with relation to the axis of the piston, the curved members of each pair thereof being separated from the ring flange and from each other by continuous air gaps, wrist pin bosses and webs connecting the wrist pin bosses with certain of said guide members, said guide members piston head and webs being united in an integral unitary structure.

This interference involves your application above identified and an application for PISTONS FOR INTERNAL COMBUSTION MOTORS, filed by Elmer C. Long, of 1037 Main St., Quincy, Illinois, and whose attorney is Herbert G. Fletcher, of c/o Knight Bros., 321 International Life Bldg., St. Louis, Missouri.

364997—86

450,898—2

The relation of the counts of the interference to the claims of the respective parties is as follows:

Counts	Jardine	Long
1	1	9
2	11	10

P. P. PIERCE,
Examiner, Div. 12.

V. I. C.

364997—87

[fol. 2101] (U. S. Patent Office Dec 3 1923 Mailed)

2—260

Div. 12 Room 322 Paper No. 45

Address only

"The Commissioner of Patents,
Washington, D. C.,"
and not any official by name.

Ch-D

All communications respecting this application should give the serial number date of filing, title of invention, and name of the applicant.

DEPARTMENT OF THE INTERIOR

UNITED STATES PATENT OFFICE

Washington

Richey, Slough and Watts,
1213 Ulmer Building,
Cleveland, Ohio.

Please find below a communication from the Examiner in charge of the application of Frank Jardine, Filed Mar. 9, 1921, Serial No. 450,898, Pistons. Originally filed Mar. 11, 1920, Serial No. 364,997.

Thomas E. Robertson,
Commissioner of Patents.

49571

In accordance with the provisions of Rule 129, the application for patent filed by Gustave R. Kelm, whose post-office address is c/o Walker M. Levett Company, 417 East 23rd St., New York, New York, whose attorney is Clarence D. Kerr, of No. 5 Nassau Street, New York, New York, and whose assignee is the Walker M. Levett Company, of New York, New York, a corporation of New York, is hereby added to Interference No. 49571, between Day v. Taylor v. Spillman v. Maynard v. Jardine v. Long v. Gulick, to which

you are a party. The claim of Kelm's application corresponding to the count of the issue is

Count	Claim
1	7.

[fol. 2102] The new party only is given until the Dec. 31, 1923, day of ....., 19..., within which to file the preliminary statement required by Rule 110.

The issue of the interference remains unchanged.

P. P. PIERCE,
Examiner, Div. 12.

V. I. C.

364997—88

(U. S. Patent Office Dec 3 1923 Mailed)

2—260

Div. 12 Room 322 **Paper No.** [45]* **46**

Address only

"The Commissioner of Patents,
Washington, D. C.,"
and not any official by name.

Ch-D

All communications respecting this application should give the serial number, date of filing, title of invention, and name of the applicant.

DEPARTMENT OF THE INTERIOR

UNITED STATES PATENT OFFICE

Washington

Richey, Slough and Watts,
1213 Ulmer Building,
Cleveland, Ohio.

Please find below a communication from the EXAMINER in charge of the application of Frank Jardine, Filed Mar. 3, 1921, Serial No. 450,898, Pistons originally filed Mar. 11, 1920, Serial No. 364,997.

THOMAS E. ROBERTSON,
Commissioner of Patents.

[*Matter enclosed in brackets, struck out in copy.]

49572

In accordance with the provisions of Rule 129, the application for patent filed by Gustav R. Kelm, whose post-office address is c/o Walker M. Levett Company, No. 417 East 23rd Street, New York, New York, whose attorney is Clarence D. Kerr, of No. 5 Nassau Street, New York, N. Y., [fol. 2103] and whose assignee is the Walker M. Levett Company, of New York, New York, a corporation of New York is hereby added to Interference No. 49572, between Taylor v. Spillman v. Maynard v. Jardine v. Hartog v. Long v. Gulick, to which you are a party. The claim of Kelm's application corresponding to the count of the issue is:

Count	Claim
1	8.

The new party only is given until the Dec 31 1923, day of ....., 19...., within which to file the preliminary statement required by Rule 110.

The issue of the interference remains unchanged.

P. P. PIERCE,
Examiner, Div. 12.

V. I. C.

364997—89

(U. S. Patent Office Dec 3 1923 Mailed)

2—260

Div. 12 Room 322 **Paper No. 47**

Address only

"The Commissioner of Patents,
Washington, D. C.,"
and not any official by name.
Ch-D

All communications respecting this application should give the serial number date of filing, title of invention, and name of the applicant.

DEPARTMENT OF THE INTERIOR

UNITED STATES PATENT OFFICE

Washington

(Copy sent Assignee)

Richey, Slough and Watts,
1213 Ulmer Building,
Cleveland, Ohio.

Please find below a communication from the EXAMINER in charge of the application of Frank Jardine, Filed March 9, 1921, Serial No. 450,898, originally filed March 11, 1920, Serial No. 364,997, Pistons.

THOMAS E. ROBERTSON,
Commissioner of Patents.

[fol. 2104] 49581

In accordance with the provisions of Rule 129, the application for patent filed by Gustav R. Kelm, whose post-office address is c/o Walker M. Levett Company, 417 East 23rd Street, New York, New York, whose attorney is Clarence D. Kerr, No. 5 Nassau Street, New York, New York, and whose assignee is the Walker M. Levett Company, of New York, New York, a corporation of New York, is hereby added to Interference No. 49581 between Jardine v. Hartog v. Long to which you are a party. The claims of Kelm's application corresponding to the count of the issue is:

Count	Claim
1	9.

The new party only is given until the Dec 31 1923 day of ....., 19...., within which to file the preliminary statement required by Rule 110.

The issue of the interference remains unchanged.

P. P. PIERCE,
Examiner, Div. 12.

V. I. C.

364997—90

(Mail Room Nov 5 1923 U. S. Patent Office)
(Docket Division Nov. 5 1923)

450,898—48
Doc

DEPARTMENT OF THE INTERIOR
UNITED STATES PATENT OFFICE
Washington, D. C.

Applicant —Frank Jardine
Invention —Pistons
Serial No. —364,997, Renewal No. 450,898
Filed —March 9, 1921
Div 12 —Room 322

Cleveland, O., Nov. 3, 1923.

Hon. Commissioner of Patents,
Washington, D. C.

Sir:—

I hereby substitute in my place as attorneys in the above entitled case, the firm of Richey, Slough & Watts, Register No. 11,730, (a partnership composed of F. O. Richey, F. M. Slough, B. D. Watts and W. M. Hart), 1213 Ulmer Building, Cleveland, Ohio, with all the powers originally delegated to myself.

[fol. 2105] And I hereby request that this substitution apply to each of the interferences in which the said application is now involved, identified by number as follows:—

No. 49,569	No. 49,577
49,570	49,578
49,571	49,579
49,572	49,581
49,573	49,582
49,576	49,583
	49,589
	49,590

B. D. Watts,
Attorney of Record.

The foregoing substitution is hereby approved.
Aluminum Manufacturers, Inc.
By W. P. King,
President.
Assignee of Record

(U. S. I. R. Documentary Stamp 25 Cents.)

364997—91

(Mail Room Nov 12 1925 U. S. Patent Office)

(Docket Division Nov 17 1925 U. S. Patent Office)

Intf. No. 49578 T. B.
Briefs for Jardine Nov. 16/25 **450,898—49**
[49572 49569 T. B. 49589 dist.]*

IN THE UNITED STATES PATENT OFFICE

Applicant Frank Jardine
Application Pistons
Filed March 9, 1921
Serial No. 450,898
Docket No. 1977

Cleveland, Ohio,
November 10, 1925.

The Commissioner of Patents,
Washington, D. C.

Sir:

I hereby appoint the firm of Richey & Watts, 1983 Union Trust Bldg., Cleveland, Ohio, (composed of F. O. Richey and [fol. 2106] B. D. Watts), Register No. 11,730 as substitute attorneys with all of the powers originally given to me, in the above entitled application.

B. D. Watts,
Attorney of Record.

(U. S. I. R. Documentary Stamp 25 Cents.)

364997—92

(Mail Division Aug 13 1928 U. S. Patent Office)

9 49583 U. S. Patent Office
18 49578 Aug 14 1928
24 Division 12 Paper No. 50
Not ent.

[* Matter enclosed in brackets struck out in copy.]

IN THE UNITED STATES PATENT OFFICE

Applicant —Frank Jardine
Application —Pistons
Serial No. —450,898
Filed —March 9, 1921

Cleveland, Ohio,
August 7, 1928.

The Commissioner of Patents,
F Washington, D. C.
Sir:
Applicant hereby amends as follows:
Add the following claim—

A one piece piston comprising a head and a skirt, the skirt having boss carrying portions exteriorly relieved and arranged opposite each other and secured to the head by substantially rigid connectors to cause radially outward and inward movement of the portions under operation conditions of the piston, the skirt also having opposite bearing wall portions arranged between the said boss carrying portions and each separated from the head by a slot of greater circumferential length than the corresponding length of the said portions.

Per H.

Respectfully submitted,
FRANK JARDINE,
By RICHEY & WATTS,
His Attorneys.

[fol. 2107] REMARKS

Applicant makes the above claim which is Count 4 of Interference No. 56,380, Franquist vs. Covert.

The claim is Covert's claim 15 and Franquist's claim 31. Applicant has recently learned that an interference regarding this subject matter existed and has made the claim promptly upon learning of the same.

The claim reads upon the Jardine construction as follows: The head of the piston is shown at 1 and the skirt at 2. The

boss-carrying portions are shown at 6 which are relieved about the bosses. The boss-carrying portions are arranged opposite to each other and secured to the head by substantially rigid connectors to which the reference numerals 9 are attached and which cause the outward and inward movement of the skirt portions. The opposite bearing walls of the skirt portions are shown at 10, each of which is separated from the head by slots 11 which extend as is best shown in the upper left-hand corner of Fig. 1 beyond the bearing faces.

Respectfully submitted,
RICHEY & WATTS,
Applicant's Attorneys.
364997—94

(Mailed Feb 8 1930)

Div. 12 Room 380 260 CAK:JTE **Paper No. 51**

Address only
"The Commissioner of Patents,
Washington, D. C.,"
and not any official by name.

All communications respecting this application should give the serial number, date of filing, and name of the applicant

DEPARTMENT OF COMMERCE
UNITED STATES PATENT OFFICE

Washington Feb. 8, 1930.

Please find below a communication from the Examiner in charge of this application.

THOMAS E. ROBERTSON,
Commissioner of Patents.

[fol. 2108]

Applicant: Frank Jardine,
Ser. No. 450,898 (Renewal)
Filed Mar. 9, 1921
For Pistons.

Richey & Watts,
1983 Union Trust Bldg.,
Cleveland, Ohio.

Interferences 49,569; 49,570; 49,571; 49,572; 49,573; 49,576; 49,577; 49,578; 49,579; 49,581; 49,583; and 49,590

having been decided adverse to the applicant, claims 1, and 11 to 22, inclusive, are *finally* rejected in accordance with the provisions of Rule 132.

P. P. PIERCE,
Examiner.

CAK

364997—95

I 900

(Chief Clerk May 8 30 U. S. Patent Office)

U. S. Patent Office
May 8 1930
Division 12, **Paper No. 52**

Applicant —Frank Jardine
Application—Pistons
Serial No. [—364,997]* **450,898**
Filed —March 9, 1921
Docket No. —1977

Division 12

Cleveland, Ohio, May 7, 1930.

Hon. Commissioner of Patents,
Washington, D. C.

Sir:

G In response to Official Action dated February 8, 1930 applicant amends as follows:

Claim 4, line 7, cancel "connecting" and substitute —*lying on a line extending from*—. Same line cancel "with" and substitute —*to*—.

Claim 5, line 5, after "webs" insert —*to expose said bosses.* Line 7 after "slot" insert —*lying on a line extending from*—.

Cancel Claims 1, and 11 to 22 inclusive.

[fol. 2109] Add the following claims:

[23.]* 3. An internal combustion engine piston comprising a head having a depending ring flange, webs in-

[*Matter enclosed in brackets struck out in copy.]

tegrally cast to the ring flange and depressed within
G[1] the circumference defined by the ring flange, wrist pin bosses cast in the webs, and curved guide means integrally cast to the webs and provided with a longitudinal slit disposed between the ends of the webs on one side of the piston, the outer surface of the guide means being disposed in a circumference outwardly of the outer surface of the webs and merging into the latter at included angles sufficiently great to permit the removal of a permanent mold part used to form the outer surface of the piston.

(over)

364997—96
I 901

[24.]* 4 In a piston for an internal combustion engine, the combination of a head having a depending circumferential flange provided with ring grooves on the exterior thereof, chordal webs integral with the head and depending therefrom in opposite positions, piston pin bosses, one located in each web opposite each other, a skirt portion cut away from the head to expose the bosses in the webs and provided with curved bearing faces integral with the webs and connected to the ends of the webs opposite each other, each of said bearing faces being separated from the head except for the integral connection through the webs and one of said bearing faces having a substantially vertical slot therein.

[25.]* 5 In a piston for an internal combustion engine, the combination of a head having a depending circumferential flange provided with ring grooves on the exterior thereof, chordal webs integral with the head and depending therefrom in opposite positions, piston pin bosses one located in each web opposite each other, ribs integral with and substantially perpendicular to the webs joining the webs and the head, a skirt portion cut away from the head to expose the bosses in the webs provided with curved bearing faces integral with the webs and connected to
53 the ends of the webs opposite each other, each of said bearing faces being separated from the head except for the integral connection through the webs and one of said bearing faces having a substantially vertical slot therein.

[*Matter enclosed in brackets struck out in copy.]

[fol. 2110] [26.]* 6. In a piston for an internal combustion engine, the combination of a head having a depending circumferential flange provided with ring grooves on the exterior thereof, chordal webs integral with the head and depending therefrom in opposite positions, piston pin bosses, one located in each web opposite each other, ribs integral with and substantially perpendicular to the webs joining the webs, the bosses and the head together, a skirt portion cut away from the head to expose the bosses in the webs and provided with curved bearing faces integral with the webs and connected to the ends of the webs opposite each other, each of said bearing

364997—97
I 902

faces being separated from the head except for the integral connection through the webs and one of said bearing faces having a substantially vertical slot therein.

[27.]* 7 A piston for an internal combustion engine comprising a head portion having a depending ring flange, a skirt portion, said skirt portion comprising a pair of substantially parallel webs carried by the head portion and provided with opposed wrist pin bosses, bearing portions carried by the ends of said webs and separated from the head by air gaps, the laterally outer faces of said web portions being free from laterally overhanging edge portions of the bearing faces, one of said bearing faces being provided with a longitudinal slot disposed intermediate the end portions of said bearing face.

[28.]* 8 In a piston for an internal combustion engine, the combination of a head having a cylindrical ring flange, oppositely disposed webs integral with the flange and carrying diametrically opposite piston pin bosses, a skirt integral with said webs and cut away to expose the sides of said webs and separated from the ring flange by circumferential slits, and provided with a longitudinal slit disposed between the ends of the webs.

[29.]* 9 In a piston for an internal combustion engine, the combination of a head comprising a disc and a peripheral flange having ring grooves therein, a pair of cordal webs connected to the flange of the head by outwardly flaring extensions, oppositely disposed wrist pin bosses in the webs, and a cylindrical skirt cut away to expose the

---

[*Matter enclosed in brackets struck out in copy.]

webs and integrally connected to the ends of the latter, the skirt being separated from the head between the said [fol. 2111] webs by circumferential slits and the skirt having a longitudinally extending slit disposed between the ends of the webs on one side of the piston.

364997—98
I 903

[30.]* **10** In a piston for an internal combustion engine, the combination of a piston head including a depending ring flange, oppositely disposed webs depending from the ring flange and disposed inwardly thereof, wrist pin bosses in the webs, and curved bearing means integrally connected to the webs and separated from the head by air gaps extending circumferentially of the piston between the ends of the webs, the said bearing means having a slit located between the ends of the webs and extending in a direction lengthwise of the piston.

[31.]* **11** In a piston of an internal combustion engine, the combination of a piston head having a cylindrical ring flange depending therefrom, webs integral with the flange extending convergingly inwardly of the piston from the opposite portions of the flange and then lengthwise of the piston in substantially parallel arrangement, wrist pin bosses in the webs, and a skirt joined to the ends of the webs on opposite sides of the bosses and cut away to expose substantially all of the sides of the webs, all the foregoing parts being integrally connected together, there being circumferentially extending air gaps separating the head and skirt between the webs and a slot in one side of the skirt between the ends of the webs and extending in a direction lengthwise of the piston.

[32.]* **12** In a piston for an internal combustion engine, the combination of a piston head comprising a disc with a depending peripheral ring flange, a skirt separated from the head by circumferentially extending air gaps, cordal webs integrally connected at their end to the skirt with their outer surfaces near the points of connection with the skirt diverging outwardly to merge into the outer surfaces of the skirt, wrist pin bosses integrally formed with the webs, and integral connections between the depending flange of the head and the adjacent ends of the webs, said connections extending from the flange inwardly and length-

[* Matter enclosed in brackets struck out in copy.]

wise of the piston and merging into the webs with outwardly [fol. 2112] diverging surfaces, the skirt having a longitudinally extending slit formed on one side thereof between the ends of the webs.

(Sig.)
364997—99
I 904

Respectfuly submitted,
FRANK JARDINE,
By RICHEY & WATTS,
His Attorneys.

REMARKS

The claims constituting the issues of the interferences which were decided adversely to applicant have been canceled and new claims drawn specifically to the patentable subject matter of Applicant's device substituted.

Claims 3 and 6 constituted the issue of interferences No. 49582 and 49589, in which priority was awarded to applicant.

Claims 4, 5, 6, 8, 9, and 10 were, before the declaration of the interferences, rejected as not being patentably distinct from claim 3. Accordingly the subject matter of these claims is believed to be allowable along with claim 3.

Claims 4 and 5 have been amended slightly to further distinguish from claim 3, and it is believed that all of these claims may now be allowed.

New claim 23 includes webs cast integrally with the ring flange and also recites the relation of the thrust members and webs which join at included angles sufficiently great to permit removal of a permanent mold part used in casting the piston. These limitations distinguish from the prior art and from the applications involved in the interferences. Claim 24 is believed to be patentable by reason of the recitation of a skirt portion cut away from the head to expose the bosses in combination with the other elements of applicant's structure. Claim 25 includes in addition the vertical ribs 9 above the piston pin bosses joining the webs to the head. Claim 26 defines these ribs more specifically.

364997—100
I 905

Claim 27 is believed to be patentable by reason of the definition of the webs as having lateral outer faces free from

[fol. 2113] laterally overhanging edge portions of the bearing faces.

Claim 28 is similar to claim 3 but recites in addition that the webs are integral with the ring flange. Claim 29 distinguishes from Claim 6 in the same manner. Each of these claims also defines the longitudinal slit in slightly broader terms than claims 3 and 6.

Claim 30 is drawn along the lines of Claim 11 but distinguishes from the disclosure of the parties involved in the interferences by reciting the webs as depending from the ring flange.

Claims 31 and 32 are drawn more specifically to the structure of applicant's piston which permits its manufacture in permanent molds. Claim 31 states that the webs are integral with the flange and extend convergingly inwardly therefrom and have substantially all of their outer sides exposed. Claim 32 defines the outwardly diverging connections between the webs and the skirt sections and the outwardly diverging connections between the webs and the ring flange.

All of the claims now in the case are believed to be patentably distinct from the prior art and the disclosures of the winning parties in the interferences and are believed to be sufficiently distinguished from each other to warrant their allowance.

Respectfully submitted,
By RICHEY & WATTS,
Applicant's Attorneys.

11CS 364997—101

(Chief Clerk May 8 30 U. S. Patent Office)

U. S. Patent Office
May 8 1930
Division 12, **Paper No. 53**

Applicant	Frank Jardine	
Application	Pistons	
	450,898	Division
Serial No.	[364,997]*	12
Filed	March 9, 1921	
Docket No.	1977	

[*Matter enclosed in brackets struck out in copy.]

[fol. 2114]

Washington, D. C.,
May 8, 1930.

Hon. Commissioner of Patents,
Washington, D. C.

Sir:

Kindly amend the above-entitled application as follows:
Cancel claims 2, 4, 5, 7, 8, 9 and 10.
Cancel the claim submitted in the amendment dated August 7, 1928.

Respectfully submitted,

FRANK JARDINE,
By RICHEY & WATTS,
His Attorneys.

REMARKS

At the interview courteously granted this day by the Examiner to applicant's attorney, claims 2, 4, 5, 7, 8, 9 and 10 were discussed in connection with the Office action of Oct. 5, 1922, and in connection with claims 23-32 inclusive, added by the preceding amendment.

The Examiner held claim 2 to be unpatentable over the issue of Interference No. 49590, involving applicant's claim 1. Accordingly, this claim has been cancelled.

Claims 4, 5, 7, 8, 9, and 10 have been cancelled as not being patentably distinct from Claim 3, and also because it is believed the patentable subject-matter thereof is more clearly defined in new claims 23-32, inclusive.

The claim submitted by the amendment dated Aug.

364997—102

7, 1928, which was not entered, has been cancelled in order to clarify the record.

Respectfully submitted,

By RICHEY & WATTS,
Applicant's Attorneys.

364997—103

[fol. 2115] (Mailed May 9 1930)

181

Div. 12 Serial No. 450,898
CAK:JTE (Renewal)

Address only
The Commissioner of Patents
Washington, D. C.

DEPARTMENT OF COMMERCE
UNITED STATES PATENT OFFICE

Washington May 9, 1930.

Frank Jardine (Assor etc.)

Your APPLICATION for a patent for an IMPROVEMENT in PISTONS filed Mar. 9, 1921 has been examined and ALLOWED with 12 claims.

The final fee, TWENTY DOLLARS, WITH $1 ADDITIONAL FOR EACH CLAIM ALLOWED IN EXCESS OF 20, must be paid not later than SIX MONTHS from the date of this present notice of allowance. If the final fee be not paid within that period, the patent will be withheld, but the application may be renewed within one year after the date of the original notice with a renewal fee of $20 and $1 additional for each claim in excess of 20.

The office delivers patents upon the day of their date, on which date their term begins to run. The preparation of the patent for final signing and sealing will require about four weeks, and such work will not be begun until after payment of the necessary final fee.

When the final fee is paid, there should also be sent, DISTINCTLY AND PLAINLY WRITTEN, the name of the INVENTOR, TITLE OF THE INVENTION, AND SERIAL NUMBER AS ABOVE GIVEN, DATE OF ALLOWANCE (which is the date of this circular), DATE OF FILING, and, if assigned, the NAMES OF THE ASSIGNEES.

If it is desired to have the patent issue to an ASSIGNEE OR ASSIGNEES, an assignment containing a REQUEST to that effect, together with the FEE for recording the same, must be filed in this office on or before the date of payment of the final fee.

After issue of the patent, uncertified copies of the drawings and specifications may be purchased at the price of TEN CENTS EACH. The money should accompany the order. Postage stamps will not be received.

The final fee will NOT be received from other than the applicant, his assignee or attorney, or a party in interest as shown by the records of the Patent Office.

[fol. 2116] NOTICE.—WHEN THE NUMBER OF CLAIMS ALLOWED IS IN EXCESS OF 20, NO SUM LESS THAN $20 PLUS $1 ADDITIONAL FOR EACH CLAIM IN EXCESS OF TWENTY CAN BE ACCEPTED AS THE FINAL FEE.

☞ IN REMITTING THE FINAL FEE GIVE THE SERIAL NUMBER AT THE HEAD OF THIS NOTICE.

☞ UNCERTIFIED CHECKS WILL NOT BE ACCEPTED.

Respectfully,
THOMAS E. ROBERTSON,
Commissioner of Patents.

Richey & Watts,
1983 Union Trust Bldg.,
Cleveland, Ohio.

NOTICE.

Final Fee effective June 1, 1930. $25, with $1.00 additional for each claim in excess of 20.

364997—104

($20 Rec'd May 15 30 C. C. U. S. Patent Office J)

FINAL FEE PAID TO THE COMMISSIONER OF PATENTS

(Be careful to give correct Serial No.)

Serial No. 450,898

INVENTOR:
FRANK JARDINE
PATENT TO BE ISSUED TO
AS PER RECORD (Cleveland Trust Company)
NAME OF INVENTION, AS ALLOWED:
DATE OF PAYMENT:
May 15 1930
FEE:
$20.00.
DATE OF FILING:
March 9, 1921
DATE OF CIRCULAR OF ALLOWANCE:
May 9, 1930

[fol. 2117] The Commissioner of Patents will please apply the accompanying fee as indicated above.

RICHEY & WATTS,
Attorney.

SEND PATENT TO

Messrs. Richey and Watts
Union Trust Bldg.,
Cleveland, Ohio.

Final fees will not be received from other than the applicant, his assignee or attorney, or a party in interest as shown by the records of the Patent Office.

364997—105

(Mailed May 28 1930)

254

CAK:JTS
Paper No. 54

Div. 12 Room 380
Address only
"The Commissioner of Patents,
Washington, D. C."
and not any official by name

All communications respecting this application should give the serial number, date of filing, and name of the applicant

DEPARTMENT OF COMMERCE

UNITED STATES PATENT OFFICE

Washington May 28, 1930.

Please find below a communication from the EXAMINER in charge of this application.

THOMAS E. ROBERTSON,
Commissioner of Patents.

Richey & Watts,
1983 Union Trust Bldg.,
Cleveland, Ohio.

Applicant Frank Jardine
Ser. No. 450,898 (Renewal)
Filed Mar. 9, 1921
For Pistons.

In accordance with the provisions of Order No. 2308, dated March 12, 1917, which reads in part as follows:

* * * * * * *

[fols. 2118-2240] Obvious informalities in the application may be corrected by the examiner, but said correction must be in the form of an amendment, approved by the Principal Examiner in writing, placed in the file, and made a part of the record. The changes specified in the amendment will be entered by the clerk in the regular way.

* * * * * * *

the changes, hereinafter specified, are made by the examiner in the application above identified.

Should these changes not be satisfactory to the applicant, appropriate amendment may be proposed under the provisions of Rule 78, provided the specification has not been printed.

The application has been amended as follows:

I

Claim 2, line 3, "*chordal*" has been substituted for "cordal."

C. C. HENRY,
Examiner.
364997—106

* * * * * * *

[fol. 2241] **DEFENDANTS' EXHIBIT 4-X**

List of Patents Owned by The Cleveland Trust Company under Trust

(Filed January 27, 1934)

December 10, 1932.

PISTON PATENTS OWNED BY PISTON TRUST ESTATE

	Pat. No.	Issued	Ser. No.
E. O. Spillman & L. P. Mooers	1,092,870	4/14/14	779,757 (Expired)
G. E. Franquist	1,153,902	9/21/15	854,484 (Expired)
Edward O. Spillman	1,229,540	6/12/17	130,823
Victor E. Schmiedeknecht	1,256,265	2/12/18	180,511
J. G. Vincent	1,279,184	9/17/18	796,647
Howard C. Marmon	1,293,846	2/11/19	108,274
Robert B. Wasson	1,320,188	10/28/19	82,601
Harold D. Church	1,327,147	1/ 6/20	96,880
E. E. Allyne	1,329,820	2/ 3/20	115,887
J. H. Bamberg	1,329,821	2/ 3/20	106,513
F. A. Parkhurst	1,329,822	2/ 3/20	110,844

	Pat. No.	Issued	Ser. No.
F. A. Parkhurst	1,329,823	2/ 3/20	259,596
Louis P. Mooers	1,347,819	7/27/20	333,111
J. E. Diamond	1,357,851	11/ 2/20	117,894
Charles A. Marien	1,371,320	3/15/21	302,904
Edward J. Gulick	1,387,538	8/16/21	307,527
Charles A. Marien	1,388,279	8/23/21	420,360
Louis P. Mooers	1,402,308	1/ 3/22	390,623
Louis P. Mooers	1,402,309	1/ 3/22	172,380
Montague Stanley Napier	1,403,560	1/17/22	418,959
[fol. 2242]			
William Guy Berry et al	1,408,066	2/28/22	478,195
Edmund E. Allyne	1,426,138	8/15/22	270,318
F. A. Parkhurst	1,440,549	1/ 2/23	409,304
Roland M. Howdeshell	Re-12,273	2/23/26	51,529
(Original Pat.	1,473,233		383,519)
Harry J. Hater	1,485,078	2/26/24	556,234
James M. Howe	1,494,483	5/20/24	466,415
Laurence Henry Pomeroy	1,499,073	6/24/24	321,696
Montague Napier	1,525,316	2/ 3/25	419,715
William G. Berry et al	1,551,233	8/25/25	410,264
Harry J. Hater	1,563,025	11/24/25	676,344
Frank Jardine	1,563,194	11/24/25	47,213
Jardine & Jehle	1,580,491	4/13/26	466,371
Allen B. Norton	1,633,187	6/21/27	80,902
George D. Welty	1,638,898	8/16/27	39,676
Howard E. Maynard (½ Int.)	1,655,968	1/10/28	434,467
Harry J. Hater	1,656,482	1/17/28	588,473
Gustav R. Kelm	1,659,881	2/21/28	470,502
Stephen D. Hartog	1,675,174	6/26/28	53,063
James Edward Diamond	1,695,417	12/18/28	561,997
Harold J. Ness	1,699,621	1/22/29	100,496
Harold J. Ness	1,699,621	1/22/29	100,497
Frank Jardine	1,727,647	9/10/29	100,773
Frank Jardine	1,730,120	10/ 1/29	100,772
Stephen D. Hartog	1,730,885	10/ 8/29	201,169
Stephen D. Hartog	1,732,361	10/22/29	227,705
Jeffries & Archer	1,732,557	10/22/29	707,868
Frank Jardine	1,741,843	12/31/29	47,234
Wm. C. McCoy	1,757,131	5/ 6/30	234,398
Jehle & Jardine	1,758,444	5/13/30	544,487
Frank Jardine	1,759,508	5/20/30	137,194
Wm. C. McCoy	1,761,140	6/ 3/30	133,909
Wm. C. McCoy	1,761,141	6/ 3/30	143,878
Wm. C. McCoy	1,761,142	6/ 3/30	331,513
Frank Jardine	1,763,523	6/10/30	364,997
(Renewal of Ser. No.	450,898)		
Harry J. Hater	1,764,871	6/17/30	291,427
Frank J. Kent	1,768,608	7/ 1/30	201,650
Harry J. Hater	1,769,835	7/ 1/30	188,736
George D. Welty	1,775,446	9/ 9/30	128,764
Frank Jardine	1,784,291	12/ 9/30	100,771
Stephen D. Hartog	1,794,767	3/ 3/31	467,587
Wm. C. McCoy	1,802,180	4/21/31	400,476
Melbourne A. Beckmann	1,768,815	7/ 1/30	369,130
Melbourne A. Beckmann	1,768,816	7/ 1/30	369,131
Stephen D. Hartog	1,812,696	6/30/31	326,832
Edward J. Gulick	1,815,733	7/21/31	204,661
Martin B. Covert	1,818,307	8/11/31	442,989
Frank Jardine	1,819,998	8/18/31	340,088
Harry J. Hater	Re-18,178	9/ 8/31	274,321
(Original Pat. No.	1,656,482)		
William C. McCoy	1,825,750	10/ 6/31	143,879
G. E. Franquist	1,826,171	10/ 6/31	563,782
Louis P. Mooers	1,826,185	10/ 6/31	649,481

	Pat. No.	Issued	Ser. No.
William C. McCoy	1,830,519	11/ 3/31	451,655
Frank Jardine et al	1,835,874	12/ 8/31	79,651
Frank Jardine et al	1,835,875	12/ 8/31	174,202
Stephen D. Hartog	1,842,022	1/19/32	359,137
Stephen D. Hartog	1,842,023	1/19/32	611,959
Frank Jardine	1,847,947	3/ 1/32	312,429
Allen B. Norton	1,853,450	4/12/32	51,748
Gustave E. Franquist	1,872,724	8/23/32	531,962
James E. Diamond	1,874,925	8/30/32	126,110

[fol. 2243] **DEFENDANTS' EXHIBIT 4-Y**

Bill of Complaint and Answer in Case No. 27-32 in the U. S. District Court for the Southern District of New York, The Cleveland Trust Company vs. The National Piston Company, Inc.

(Filed January 27, 1934)

UNITED STATES OF AMERICA,
SOUTHERN DISTRICT OF NEW YORK, ss:

I, CHARLES WEISER, Clerk of the District Court of the United States for the Southern District of New York do hereby certify that the writings annexed to this certificate have been compared with their originals on file and remaining of record in this office; that they are correct transcripts therefrom and of the whole of the said originals.

IN TESTIMONY WHEREOF I have hereunto subscribed my name and affixed the seal of the said Court at the City of New York, in the Southern District of New York, this 27th day of January in the year of our Lord one thousand nine hundred and thirty-three and of the Independence of the United States the One Hundred and fifty-seventh.

CHARLES WEISER,
Clerk.

(Seal)

IN THE UNITED STATES DISTRICT COURT

IN AND FOR THE SOUTHERN DISTRICT OF NEW YORK

THE CLEVELAND TRUST COMPANY,
Plaintiff,

vs.

THE NATIONAL PISTON COMPANY, INCORPORATED,
Defendant.

IN EQUITY No. 27-32

BILL OF COMPLAINT.

* * * * * * *

[fol. 2244] IV.

That heretofore and before the 18th day of July, 1913, Edward O. Spillman and Louis P. Mooers, citizens of the United States, residing in the County of Niagara, State of New York, were the original, first and joint inventors of certain new and useful imrpovements in Pistons for Explosion Engines or Motors, fully described in Letters Patent of the United States No. 1,092,870, hereinafter mentioned, which invention or improvement was not known or used by [fol. 2245] others in this country, or patented or described in any printed publication in this or any foreign country, prior to their invention thereof, or more than two years prior to their application for said Letters Patent, and had not been in public use or on sale in this country for more than two years prior to said application, and had not been abandoned to the public, and not not been patented or caused to be patented by them or their legal representatives or assigns in any foreign country upon an application filed more than twelve months prior to the filing of their application for Letters Patent of the United States therefor; that the said Edward O. Spillman and Louis P. Mooers made due application to the Commissioner of Patents of the United States in accordance with the then existing acts of Congress, for Letters Patent of the United States for said invention or improvement, and having in all respects complied with the conditions and requisitions of said acts of Congress, on the 14th day of April, 1914, Letters Patent of the United States No. 1,092,870, signed, sealed and executed in due form of law for the said invention or improvement were issued and delivered unto said Edward O. Spillman and Louis P. Mooers, whereby there was secured unto them, their successors and assigns for the term of seventeen years from the said 14th day of April, 1914, the sole and exclusive right to make, use and sell to others to be used, throughout the United States and the territories thereof the aforesaid invention or improvement, all as by said Letters Patent, or a duly authenticated copy thereof in Court to be produced and shown unto your Honors, will more fully and at large appear.

V.

That subsequent to the granting of the aforesaid Letters Patent The Herschel-Spillman Company, a corporation of the State of New York, acquired an interest in said invention and Letters Patent from the said Edward O. Spillman, and that thereafter and on or about the 16th day of June, 1916, the said Edward O. Spillman and the said The Herschel-Spillman Company, by an instrument in writing duly executed and delivered and duly recorded in the Patent Office of the United States, in Liber R-101, page 1 of the Transfers of Patents, assigned, and transferred an undivided one-half of the entire right, title and interest in and to said Letters Patent No. 1,092,870 to one George B. Pitts; [fols. 2246-2248] and that thereafter and on or about the 3rd day of July, 1919, the said George B. Pitts by an instrument in writing assigned said undivided one-half of the entire right, title and interest in, to and under said Letters Patent No. 1,092,870, to your Orator, The Cleveland Trust Company, which assignment was duly recorded on the 28th day of July, 1919, in Liber Q-107, page 336 of the Transfers of Patents; and that the said Louis P. Mooers on the 10th day of July, 1919, by an instrument in writing assigned an undivided one-half of the entire right, title and interest in, to and under said Letters Patent No. 1,092,870 to your Orator, The Cleveland Trust Company, which assignment was duly recorded on the 28th day of July, 1919, in Liber, Q-107, page 339 of the Transfers of Patents; whereby your Orator became vested with and holds the entire right, title and interest in, to and under said Letters Patent No. 1,092,870, as will more fully and at large appear upon production in Court of the assignments aforesaid.

* * * * * * *

[fol. 2249] X

That heretofore and before the 2nd day of June, 1917, Louis P. Mooers, a citizen of the United States, residing at Cincinnati, Hamilton County, State of Ohio, was the original, first and true inventor of certain new and useful improvements in Pistons for Internal Combustion Motors, fully described in Letters Patent of the United States No. 1,402,309, hereinafter mentioned, which invention or improvement was not known or used by others in this country,

or patented or described in any printed publication in this or any foreign country, prior to his invention thereof, or more than two years prior to his application for said Letters Patent, had not been in public use or on sale in this country for more than two years prior to said application; had not been abandoned to the public, and had not been patented or caused to be patented by him or his legal representatives or assigns in any foreign country upon an application filed more than twelve months prior to the filing of his application for Letters Patent of the United States, therefor; that the said Louis P. Mooers made due application to the Commissioner of Patents of the United States in accordance with the then existing acts of Congress, for Letters Patent of the United States for said invention and improvement and by an instrument in writing duly executed and delivered by him and duly recorded in the Patent Office of the United States in Liber P-103 page 133 of the Transfers of Patents, assigned an undivided one half of the entire right, title and interest in and to said invention and improvement and in and to said application for Letters Patent to George B. Pitts of Cleveland, Ohio, and au- [fol. 2250] thorized and requested the Commissioner of Patents to issue the Letters Patent upon said application and for said invention and improvement to said George B. Pitts and Louis P. Mooers; and thereafter, by instruments in writing duly executed and delivered and duly recorded in the Patent Office of the United States, the said George B. Pitts and Louis P. Mooers assigned and transferred unto your Orator, The Cleveland Trust Company, the entire right, title and interest in and to said invention and application for Letters Patent, and authorized and requested the Commissioner of Patents to issue the Letters Patent upon said application and for said invention to said The Cleveland Trust Company, pursuant to which said assignment the aforesaid Letters Patent No. 1,402,309, signed, sealed and executed in due form of law, for the said invention and improvement, were issued and delivered unto your Orator, The Cleveland Trust Company, on the 3rd day of January, 1922, whereby there was secured unto your Orator and its successors and assigns, for the term of seventeen years from the said 3rd day of January, 1922, the sole and exclusive right to make, use and sell to others to be used, throughout the United States and the territories thereof,

the aforesaid invention and improvement, all as by said Letters Patent or a duly authenticated copy thereof, in court to be produced and shown unto your Honors, will more fully and at large appear.

XI

And your Orator further avers and shows unto your Honors that the said defendant, The National Piston Company, Incorporated, as your Orator is informed and believes, having due and timely notice of said Letters Patent of the United States, and each of them, and well knowing the premises and the exclusive rights and privileges as aforesaid secured to your Orator by the said Letters Patent, but contriving and planning to injure your Orator and deprive it of the profits, benefits and advantages which would have otherwise accrued to your Orator from the said Letters Patent, has been since the grant of each of the Letters Patent aforesaid, and still is in the said Southern District of New York, unlawfully, wrongfully, and without license or permission of your Orator, manufacturing or causing to be manufactured, using and selling Pistons constructed according to and containing the aforesaid inventions, discoveries or improvements patented by said Letters Patent in [fol. 2251] violation and infringement of the aforesaid exclusive rights and privileges of your Orator, and has threatened to continue such infringing acts by making, using and selling Pistons in violation and infringement of your Orator's exclusive rights and privileges under said Letters Patent and to your Orator's great and irreparable loss and damage and contrary to equity and good conscience and to the manifest injury of your Orator in the premises.

* * * * * * *

[fols. 2252-2258] THE CLEVELAND TRUST COMPANY,
By F. H. HOBSON,
Vice-President.

Attest:
A. J. PERFLER,
Ass't Trust Officer.
ROUNDS, SCHURMAN & DWIGHT,
Solicitors for Complainant.
EDWARD RECTOR,
Of Counsel.

* * * * * * *

[fol. 2259] IN THE UNITED STATES DISTRICT COURT
SOUTHERN DISTRICT OF NEW YORK

In Equity No. 27-32

THE CLEVELAND TRUST COMPANY

vs.

THE NATIONAL PISTON COMPANY, INC.

Final Decree

This cause having come on to be heard at this term upon the consent of the parties to the entry of this decree and thereupon in consideration thereof, it is ordered, adjudged and decreed as follows:

First: That Letters Patent to Edward O. Spillman and Louis P. Mooers, No. 1,092,870, April 14th, 1914 for Pistons for Explosion Engines or Motors is good and valid in law;

Second: That the said Edward O. Spillman and Louis P. Mooers are the true and original inventors of the invention and improvements described and claimed in said Letters Patent;

Third: That Letters Patent to Jesse G. Vincent No. 1,279,184, Sept. 17, 1918, for Pistons is good and valid in law;

Fourth: That the said Jesse G. Vincent is the true and original inventor of the inventions and improvements described in said Letters Patent;

Fifth: That Letters Patent to Harold D. Church, No. 1,327,147, Jan. 6th, 1920, for Hydro-Carbon Motor is good and valid in law;

Sixth: That the said Harold D. Church is the true and original inventor of the inventions and improvements described in said Letters Patent;

Seventh: That Letters Patent to Louis P. Mooers, No. 1,402,309, Jan. 3rd, 1922, for Pistons for Internal Combustion Motors is good and valid in law;

Eighth: That the said Louis P. Mooers is the true and original inventor of the inventions and improvements described in said Letters Patent;

[fol. 2260] Ninth: That the said The Cleveland Trust Company, the Plaintiff, is the lawful owner of said patents and each of them;

Tenth: That the Defendant has infringed upon the said Letters Patent, and each of them, and upon the exclusive rights of the Plaintiff under the same by the manufacture, use and sale of Pistons.

Eleventh: Accounting having been waived, no accounting is ordered.

Twelfth: That a perpetual injunction issue out of and under the seal of this court directed to the said Defendant, its associates, directors, officers, attorneys, clerks, agents, servants, workmen and others employed enjoining and restricting them and each of them, from directly or indirectly making or causing to be made, using or causing to be used or vending to others to be used in any manner, any article, device, apparatus or piston containing, embodying or employing the said inventions or improvements, or any of them covered by the said Letters Patent, or of any piston capable of or adapted to be used in infringement of said patents, or either of them, or from infringing upon or violating the said Letters Patent or either of them in any way whatsoever without the license of the owner or owners present or future of said patents.

Thirteenth: No costs are taxed.

Fourteenth: The parties having waived appeal, no petition for appeal will be entertained and no order for appeal will be allowed.

F. A. Winslow, United States District Judge.

We consent to the entry of the above decree.

Edward R. Alexander, Counsel for Plaintiff. Gifford & Scull, counsel for defendant.

[fol. 2261] **DEFENDANTS' EXHIBIT 4-Z**

Bill of Complaint in Case No. 535 in the United States District Court for the Eastern District of Michigan, The Cleveland Trust Company vs. E. C. Long Piston Company and E. C. Long.

(Filed January 27, 1934)

IN THE UNITED STATES DISTRICT COURT IN AND FOR THE EASTERN DISTRICT OF MICHIGAN

In Equity. No. 535

THE CLEVELAND TRUST COMPANY, Plaintiff

vs.

E. C. LONG PISTON COMPANY AND E. C. LONG, Defendants

BILL OF COMPLAINT

To the Honorable Judges of the United States District Court for the Eastern District of Michigan:

The Cleveland Trust Company, a corporation organized and exising under and by virtue of the laws of the State of Ohio, and having its principal office and place of business at Cleveland in said State, brings this bill of complaint against E. C. Long Piston Company, a corporation organized and existing under and by virtue of the laws of the State of Michigan, and E. C. Long, a resident of Detroit, Michigan and a citizen of said State, both having a regular, established and joint place of business at Detroit in the State of Michigan, within the aforesaid Eastern District of Michigan, and thereupon your Orator complains and says:

I

That your Orator, The Cleveland Trust Company, is a corporation duly organized and existing under and by virtue of the laws of the State of Ohio, and has its principal office and place of business in Cleveland in said State.

II

That the defendant, E. C. Long Piston Company, is a corporation duly organized and existing under and by virtue [fol. 2262] of the laws of the State of Michigan, and the defendant, E. C. Long, is a resident and citizen of the State of Michigan, and both have a regular, established and joint place of business and principal office at Detroit in the State of Michigan, within the aforesaid Eastern Judicial District of Michigan, where they, and each of them, have committed the acts of infringement hereinafter set forth.

III

That the jurisdiction of the Court in this cause is based upon the fact that the suit is one touching patent rights, and is brought to restrain infringement of certain Letters Patent owned by the plaintiff, and for an accounting of profits and damages arising from past infringement of said Letters Patent by the defendants.

IV

That heretofore and before the 18th day of July, 1913, Edward O. Spillman and Louis P. Mooers, citizens of the United States, residing in the County of Niagara, State of New York, were the original, first and joint inventors of certain new and useful improvements in Pistons for Explosion Engines or Motors, fully described in Letters Patent of the United States No. 1,092,870, hereinafter mentioned, which invention or improvement was not known or used by others in this country, or patented or described in any printed publication in this or any foreign country, prior to their invention thereof, or more than two years prior to their application for said Letters Patent, and had not been in public use or on sale in this country for more than two years prior to said application, and had not been abandoned to the public, and had not been patented or caused to be patented by them or their legal representatives or assigns in any foreign country upon an application filed more than twelve months prior to the filing of their applications for Letters Patent of the United States therefor; that the said Edward O. Spillman and Louis P. Mooers made due application to the Commissioner of Patents of the United States in accordance with the then exist-

ing acts of Congress, for Letters Patent of the United States for said invention or improvement, and having in all respects complied with the conditions and requisitions of said acts of Congress, on the 14th day of April, 1914, Letters Patent of the United States No. 1,092,870, signed, [fol. 2263] sealed and executed in due form of law, for the said invention or improvement were issued and delivered upto said Edward O. Spillman and Louis P. Mooers, whereby there was secured unto them, their successors and assigns for the term of seventeen years from the said 14th day of April, 1914, the sole and exclusive right to make, use and sell to others to be used, throughout the United States and the territories thereof the aforesaid invention or improvement, all as by said Letters Patent, or a duly authenticated copy thereof in Court to be produced and shown unto your Honor, will more fully and at large appear.

V

That subsequent to the granting of the aforesaid Letters Patent, namely, on or about the 16th day of June, 1916, by an instrument in writing, one George B. Pitts acquired from said Edward O. Spillman and The Herschel Spillman Company, a corporation of the State of New York, the undivided one half of the entire right and interest in, to and under said Letters Patent of the United States No. 1,092,870, said assignment having been duly recorded on the 5th day of September, 1916 in Liber R-101, page 1 of the Transfers of Patents; that thereafter and on or about the 3rd day of July, 1919 the said George B. Pitts by an instrument in writing assigned said undivided one half of the entire right, title and interest in, to and under said Letters Patent No. 1,092,870, to your Orator, The Cleveland Trust Company, which assignment was duly recorded on the 28th day of July, 1919 in Liber Q-107, page 336 of the Transfers of Patents; and that the said Louis P. Mooers on the 10th day of July, 1919, by an instrument in writing assigned the undivided one half of the entire right, title and interest in, to and under said Letters Patent No. 1,092,870 to your Orator, The Cleveland Trust Company, which assignment was duly recorded on the 28th day of July, 1919, in Liber Q-107, page 339 of the Transfers of Patents; whereby your Orator became vested with and holds the entire right, title and interest in, to and under

said Letters Patent No. 1,092,870, as will more fully and at large appear upon production in Court of the assignments aforesaid.

[fol. 2264] VI

That heretofore and before the 22nd day of October, 1913, Jesse G. Vincent, a citizen of the United States, and resident of Detroit, Wayne County, State of Michigan, was the original, first and true inventor of certain new and useful improvements in Pistons, fully described in Letters Patent of the United States No. 1,279,184, hereinafter mentioned, which invention or improvement was not known or used by others in this country, or patented or described in any printed publication in this or any foreign country, prior to his invention thereof, or more than two years prior to his application for said Letters Patent; had not been in public use or on sale in this country for more than two years prior to said application; had not been abandoned to the public, and had not been patented or caused to be patented by him or his legal representatives or assigns in any foreign country upon an application filed more than twelve months prior to the filing of his application for Letters Patent of the United States therefor; that the said Jesse G. Vincent made due application to the Commissioner of Patents of the United States in acordance with the then existing acts of Congress, for Letters Patent of the United States for said invention and improvement, and by an instrument in writing duly executed and delivered by him, and duly recorded in the Patent Office of the United States, assigned and transferred the entire right, title and interest in and to said invention and improvement and in and to said application for Letters Patent, to Packard Motor Car Company, a corporation organized and existing under the laws of the State of Michigan, and authorized and requested the Commissioner of Patents to issue the Letters Patent upon said application and for the said invention and improvement to the said Packard Motor Car Company, and having in all respects complied with the conditions and requisitions of said acts of Congress, on the 17th day of September, 1918, Letters Patent of the United States No. 1,279,184, signed, sealed and executed in due form of law for the said invention and improvement were issued and delivered unto said Packard Motor Car Company, as assignee of the said Jesse G. Vincent, whereby there was

secured unto said Packard Motor Car Company, and its successors and assigns for the term of seventeen years from the said 17th day of September, 1918, the sole and exclusive right to make, use and vend to others to be used, throughout the United States and the territories [fol. 2265] thereof, the aforesaid invention and improvement; all as by said Letters Patent, or a duly authenticated copy thereof in Court to be produced and shown unto your Honors, will more fully and at large appear.

VII

That subsequent to the granting of the aforesaid Letters Patent, namely on or about the 11th day of September, 1922, by an instrument in writing said Packard Motor Car Company assigned the entire right, title and interest in, to and under said Letters Patent of the United States No. 1,279,184 to your Orator, The Cleveland Trust Company, which assignment was duly recorded on the 18th day of September, 1922, in Liber W-117 page 44 of the Transfers of Patents; whereby your Orator became vested with and holds the entire right, title and interest in, to and under said Letters Patent No. 1,279,184; as will more fully and at large appear upon production in Court of the assignment aforesaid.

VIII

That heretofore and before the 11th day of May, 1916, Harold D. Church, a citizen of the United States and a resident of Detroit, Wayne County, State of Michigan, was the original, first and true inventor of certain new and useful improvements in Hydro-Carbon Motor, fully described in Letters Patent of the United States No. 1,327,147, hereinafter mentioned, which invention or improvement was not known or used by others in this country, or patented or described in any printed publication in this or any foreign country, prior to his invention thereof, or more than two years prior to his application for said Letters Patent, and had not been in public use or on sale in this country for more than two years prior to said application; had not been abandoned to the public; and had not been patented or caused to be patented by him or his legal representatives or assigns in any foreign country upon an application filed more than twelve months prior to the filing of his application for Letters Patent in the United States therefor; that

the said Harold D. Church made due application to the Commissioner of Patents of the United States in accordance with the then existing Acts of Congress, for Letters Patent of the United States for said invention and improvement, and by an instrument in writing duly executed and de- [fol. 2266] livered by him, and duly recorded in the Patent Office of the United States, assigned and transferred the entire right, title and interest in and to said invention and improvement and in and to said application for Letters Patent to Packard Motor Car Company, a corporation organized and existing under the laws of the State of Michigan, and authorized and requested the Commissioner of Patents to issue the Letters Patent upon said application and for said invention and improvement to the said Packard Motor Car Company, and having in all respects complied with the conditions and requisitions of said Acts of Congress, on the 6th day of January, 1920 Letters Patent of the United States No. 1,327,147, signed, sealed and executed in due form of law for the said invention and improvement were issued and delivered unto said Packard Motor Car Company, as assignee of said Harold D. Church, whereby there was secured unto said Packard Motor Car Company and its successors and assigns for the term of seventeen years from the 6th day of January, 1920, the sole and exclusive right to make, use and vend to others to use throughout the United States and the territories thereof, the aforesaid invention and improvement; all as by said Letters Patent, or a duly authenticated copy thereof in Court to be produced and shown unto your Honors will more fully and at large appear.

IX

That subsequent to the granting of the aforesaid Letters Patent, namely on or about the 11th day of September, 1922, by an instrument in writing, said Packard Motor Car Company assigned the entire right, title and interest in, to and under said Letters Patent of the United States No. 1,327,147 to your Orator, The Cleveland Trust Company, which assignment was duly recorded on the 18th day of September, 1922, in Liber C-117 page 64 of the Transfers of Patents; whereby your Orator became vested with and holds the entire right, title and interest in, to and under said Letters Patent No. 1,327,147, as will more fully and at

large appear upon production in Court of the assignment aforesaid.

X

That heretofore and before the 2nd day of June, 1917, Louis P. Mooers, a citizen of the United States, residing at Cincinnati, Hamilton County, State of Ohio, was the [fol. 2267] original, first and true inventor of certain new and useful improvements in Pistons for Internal Combustion Motors, fully described in Letters Patent of the United States No. 1,402,309, hereinafter mentioned, which invention or improvement was not known or used by others in this country, or patented or described in any printed publication in this or any foreign country, prior to his invention thereof, or more than two years prior to his application for said Letters Patent; had not been in public use or on sale in this country for more than two years prior to said application; had not been abandoned to the public, and had not been patented or caused to be patented by him or his legal representatives or assigns in any foreign country upon an application filed more than twelve months prior to the filing of his application for Letters Patent of the United States therefor; that the said Louis P. Mooers made due application to the Commissioner of Patents of the United States in accordance with the then existing acts of Congress, for Letters Patent of the United States for said invention and improvement and by an instrument in writing duly executed and delivered by him and duly recorded in the Patent Office of the United States in Liber P-103, page 133 of the Transfers of Patent, assigned and undivided half of the entire right, title and interest in, and to said invention and improvement and in and to said application for Letters Patent to George B. Pitts of Cleveland, Ohio, and authorized and requested the Commissioner of Patents to issue the Letters Patent upon said application and for said invention and improvement to said George B. Pitts and Louis P. Mooers; and by said instruments in writing specified in Article V of this bill as recorded in Liber Q-107, pages 338 and 339 of the Transfer of Patents, said George B. Pitts and Louis P. Mooers, respectively, each assigned an undivided one-half of the entire right, title and interest in, to and under said Letters Patent of the United States No. 1,402,309 to your Orator, The Cleveland Trust Company, and authorized and requested the

Commissioner of Patents to issue the Letters Patent upon said application and for said invention and improvement to said The Cleveland Trust Company, whereby your Orator became vested with and holds the entire right, title and interest in, to and under said Letters Patent No. 1,402,309, as will more fully and at large appear upon production in Court of the said Letters Patent and the assignments aforesaid.

[fol. 2268] XI

And your Orator further avers and shows unto your Honors that the said defendants, E. C. Long Piston Company and E. C. Long, as your Orator is informed and believes, having due and timely notice of said Letters Patent of the United States, and each of them, and well knowing the premises and the exclusive rights and privileges as aforesaid secured to your Orator by the said Letters Patent, but contriving and planning to injure your Orator and deprive it of the profits, benefits, and advantages which would have otherwise accrued to your Orator from the said Letters Patent have been since the grant of each of the Letters Patent aforesaid, and still are in the said Eastern District of Michigan, unlawfully, wrongfully, and without license or permission of your Orator, manufacturing, or causing to be manufactured, using and selling Pistons constructed according to and containing the aforesaid inventions, discoveries or improvements patented by said Letters Patent in violation and infringement of the aforesaid exclusive rights and privileges of your Orator, and have threatened to continue such infringing acts by making, using and selling Pistons in violation and infringement of your Orator's exclusive rights and privileges under said Letters Patent and to your Orator's great and irreparable loss and damage and contrary to equity and good conscience and to the manifest injury of your Orator in the premises.

XII

That your Orator has caused notice to be given to the defendants, and each of them, of this aforesaid infringement of said Letters Patent, and each of them, and of the rights of your Orator in the premises, and requested the defendants, and each of them, to desist from such infringement; but that they and each of them have disregarded

said notice and request and are continuing such infringement of said Letters Patent as aforesaid;

And forasmuch as your Orator can have no adequate relief except in this Court, and to the end therefor that the defendants may, if they can, show cause why your Orator should not have the relief hereinafter prayed, and may make full disclosure of all the matters aforesaid, your Orator prays

1. That the said defendants, E. C. Long Piston Company and E. C. Long, may be required to appear and make full, true, direct and perfect answer to the matters heretofore [fol. 2269] stated and charged, but not under oath, answer under oath being hereby expressly waived.

2. That the said defendants, E. C. Long Piston Company and E. C. Long, may be compelled to account for and pay over to your Orator the gains and profits which they, and each of them, have made and received, or shall have made and received, from said violation of your Orator's rights and from said infringement of the aforesaid Letters Patent, and each of them, and that your Honors may assess or cause to be assessed under your direction, in addition to the gains and profits to be accounted for by the defendants, the damages your Orator has sustained by reason of said infringement, and that your Honors may increase the actual damages to a sum equal to three times the amount of said assessment under the circumstances of the willful and unjust infringement of your Orator's Letters Patent by the said defendants as aforesaid.

3. That your Honors may grant unto your Orator a preliminary and also a perpetual writ of injunction, issuing out of and under the seal of this Honorable Court, and directed to the said E. C. Long Piston Company and E. C. Long, and enjoining it and him, and its and his officers, agents, servants, attorneys and workmen, and each of them, from making, using or vending or causing to be made, used or vended, or in any wise counterfeiting or imitating the inventions and improvements described and claimed in the aforesaid Letters Patent, or any part thereof, and from making, using or vending to others to be used, or causing to be made, used or vended to others to be used, any Pistons, or any parts thereof, made in accordance with said Letters Patent, or any part thereof, or like or similar to Pistons

and parts thereof which the defendant has heretofore made and vended to others in violation of the rights of your Orator as aforesaid, and from and in any manner infringing said Letters Patent, or any of them, and that the Pistons and parts thereof embodying said patented inventions and improvements, or any part thereof, now in possession of the defendants, or either of them or their agents or representatives, may be destroyed or delivered up to your Orator for that purpose.

4. That the said defendants, E. C. Long Piston Company and E. C. Long, may be decreed to pay the costs of this suit, and that your Orator may have such other and further relief as the equity of the case may require and to your Honors may seem meet.

[fol. 2270] And may it please your Honors to grant unto your Orator a writ of injunction conformable to the prayer of this bill, and also a writ of subpoena of the United States of America, directed to the said E. C. Long Piston Company and E. C. Long, commanding it and him, respectively, to appear and make answer unto this bill of complaint and to abide and conform to such order and decree in the premises as to the Court shall seem meet and be required by the principles of equity and good conscience.

And your Orator will ever pray.

THE CLEVELAND TRUST COMPANY,
By R. A. MALM,
Vice President.

ATTEST:—
A. J. PERFLER,
Asst. Trust Officer.
Solicitor for Complainant.

R. T. SAWYER,
Of Counsel.

STATE OF OHIO,
COUNTY OF CUYAHOGA, ss.

On this 6th day of April, 1923, before the undersigned a Notary Public within and for the County and State aforesaid, personally appeared R. A. MALM and made oath that he

is the Vice President of The Cleveland Trust Company, the above named complainant, that he has read the foregoing Bill of Complaint, and knows the contents thereof and that the same is true, except as to those matters stated on information and belief, and as to those matters he believes it to be true.

(Notarial Seal) .....

Notary Public.

(Here follows 1 photolithograph, side folios 2271-2278)

864A

FILED
JAN 27 1934
O'Brien M.
F. J. DENZLER Clerk
U. S. District Court N. D. O.

30

Def 50

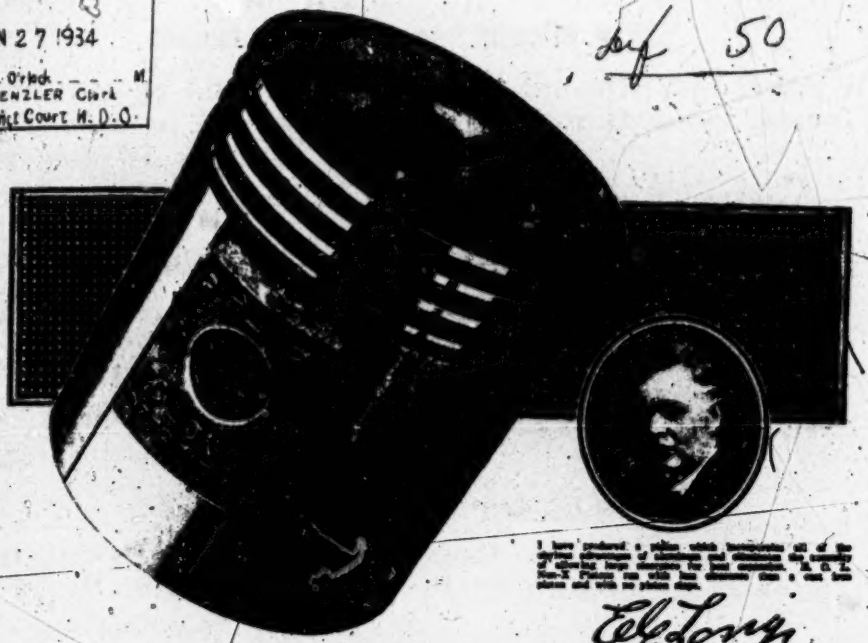

I have produced a piston which incorporates all of the various advantages of aluminum and eliminates all examples of offering here obtained by last automobile. E. C. L. Non-X Pistons are built less clearance than a cast iron piston and with no piston slap.

Ed Long

Runs With Less Clearance Than Cast Iron Pistons—

—with no slaps

MANY of America's foremost car manufacturers have adopted E. C. L. non-expanding aluminum alloy pistons as regular equipment because they run with less clearance than cast iron pistons and consequently reduce the amount of "Slap" and noise about the motor.

E. C. L. Non-X Pistons greatly reduce the consumption of gas and oil and increase the power and speed of the motor. They run cooler, reduce vibration and wear on bearings and lessen spark knocks.

E. C. L. Non-X Pistons are especially die-cast from light-weight Aluminum Alloy. They may be fitted quickly and easily to any motor—with but very little clearance. The piston is designed with slots which permit room for heat expansion in the lower part of the piston. The piston lands are machined slightly smaller than the skirt of the piston to take care of the excessive expansion in the head, which does not interfere with the running fit of the skirt. This insures a perfect fit at all times.

Install a set of E. C. L. Non-X Pistons in your next overhaul job and note how smoothly the motor runs—how quietly—and economically. Note the reduction in vibration and the elimination of the so-called "piston slap." Start the motor, cold and see how noiselessly it runs and how quickly it accelerates. These are all factors which will appeal to every motorist—especially those who are driving last year's cars or the year before. And you can capitalize this factor to your lasting profit—

E. C. L. Non-X Pistons are carried in stock for standard and oversizes for practically all makes of motors.

We will gladly tell you more about the profit-making opportunities with E. C. L. Non-X Pistons. Write us at once for complete information.

E. C. LONG
MAIN OFFICE AND FACTORY
4834 Beaubien Street, Detroit, Mich.

E-C-L Pistons

ON EXPANDING

DEFENDANTS' EXHIBIT 5-C.
Page 250 of "Motor World" for December 28, 1933.
(Filed January 27, 1934.) 172/

2271-2278

BLANK PAGE

[fol. 2279] **DEFENDANTS' EXHIBITS 5-H$_1$ to 5-H$_3$.**

Digest of Defendants' Exhibit 5-H$_1$.

(Decision of Law Examiner in the United States Patent Office, dated May 23, 1921, in Hartog v. Pomeroy Interference No. 45,351.)

Decision denies Motion to Dissolve brought by Pomeroy.

Digest of Defendants' Exhibit 5-H$_2$.

(Decision of Examiner of Interferences in the United States Patent Office, dated February 17, 1922, in Hartog v. Pomeroy Interference No. 45,351.)

Decision awards priority of invention of the subject matter in issue to Pomeroy.

Digest of Defendants' Exhibit 5-H$_3$.

(Decision of the Board of Appeals in the United States Patent Office, dated August 10, 1922, Hartog v. Pomeroy Interference No. 45,351.)

This decision reverses the decision of the Examiner of Interferences on the question of priority and awards priority of invention to Hartog.

[fol. 2280] **DEFENDANTS' EXHIBIT 5-I**

Digest of Defendants' Exhibit 5-I

(Includes Items from Exhibits Identified as V-1, V-2 and V-4)

EXHIBIT V-1—CASH DISBURSEMENTS

1919			
November	10—	Walker M. Levitt Co.	$164.03
November	19—	Walker M. Levitt Co.	67.50
November	28—	Walker M. Levitt Co.	316.33
December	6—	Walker M. Levitt Co.	243.13
December	6—	E. C. Long—Royalties for sale pistons	27.40
December	8—	Walker M. Levitt Co.	31.56
December	12—	Walker M. Levitt Co.	76.61
December	18—	E. C. Long—for moneys received on F. Motor Car Co., Chic.	720.07

1920			
January	6—	E. C. Long—Royalties	$24.00
January	10—	Walker M. Levitt Co.	57.04
January	15—	Walker M. Levitt Co.	80.33
January	19—	E. C. Long	49.92
January	22—	E. C. Long	99.49
January	22—	Walker M. Levitt Co.	108.00
January	27—	Walker M. Levitt Co.	101.25
January	29—	Walker M. Levitt Co.	149.51
February	5—	Walker M. Levitt Co.	206.38
February	5—	Walker M. Levitt Co.	199.80
February	7—	E. C. Long—Royalty	80.60
February	9—	Walker M. Levitt Co.	249.42
March	3—	E. C. Long—Royalty	127.80
March	4—	Walker M. Levitt Co.	319.28
March	6—	Walker M. Levitt Co.	668.99
April	9—	E. C. Long	157.60
May	10—	E. C. Long—Royalty	106.40
June	8—	E. C. Long—Royalties	138.40
July	8—	E. C. Long	117.80
August	2—	Walker M. Levitt Co.	1036.13
August	7—	E. C. Long	96.40
Sept.	10—	E. C. Long	151.60
Oct.	8—	Walker M. Levitt Co.	136.54
Oct.	9—	E. C. Long	87.20
October	11—	Walker M. Levitt Co.	100.58
Nov.	10—	E. C. Long	103.40
Dec.	2—	Walker M. Levitt Co.	273.38
Dec.	10—	E. C. Long	69.20

[fol. 2281]

1921			
January	10—	E. C. Long	$71.80

DEFENDANTS' EXHIBIT V-2—SALES—PISTONS

1919			
November	29—	Sales during November	1006.95
December	26—	6 Pistons returned from Franklin Sales Co., Streator, Ill.	44.10
December	26—	32 Pistons returned from Franklin Motor Car Co., Chicago, Ill.	249.90
December	26—	6 Pistons returned from Franklin Motor Car Co., Chicago	44.10

1919—Continued

December	31—	6 Pistons returned from Dixie Motor Sales Co., Memphis, Tenn.	44.10
December	31—	Sales during December	1381.80
1920			
January	31—	Sales during January	2274.00
January	31—	6 Pistons returned from Franklin Ross Motor Car Co., St. Louis	44.10
February	28—	Sales during February	4021.65
March	31—	Sales returned during March	88.20
March	31—	Sales returned from Billings, Mont.	7.35
March	31—	Sales Pistons March	4533.42
April	1—	Returned from Franklin Motor Car Co., Chicago	44.10
April	5—	Returned from Franklin Motor Car Co., Chicago	31.50
April	10—	Returned from Holmes, Canton, Ohio	172.12
April	10—	Returned from Holmes, Canton, Ohio	137.70
April	10—	Returned from Holmes, Canton, Ohio	309.83
April	19—	Returned from Norman Gratz, Canton, Ohio	12.60
April	20—	Returned from Franklin Motor Car Co., Chicago	37.80
April	30—	Sales—April	3991.48
May	31—	2 Pistons returned from Franklin Motor Car Co., Chicago	12.60
[fol. 2282]			
May	31—	1 Piston returned from Dreschler, Oak Park	$7.65
		3 Pistons returned from Franklin Motor Car Co., Chi.	18.90
May	31—	Sales—May	4071.71
June	3—	6 Pistons to be done over—returned from Horton, Kansas	37.80
June	7—	96 Pistons to be done over—returned from Holmes, Canton	550.80

1920—Continued

June	25—	22 Pistons returned to be done over for Holmes, Canton, O.	126.23
June	23—	24 Pistons returned to be done over for Holmes, Canton, O.	137.70
June	30—	6 Pistons returned from Horton, Kansas	37.80
June	30—	Sales—June	4814.88
July	1—	1 Piston from Holmes, St. Paul	8.10
July	6—	1 Piston from F. M. Car Co., Chicago, Ill.	6.30
July	9—	1 Piston from Franklin Sherwood Company	6.30
July	3—	6 Pistons from South Side Garage	37.80
July	27—	2 Pistons from Franklin Motor Car Co., Chicago	12.60
July	31—	6 Pistons from F. B. Heathman & Company	37.80
July	31—	1 Piston from Chappel Bros.	7.50
July	31—	Sales Pistons Sales Book July	3566.69
August	31—	Return Sales—Pistons	86.40
August	31—	Return Sales—Pistons	101.70
August	31—	Sales Pistons	3497.04
September	30—	Sales Pistons—September Summary	3037.05
October	30—	Sales Book Summary—Oct.	2608.26
November	30—	Sales Book Summary	2210.68
December	31—	6 Pistons returned from Wilson M. S. Co.	37.80
December	31—	2 Pistons returned from E. T. Byram	11.20
December	31—	14 Pistons returned from Franklin Motor Car Co., Chicago, Ill.	78.40
December	31—	Sales Book Summary—December	2094.09

[fol. 2283]

1921

January	31—	Return Sales, Barr & B Garage, Salina, Kansas	$37.80
January	31—	Sales Book Summary	2713.91
February	11—	Return Sales Cramer Motor Car Co.	40.00

1921—Continued

February	28—	Sales Book Summary	1603.58
March	31—	Sales Book Summary	2999.92
April	30—	Sales Book Summary	3397.89
April	22—	Return Sales W. I. Elliott Co.	5.55
May	31—	Sales Book Summary	2232.90
June	30—	Sales Book Summary	2131.38
July	30—	Sales Book Summary	1789.62

DEFENDANTS' EXHIBIT V-2—ACCOUNT NO. 44—COST OF PISTONS SOLD

1919

November	30—	Finished Pistons, 137 Sold in Nov.	422.77
December	31—	Finished Pistons Sold (184) Dec.	300.48

1920

March	31—	Pistons returned from Little Rock	88.20
March	31—	Pistons returned from Fkln. Ross M. Co., St. Louis	18.96
March	31—	Pistons returned Billings, Mont.	2.51
April	1—	Pistons returned	867.42
April	20—	" "	42.66
May	31—	2 Pistons returned F. M. Car Co., Chi.	10.52
May	31—	1 Piston returned Deschler, Oak Park, Ill.	5.26
May	31—	3 Pistons returned F. M. Car Co., Chicago	15.78

DEFENDANTS' EXHIBIT V-4—ENTRY BOOK CONSISTING OF SALES, COSTS, FACTORY EXPENSE, ET CETERA

Note on Flyleaf—"Started new system Piston Manufacture August 17, 1920—Had men come to office for a short meeting—so as to give them better understanding of our method"

[fol. 2284]

1919			
December	26—	Sales Pistons Franklin Sales Co., Streator, Ill.	$ 44.10
December	26—	Sales Pistons	24.99
		Sales Pistons, Franklin Motor Car Company, Chicago	44.10
December	31—	Sales Pistons, Dixie Motor Sales Co.	44.10
December	31—	E. C. Long, Chas. Bartlett, For Pistons	9.80
1920			
January	23—	Advertising, E. C. Long, Giving Mr. Long Cost price on Pistons used in Mr. Chas. Bartlett's car	52.56
January	22—	E. C. Long, Finished Goods	53.13

[fol. 2285] **DEFENDANTS' EXHIBIT**

Bill of Complaint in Case No. 3510 in the U. S. District Court for the Northern District of Ohio, The Cleveland Trust Company and Chrysler Corporation vs. The Simmons Mfg. Co. and Sterling Products Corp.

(Filed in District Court.)

IN THE UNITED STATES DISTRICT COURT

NORTHERN DISTRICT OF OHIO
EASTERN DIVISION

THE CLEVELAND TRUST COMPANY,
CHRYSLER CORPORATION,
Plaintiffs,

vs.

THE SIMMONS MANUFACTURING COMPANY,
STERLING PRODUCTS CORPORATION,
Defendants.

(In Equity No. 3510.)

Spillman-Mooers	1,092,870
Mooers	1,402,309
Franquist	1,153,902
Schmiedeknecht	1,256,265
Howdeshell	16,273
Maynard	1,655,968
Jardine	1,763,523
Gulick	1,815,773

AMENDED BILL OF COMPLAINT

Now come the Plaintiffs and, pursuant to the Order of this Court hereto annexed, file this amended Bill of Complaint. Plaintiffs allege:

1. That Plaintiff, The Cleveland Trust Company, is a corporation organized and existing under the laws of the State of Ohio, having its principal place of business at Cleveland, State of Ohio.

That Plaintiff, Chrysler Corporation, is a corporation organized and existing under the laws of the State of Delaware, having its principal place of business at Highland Park, State of Michigan.

2.

That Defendant, The Simmons Manufacturing Company of Cleveland, Ohio, is a corporation organized and existing under the laws of the State of Ohio and is a citizen and inhabitant thereof, having a regular and established place of business at 3506 Perkins Avenue in the City of Cleveland, County of Cuyahoga and State of Ohio.

[fol. 2286] That Defendant, Sterling Products Corporation of St. Louis, Missouri, is a corporation duly organized and existing under the laws of the State of Missouri and has a regular and established place of business at 2914 North Market Street in the City of St. Louis, County of St. Louis, and State of Missouri.

3.

This suit is brought under the patent laws of the United States, and seeks injunctive and other relief against the defendants and each of them for infringements and contributory infringements committed by each and both defendants within this Judicial District and elsewhere within the United States.

4.

That heretofore and prior to the 18th day of July, 1913, Edward O. Spillman and Louis P. Mooers, citizens of the United States, then residing at North Tonawanda in the County of Niagara and State of New York, were the original, first and joint inventors of certain new and useful improvements in Pistons for Explosion Engines or Motors,

fully described in Letters Patent of the United States, No. 1,092,870 hereinafter mentioned, which invention or improvement was not known or used by others in this country, or patented or described in any printed publication in this or any foreign country, prior to their invention thereof, or more than two years prior to their application for said Letters Patent, and has not been in public use or on sale in this country for more than two years prior to said application, and had not been abandoned to the public, and had not been patented or caused to be patented by them or their legal representatives or assigns in any foreign country upon an application filed more than twelve months prior to the filing of their application for Letters Patent of the United States therefor; that the said Edward O. Spillman and Louis P. Mooers made due application to the Commissioner of Patents of the United States in accordance with the then existing Acts of Congress, for Letters Patent of the United States for said invention or improvement, and having in all respects complied with the conditions and requirements of said Acts of Congress, on the 14th day of April, 1914, Letters Patent of the United States No. 1,092,870, signed, sealed and executed in due form of law, for the said inven- [fol. 2287] tion or improvement were issued and delivered unto said Edward O. Spillman and Louis P. Mooers, whereby there was secured unto them, their successors and assigns for the term of seventeen years from the said 14th day of April, 1914, the sole and exclusive right to make, use and sell to others to be used, through the United States and the territories thereof, the aforesaid invention or improvement, all as by said Letters Patent, or a duly authenticated copy thereof in Court to be produced and shown unto Your Honors, will more fully and at large appear.

5

That subsequent to the granting of the aforesaid Letters Patent, namely, on or about the 16th day of June, 1916, by an instrument in writing, one George B. Pitts acquired from said Edward O. Spillman and The Herschel Spillman Company, a corporation of the State of New York, the undivided one-half of the entire right and interest in, to and under said Letters Patent of the United States No. 1,092,870, said assignment having been duly recorded on the 5th day of September, 1916, in Liber R-101, page 1 of the Trans-

fers of Patents; that thereafter and on or about the 3rd day of July, 1919, the said George B. Pitts by an instrument in writing that was duly recorded in the United States Patent Office on the 28th day of July, 1919 in Liber Q-107, page 336 of the Transfers of Patents, assigned said undivided one-half of the entire right, title and interest in, to and under said Letters Patent No. 1,092,870 to your Orator, The Cleveland Trust Company; and that the said Louis P. Mooers on the 10th day of July, 1919, by an instrument in writing that was duly recorded in the United States Patent Office on the 28th day of July, 1919, in Liber Q-107, page 339 of the Transfers of Patents, assigned the remaining undivided one-half of the entire right, title and interest in, to and under said Letters Patent No. 1,092,870 to your Orator, The Cleveland Trust Company, whereby your Orator became vested with and holds the entire right, title and interest in, to and under said Letters Patent No. 1,092,870, as will more fully and at large appear upon production in Court of the assignments aforesaid.

[fol. 2288] 6

That heretofore and prior to the 2nd day of June, 1917, Louis P. Mooers, a citizen of the United States, then residing at Cincinnati, Hamilton County, State of Ohio, was the original, first and true inventor of certain new and useful improvements in Pistons for Internal Combustion Motors, fully described in Letters Patent of the United States No. 1,402,309, hereinafter mentioned, which invention or improvement was not known or used by others in this country or patented or described in any printed publication in this or any foreign country, prior to his invention thereof, or more than two years prior to his application for said Letters Patent, had not been in public use or on sale in this country for more than two years prior to said application; had not been abandoned to the public, and had not been patented or caused to be patented by him or his legal representatives or assigns in any foreign country upon an application filed more than twelve months prior to the filing of his application for Letters Patent of the United States therefor; that the said Louis P. Mooers made due application to the Commissioner of Patents of the United States in accordance with the then existing Acts of Congress, for Letters Patent of the United States for said invention and improvement.

7

That by an instrument in writing duly executed and delivered by said Louis P. Mooers and duly recorded in the United States Patent Office in Liber P. 103, page 133 of the Transfers of Patents, said Louis P. Mooers assigned an undivided half of the entire right, title and interest in, and to said invention and improvement and in and to said application for Letters Patent to George B. Pitts of Cleveland, Ohio and authorized and requested the Commissioner of Patents to issue the Letters Patent upon said application and for said invention and improvement to said George B. Pitts and Louis P. Mooers; and by said instruments in writing specified in Article 3 of this Bill as recorded in Liber Q-107, pages 336 and 339 of the Transfers of Patents, said George B. Pitts and Louis P. Mooers respectively each assigned his undivided one-half of the entire right, title and interest in, to and under said Letters Patent of the United States No. 1,402,309 to your Orator, The Cleveland Trust Company, and authorized and requested the Commissioner [fol. 2289] of Patents to issue the Letters Patent upon said application and for said invention and improvement to said The Cleveland Trust Company; whereby your Orator became vested with and holds the entire right, title and interest in, to and under said Letters Patent No. 1,402,309, as will more fully and at large appear upon production in Court of the said Letters Patent and the assignments aforesaid.

8

That heretofore and prior to the 1st day of August, 1914, Gustave E. Franquist deceased, then a citizen of the United States residing in the City of New Brunswick, County of Middlesex and State of New Jersey, was the original, first and sole inventor of certain new and useful improvements in Pistons, fully described in Letters Patent of the United States No. 1,153,902, which invention or improvement was not known or used by others in this country, or patented or described in any printed publication in this or any foreign country prior to his invention thereof for more than two years prior to his application for Letters Patent, and had not been in public use or on sale in this country for more than two years prior to said application, and had not been abandoned to the public, and had not been patented or caused to be patented by him or his

legal representatives or assigns in any foreign country upon an application filed more than twelve months prior to the filing of his application for Letters Patent of the United States therefor; that said Gustave E. Franquist made such application to the Commissioner of Patents of the United States in accordance with the then existing Acts of Congress for Letters Patent of the United States for said invention or improvement and, having in all respects complied with the conditions and requirements of said Acts of Congress, on or about the 21st day of September, 1915, Letters Patent of the United States No. 1,153,902, signed, sealed and executed in due form of law for the said invention or improvement, were issued and delivered unto said Gustave E. Franquist, whereby there was secured to him, his successors and assigns, for the term of seventeen years from the said 21st day of September, 1915, the sole and exclusive right to make, use and sell to others to be used throughout the United States and the territories thereof, pistons embodying the aforesaid invention or improvements, all by said Letters Patent or [fol. 2290] a duly authenticated copy thereof in Court to be produced and shown unto Your Honors, as will more fully and at large appear.

9

That subsequent to the granting of the aforesaid Letters Patent, namely on or about the 16th day of May, 1924, by an instrument in writing that was duly recorded in the United States Patent Office on or about the 9th day of June, 1924, in Liber 121 of the Transfers of Patents, page 199, said Gustave E. Franquist assigned the entire right, title and interest in, to and under said Letters Patent of the United States No. 1,153,902 to your Orator, The Cleveland Trust Company; whereby your Orator became vested with and now owns and holds the entire right, title and interest in, to and under said Letters Patent of the United States No. 1,153,902, as will more fully and at large appear upon production in Court of the assignments aforesaid.

10

That heretofore and prior to the 22nd day of May, 1920, Roland M. Howdeshell, a citizen of the United States then residing in the City of St. Louis, County of

St. Louis and State of Missouri, was the original, first and sole inventor of certain new and useful improvements in Pistons for Engine Cylinders, as fully described in Letters Patent of the United States No. 1,473,233, which invention or improvement was not known or used by others in this country, or patented or described in any printed publication in this or any foreign country prior to his invention thereof, or more than two years prior to his application for Letters Patent; had not been in public use or on sale in this country for more than two years prior to said application; had not been abandoned to the public, and had not been patented or caused to be patented by him or his legal representatives or assigns in any foreign country upon an application filed more than twelve months prior to the filing of his application for Letters Patent of the United States therefor; that said Roland M. Howdeshell made due application to the Commissioner of Patents of the United States in accordance with the then existing Acts of Congress for Letters Patent of the United States for said invention or improvement.

[fol. 2291] 11

That by an instrument in writing duly signed, sealed and delivered on or about the 20th day of May, 1920, and duly recorded in the United States Patent Office on or about the 22nd day of May, 1920, in Liber H-110, page 170 of the Transfers of Patents, the said Roland M. Howdeshell did sell, assign and transfer to H. & H. Machine Company, a corporation of Missouri having its principal place of business at St. Louis, Missouri, the entire right, title and interest in and to the said invention and application for Letters Patent and Letters Patent to issue thereon, and said Roland M. Howdeshell, having in all respects duly complied with the conditions and requirements of said Acts of Congress, and after due examination of the aforesaid application, the Commissioner of Patents did, on or about the 6th day of November, 1923, grant and deliver said Letters Patent of the United States No. 1,473,233 to said H. & H. Machine Company, in the name of the United States of America; whereby there was granted to said H. & H. Machine Company, its successors and assigns, the exclusive right to make use of said invention throughout the United States and the territories thereof, for the term of seventeen years from

the said 6th day of November, 1923, as will more fully and at large appear by the production in this Court of a duly authenticated copy of said Letters Patent.

12

That subsequent to the granting of the aforesaid Letters Patent No. 1,473,233, said H. & H. Machine Company, by an instrument in writing dated the 16th day of March, 1925 and duly recorded in the United States Patent Office on or about the 13th day of April, 1925 in Liber W-123, pages 440 and 442 of the Transfers of Patents, said H. & H. Machine Company assigned the entire right, title and interest in, to and under said Letters Patent of the United States No. 1,473,233 to The Cleveland Trust Company, plaintiff, whereby plaintiff became vested with and now holds the entire right, title and interest in, to and under said Letters Patent No. 1,473,233, as will more fully and at large appear upon production in Court of the assignments aforesaid.

13

That on or about the 20th day of August, 1925, said Roland M. Howdeshell and said The Cleveland Trust Com-
[fol. 2292] pany, verily believing that the aforesaid Letters Patent of the United States No. 1,473,233 were inoperative for the reason that the specification thereof was defective, and that such defect consisted particularly in the failure of the patent to claim broadly the novel features of the invention therein disclosed, said Letters Patent were surrendered to the United States Patent Office and an application for re-issue of the aforesaid Letters Patent was made by said Roland M. Howdeshell and his assignee, The Cleveland Trust Company, plaintiff.

14

That after due examination of said application for re-issue of said Letters Patent, the Commissioner of Patents did, on or about the 23rd day of February, 1926, grant and deliver to plaintiff, The Cleveland Trust Company, as assignee of said H. & H. Machine Company, in the name of the United States of America, United States re-issue Letters Patent No. Re-16,273; whereby there was granted to plaintiff, its successors and assigns, the exclusive right, for the term of seventeen years from said 23rd day of February, 1926, to make, use and sell pistons embodying said

inventions throughout the United States and the territories thereof, as will more fully and at large appear by production here in this Court of the original of said Re-issue Letters Patent Re-16,273.

15

That heretofore, and prior to the third day of January, 1921, Howard E. Maynard, then residing at Detroit, in the County of Wayne and State of Michigan, was the original, first and true inventor of certain new and useful improvements in Pistons fully described in Letters Patent of the United States No. 1,655,968 hereinafter mentioned, which invention or improvement was not known or used by others in this country, or patented or described in any printed publication in this or any foreign country before his said invention or discovery thereof, or more than two years prior to his application for Letters Patent therefor, and had not been in public use or on sale in this country for more than two years prior to his application for Letters Patent therefor; and had not been patented or caused to be patented by him or his legal representatives or assigns in any foreign country upon an application filed more than twelve months prior to the filing of the application for Letters Patent thereon in this country.

[fol. 2293] 16

That the said Howard E. Maynard, being as aforesaid, the inventor of the said improvement, made application to the Commissioner of Patents of the United States for Letters Patent in accordance with the then existing Acts of Congress, and, having in all respects complied with the conditions and requirements of said Acts of Congress, on the tenth day of January, 1928 Letters Patent of the United States numbered 1,655,968, signed, sealed and executed in due form of law, for the said invention or improvement, were issued to said Chrysler Corporation, a corporation of Delaware, at Highland Park, Michigan, plaintiff, and Aluminum Company of America, a corporation of Pennsylvania, at Pittsburgh, Pa., as assignees each of one-half of the entire right, title and interest in and to said Letters Patent, whereby there was secured to Chrysler Corporation and Aluminum Company of America for the term of seventeen years from the tenth day of January, 1928, the sole

and exclusive right to make, use and sell to others to be used throughout the United States and the territories thereof, the aforesaid invention or improvement, all as by said Letters Patent, or a duly authenticated copy thereof here in Court to be produced and shown unto Your Honors, as will more fully and at large appear.

17

That prior to the filing of this Bill of Complaint, said Aluminum Company of America, by an instrument in writing dated February 23, 1928 and recorded in the Transfers of Patents in the United States Patent Office as of May 12, 1930 in Liber Z-143, page 283, assigned its undivided one-half interest in the entire right, title and interest in and to said Letters Patent No. 1,655,968 to The Cleveland Trust Company, plaintiff herein, together with the right to sue for and recover damages for past infringements of said Letters Patent, whereby your plaintiff, The Cleveland Trust Company, became vested with and now holds an undivided one-half interest in the entire right, title and interest in, to, and under said Letters Patent No. 1,655,968, as will more fully and at large appear upon production in Court of the assignments aforesaid.

[fol. 2294]

18

That the plaintiff, Chrysler Corporation, is a non-resident, and resides without the jurisdiction of this Court and therefore cannot be served with process and made a co-defendant in this cause, and that plaintiff, The Cleveland Trust Company, has advised Chrysler Corporation of the imminent pendency of this case and of the obligation of Chrysler Corporation to join voluntarily in the bringing of this suit, but that Chrysler Corporation has refused or declined to so voluntarily join and that the plaintiff, The Cleveland Trust Company, is without remedy on the Maynard patent unless Chrysler Corporation is joined as a co-plaintiff in this cause, and therefore to prevent a failure of justice and to enable The Cleveland Trust Company to protect its interests herein, the Chrysler Corporation is made a plaintiff herein without its consent.

19

That heretofore and prior to the 11th day of March, 1920, Frank Jardine, a citizen of the United States, then residing

at Cleveland, in the County of Cuyahoga and State of Ohio, was the original, first and true inventor of certain new and useful improvements in Pistons, fully described in Letters Patent of the United States No. 1,763,523, hereinafter mentioned, which invention or improvement was not known or used by others in this country or patented or described in any printed publication in this or any foreign country, prior to his invention thereof, or more than two years prior to his application for said Letters Patent; had not been in public use or on sale in this country for more than two years prior to said application; had not been abandoned to the public, and had not been patented or caused to be patented by him or his legal representatives or assigns in any foreign country upon an application filed more than twelve months prior to the filing of his application for Letters Patent of the United States therefor; that the said Frank Jardine made due application to the Commissioner of Patents of the United States in accordance with the then existing Acts of Congress, for Letters Patent of the United States for said invention and improvement, and having in all respects complied with the conditions and requirements of said Acts of Congress, and having, by mesne assignments, as will more fully and at large appear upon produc- [fol. 2295] tion in Court of said assignments, assigned his entire right, title and interest in and to said Letters Patent No. 1,763,523 to The Cleveland Trust Company, as a Trustee, and having authorized and requested the Commissioner of Patents to issue the Letters Patents upon said application and for said invention and improvements to said The Cleveland Trust Company, on or about the 10th day of June, 1930, Letters Patent of the United States No. 1,763,523, signed, sealed and executed in due form of law, for the said invention or improvement, were issued and delivered to plaintiff, The Cleveland Trust Company, whereby there was secured to it, its successors and assigns, for the term of seventeen years from the said 10th day of June, 1930, the sole and exclusive right to make, use, and sell to others to be used, throughout the United States and the territories thereof, the aforesaid invention or improvement, all as by said Letters Patent or a duly authenticated copy thereof in Court to be produced and shown unto Your Honors, will more fully and at large appear.

20

That heretofore and prior to the 14th day of July, 1917, Victor E. Schmiedeknecht, a citizen of the United States then residing at Louisville in the County of Jefferson and State of Kentucky, was the first and true inventor of certain new and useful improvements in Pistons, fully described in Letters Patent of the United States No. 1,256,265, hereinafter mentioned, which invention and improvement was not known or used by others in this country, or patented or described in any printed publication in this or any foreign country, prior to his invention thereof, or more than two years prior to his application for said Letters Patent; had not been in public use or on sale in this country for more than two years prior to said application; had not been abandoned to the public, and had not been patented or caused to be patented by him or his legal representatives or assigns in any foreign country upon an application filed more than twelve months prior to the filing of his application for Letters Patent of the United States therefor; that the said Victor E. Schmiedeknecht made due application to the Commissioner of Patents of the United States in accordance with the then existing Acts of Congress, for Letters Patent of the United States for said invention and im-[fol. 2296] provement, and having in all respects complied with the conditions and requirements of said Acts of Congress, on the 12th day of February, 1918, Letters Patent of the United States No. 1,256,265, signed, sealed and executed in due form of law for the said invention or improvement, were issued and delivered unto said Victor E. Schmiedeknecht, his successors and assigns, for the term of seventeen years from said 12th day of February, 1918, the sole and exclusive right to make, use and sell to others to be used, throughout the United States and the territories thereof, the aforesaid invention or improvement, all as by said Letters Patent or a duly authenticated copy thereof in Court to be produced and shown to Your Honors will more fully and at large appear.

21

That subsequent to the granting of the aforesaid Letters Patent No. 1,256,265, by an instrument in writing that was duly recorded in the United States Patent Office on or about

the 16th day of August, 1927 in Liber F-131, page 79 of the Transfers of Patents, said Victor E. Schmiedeknecht assigned the entire right, title and interest in, to and under said Letters Patent of the United States No. 1,256,265, together with the right to sue for, collect, and retain damages and profits for past infringement under said Letters Patent to one Frank Kent of New York City; and, whereas this assignment was further amplified by further warranty and guarantee that was also recorded in the United States Patent Office on or about the 16th day of August, 1927 in Liber P-131, page 81 of the Transfers of Patents; whereby said Frank Kent, his successors and assigns, became vested with the entire right, title and interest in, to and under said Letters Patent of the United States No. 1,256,265, together with the right to sue for, collect, and retain damages and profits for past infringements of said Letters Patent.

22

That by an instrument in writing dated October 12, 1927. and duly recorded in the United States Patent Office in the Transfers of Patents, said Frank Kent assigned the entire right, title and interest in, to and under said Letters Patent of the United States, together with the right to sue, collect, and retain damages and profits for past infringement, to Bohn Aluminum & Brass Corporation of Detroit, Michigan, its successors and assigns.

[fol. 2297] 23

That said Bohn Aluminum & Brass Corporation, by an instrument in writing dated on or about August 31st, 1927, and recorded in the United States Patent Office in Liber C-133, page 618 of the Transfers of Patents, assigned to Your Orator, The Cleveland Trust Company, its successors and assigns, the entire right, title and interest in, to and under said Letters Patent, together with the right to sue for, collect and retain damages and profits for past infringements of said Letters Patent; whereby plaintiff, The Cleveland Trust Company became vested with and now holds the entire right, title and interest in, to and under the aforesaid Letters Patent No. 1,256,265, and the right to sue for, collect and retain damages and profits for past infringement of said Letters Patent, as will more fully and at large appear upon production in this Court of the assignments aforesaid or duly authenticated copies thereof.

24

That heretofore and prior to the 30th day of November, 1917, Edward J. Gulick, a citizen of the United States then residing in Mishawaka, County of St. Joseph, and State of Indiana was the original, first and true inventor of certain new and useful improvements in Pistons, fully described in application for Letters Patent of the United States, Serial No. 204,661, which invention was not known or used by others in this country or patented or described in any printed publication in this or any foreign country, prior to his invention thereof, or more than two years prior to his said application for Letters Patent therefor; that said invention had not been in public use or on sale in this country for more than two years prior to said application for Letters Patent, had not been abandoned to the public and had not been patented or caused to be patented by him or his legal representatives or assigns in any foreign country upon an application filed more than twelve months prior to the filing of said application for Letters Patent of the United States; that on or about November 30, 1917, said Edward J. Gulick made due application to the Commissioner of Patents of the United States in accordance with the then existing Acts of Congress, for Letters Patent of the United States for said invention or improvements and, having in all respects complied with the conditions and requirements of said Acts of Congress, on the 21st day of [fol. 2298] July, 1931, Letters Patent of the United States No. 1,815,773 were signed, sealed and executed in due form of law for the said invention, and were issued and delivered unto Plaintiff, The Cleveland Trust Company, its successors and assigns, as assignee of the entire right, title and interest of said Edward J. Gulick, for the term of seventeen years from said 21st day of July, 1931, thereby granting to it the sole and exclusive right to make, use and sell to others to be used, throughout the United States, its territories and dependencies, the aforesaid invention or improvements, all as by said Letters Patent or a duly authenticated copy thereof in Court to be produced and shown to Your Honor, as will more fully and at large appear.

25

That prior to the grant of aforesaid Letters Patent No. 1,815,773, said Edward J. Gulick assigned to the Packard

Motor Car Company of Detroit, Michigan, his entire right, title and interest in and to the invention set forth and described in the aforesaid application for Letters Patent Serial No. 204,661 by an instrument in writing dated Nov. 23, 1917 that was duly recorded in the United States Patent Office on or about the 30th day of November, 1917, in Liber J-103, page 468 of the Transfers of Patents; whereby said Packard Motor Car Company of Detroit, Michigan, its successors and assigns became vested with the entire right, title and interest in and to the aforesaid invention and in and to said application for Letters Patent Serial No. 204,661 and in and to any Letters Patent issuing pursuant thereto.

26

That, on or about September 11, 1922 and prior to the grant of aforesaid Letters Patent No. 1,815,773, the Packard Motor Car Company of Detroit, Michigan, assigned to The Cleveland Trust Company of Cleveland, Ohio, its entire right, title and interest in and to the invention set forth and described in the aforesaid application for Letters Patent Serial No. 204,661 and in and to said application for Letters Patent by an instrument in writing dated September 11, 1922 that was duly recorded in the United States Patent Office on or about the 13th day of September, 1922, in Liber S-116, page 485 of the Transfers of Patents, whereby said The Cleveland Trust Company of Cleveland, Ohio, its [fol. 2299] successors and assigns became vested with, has continuously held and now owns the entire right, title and interest in and to said invention and in and to said application for Letters Patent Serial No. 204,661 and in and to said Letters Patent of the United States No. 1,815,773 that issued pursuant thereto.

27

That the validity of each of the aforesaid Letters Patent has been recognized and acquiesced in by the public generally since the date of issue of each of said patents, except for these defendants and others encouraged by them. At various times said patents have been especially recognized and acquiesced in by parties who have discontinued infringement thereof and who have made due amends to plaintiff. Others have taken licenses under said patents. Substantial and material royalties have been paid to the

plaintiff under said patents. The licensees under said patents have manufactured and sold the pistons covered by said patents in great numbers. These pistons have gone into extensive and successful use. Licensees under said patents have built plants and established organizations for the manufacture and sale of such pistons on the strength of and by reason of their confidence in the patents here in suit.

28

That plaintiff has duly notified each and both of these defendants of their infringement of each of the aforesaid Letters Patent and has requested them and each of them to desist, but defendants and each of them have continued their infringements in defiance of said notices.

29

These defendants, The Simmons Manufacturing Company and Sterling Products Corporation, jointly and severally, subsequent to the grant of said Letters Patent and prior to the filing of this Bill of Complaint and within six years hereof, with full knowledge of each of said Letters Patent and without the consent of plaintiff, The Cleveland Trust Company, but in violation of its rights, and after due notice, has within the Judicial District of this Court and elsewhere within the United States, infringed each of the [fol. 2300] aforesaid Letters Patent and contributed to the infringement thereof by making and/or causing to be made, by using and/or causing to be used, and selling and/or causing to be sold in this Judicial District and elsewhere within the United States, Pistons for Internal Combustion Engines embodying jointly and severally the inventions of said Letters Patent and in infringement thereof.

That in so infringing, defendants have realized and received great gains and profits which should, and otherwise would, have been received by plaintiffs, each and both of them, and defendants, and each and both of them have correspondingly inflicted on plaintiffs great loss and damage, but to what extent plaintiffs cannot now set forth and therefore pray discovery with respect thereto; that plaintiffs fear and have reason to fear that defendants will continue their aforesaid infringing acts to an even greater extent unless enjoined by this Honorable Court; and de-

fendants, and each of them, have and will thereby induce others to venture to infringe the said Letters Patent aforesaid, to the irreparable injury of plaintiffs.

30

Because of these premises, plaintiffs are without adequate or sufficient remedy at law and therefore bring this suit in equity.

Wherefore, the plaintiffs pray:

First. That a writ of subpoena ad respondum may issue out of and under the seal of this Court requiring each and both of said defendants, The Simmons Manufacturing Company and Sterling Products Corporation, to appear and make answer to this Bill of Complaint, but not under oath, answer under oath being hereby expressly waived, to the best and utmost of their knowledge, information and belief and to do and perform such things as to this Court may seem meet and just;

Second. That this Court may grant an injunction, perpetual as well as temporary, enjoining each and both of said defendants, The Simmons Manufacturing Company and Sterling Products Corporation, as well as each of the directors, officers, associates, successors, agents, attorneys and employees, and every person acting for or on the behalf of each and/or both of said defendants, from further infringing or contributing to the infringment of any and/or each of said Letters Patent;

[fols. 2301-2356] *Third.* That said defendants, The Simmons Manufacturing Company and Sterling Products Corporation, and each and both of them, may be required to account before a Master in the usual manner of accountings for the gains, profits and advantages due to and arising out of their aforesaid infringements and contributory infringements herein complained about, as well as the damages sustained by plaintiffs, by reason of said infringements;

Fourth. That said defendants, The Simmons Manufacturing Company and Sterling Products Corporation, each and both of them, be required to pay over to plaintiffs, the gains and profits so accounted for and also the damages sustained by plaintiffs as the result of said infringements and contributory infringements;

Fifth. That the defendants, each and both of them, be decreed to pay the costs, charges and disbursements of this suit;

Sixth. That the plaintiffs may have such other and further relief as the equity of the case may require, and as to this Honorable Court may seem just and proper.

The Cleveland Trust Company, By: —— ——, Vice President; Chrysler Corporation, By: —— ——, Vice-President, The Cleveland Trust Company. —— ——, Solicitor for Plaintiffs.

AFFIDAVIT

STATE OF OHIO,
County of Cuyahoga, ss.

On this 1st day of August, 1931, before the undersigned, a Notary Public within and for the County and State aforesaid, personally appeared R. A. Malm and made oath that he is the Vice President of The Cleveland Trust Company, the above named complainant, that he has read the foregoing Bill of Complaint, and knows the contents thereof, and that the same is true, except as to those matters stated on information and belief, and as to those matters he believes it to be true.

D. F. KING, *Notary Public.*

. . . . . .

[fols 2357-2363] **CERTIFICATE OF CLERK**

NORTHERN DISTRICT OF OHIO, ss.:

I, F. J. Denzler, Clerk of the United States District Court within and for said district, do hereby certify that the foregoing printed pages contain a full, true and complete copy of the records and all proceedings in the consolidated causes of Nos. 4045, 4046 and 4047 Equity, including the petitions for appeal, assignments of error, orders allowing appeal, bonds on appeal, and other pleadings in accordance with the praecipes for transcript filed herein, the originals of which papers, except certain original exhibits withdrawn by leave of court, remain in my custody as clerk of said court.

There are also attached hereto and transmitted herewith the citations issued and allowed herein.

In Testimony Whereof, I have hereunto signed my name and affixed the seal of said court at Cleveland, in said district, this — day of October, A. D 1935 and in the one hundred and sixtieth year of the Independence of the United States of America.

F. J. Denzler, *Clerk,*
(Seal) By C. B. Watkins,
Chief Deputy.

[fol. 2364] Caption

United States of America,
Northern District of Ohio, Eastern Division, ss:

Record of the proceedings of the District Court of the United States within and for the Eastern Division of the Northern District of Ohio, in the causes and matters hereinafter stated, the same being finally disposed of at a regular term of said court begun and held at the City of Cleveland, in said district, on the first Tuesday in April, being the third day of said month, in the year of our Lord one thousand nine hundred and thirty-four and in the one hundred and fifty-eighth year of the Independence of the United States of America, to-wit, on Friday, the 27th day of July, A. D. 1934.

Honorable Paul Jones, *United States District Judge.*

No. 4046. Equity.

The Cleveland Trust Company, Chrysler Corporation,

vs.

The Aberdeen Motor Supply Company

Said action was commenced on the 17th day of October, A. D. 1931 and proceeded to final disposition at the term and day above written and during the progress thereof pleadings and papers were filed, process was issued and returned and orders of the court were made and entered in the order and on the dates hereinafter stated, to-wit:

[fol. 2365] In United States District Court

Assignment of Errors

Filed April 17, 1936

[Case No. 4046]

Now come plaintiffs, The Cleveland Trust Company and Chrysler Corporation, and present with their accompanying

petition for appeal from the final decree entered herein, the following assignment of errors, which are hereinafter grouped with respect to subject matter:

Group A

Assignment of errors relating to the validity of Gulick patent No. 1,815,733.

1. The Court erred in failing to find and hold the Gulick patent No. 1,815,733 good and valid in law, particularly as to claims 1, 11, 12, 13, 15, 18, 22, 27, 28, 29, 30, 33, 35, 36, 37, 38, 41, 42 and 43 thereof, and in failing to sustain plaintiffs' exceptions Nos. 2, 3 and 101.

Assignments 2 to 27, inclusive, same as in case 4045 (R. pp. 1233 to 1239).

Group B

Assignment of errors relating to infringement of the Gulick patent in suit.

28. The Court erred in not holding that defendant has infringed the Gulick patent No. 1,815,733, particularly as to claims 1, 11, 12, 13, 15, 18, 22, 27, 28, 29, 30, 33, 35, 36, 37, 38, 41, 42 and 43 thereof, and in failing to sustain plaintiffs' exceptions Nos. 45 and 102.

29. The Court erred in approving and adopting the Special Master's finding of fact No. 38:

"That defendants' pistons, Exs. 1, * * * and 8 do not embody the structure, function and mode of operation of the Gulick patent in suit."

and in not sustaining plaintiffs' exception (No. 44) to the aforesaid finding of fact No. 38.

30. The Court erred in approving and adopting the Special Master's finding of fact No. 43 and in not sustaining plaintiffs' exception (No. 54) to the following statements and conclusions in the aforesaid finding of fact No. 43:

(a) "* * * that the prior art requires restriction of the (Gulick) patent to the employment of webs which are of sufficient length and thinness to permit flexing of those [fol. 2366] webs at the top of the skirt;

(b) that Exhibit 1 does not employ such characteristic webs;

(c) that Exhibit 8 does not employ such characteristic webs; * * *."

Assignment 31 same as in case 4045 (R. p. 1240).

32. The Court erred in approving and adopting the Special Master's finding of fact No. 49,

"That such construction and arrangement (of the connectors from the head to the wrist pin boss in Exhibit 8) does not secure the mode of operation contemplated by the Gulick and Jardine patents."

and in not sustaining plaintiff's exception (No. 60) to the aforesaid finding of fact No. 49.

33. The Court erred in approving and adopting the Special Master's finding of fact No. 51:

"That defendants' pistons, Exs. 1, * * * 8 and 9 employ the essential structure, function and mode of operation of the prior art, more particularly the Franquist patent No. 1,153,902 and Exs. 8 and 9, also the Chenard & Walcker French patent No. 468,595."

and in not sustaining plaintiffs' exception (No. 62) to the aforesaid finding of fact No. 51.

34. The Court erred in approving and adopting the Special Master's conclusion of law No. 37:

"That defendant's pistons, Exs. 1, * * * and 8 do not infringe the Gulick patent in suit."

and in not sustaining plaintiffs' exception (No. 89) to the aforesaid conclusion of law.

Group C

Assignment of errors relating to validity of the Jardine patent No. 1,763,523.

Assignments 35 to 41, inclusive, same as 34 to 40, inclusive, in case 4045 (R. pp. 1241 to 1242).

Group D

Assignment of errors relating to infringement of Jardine patent in suit.

Assignment 42 same as 41 in case 4045 (R. p. 1242).

[fol. 2367] 43. The Court erred in approving and adopting the Special Master's finding of fact No. 39:

"That defendants' pistons, Exhibits 1, * * * and 8 do not embody the structure, function and mode of operation of the Jardine patent in suit."

and in not sustaining plaintiffs' exception (No. 46) to the aforesaid finding of fact No. 39.

44. The Court erred in approving and adopting the Special Master's finding of fact No. 44 and in not sustaining plaintiffs' exception (No. 55) to the following statements and conclusions in finding of fact No. 44:

(a) "* * * that the prior art requires restriction of the patent (Jardine) to the employment of webs which are of sufficient lengths and thinness to permit flexing of these webs at the top of the skirt;

(b) that Ex. 1 does not employ such characteristic webs;

(c) that Ex. 8 does not employ such characteristic webs."

45. The Court erred in approving and adopting the Special Master's conclusion of law No. 38:

"That defendants' pistons, Exs. 1, * * * and 8 do not infringe the Jardine patent in suit."

and in not sustaining plaintiffs' exception (No. 90) to the aforesaid conclusion of law No. 38.

Groups and Assignments 46 to 67, inclusive, same as 45 to 66, inclusive, in case 4045 (R. pp. 1243 to 1247).

Group H

Assignment of errors relating to infringement of Mooers patent in suit.

Assignment 68 same as 67 in case 4045 (R. p. 1248).

69. The Court erred in approving and adopting the Special Master's finding of fact No. 41:

"That defendants' pistons, Exs. 1, * * * 8 and 9 do not embody the structure, function and mode of operation of the Mooers patent in suit."

and in not sustaining plaintiffs' exception (No. 50) to the aforesaid finding of fact No. 41.

70. The Court erred in approving and adopting the Special Master's finding of fact No. 46 and in not sustaining [fols. 2368-2369] plaintiffs' exception (No. 57) to the following statements and conclusions included in the Special Master's finding of fact No. 46:

(a) "* * * that the prior art requires such a restriction; (of the connectors from the head to the top of the skirt in the Mooers patent to narrow connectors of restricted cross sections);

(b) that in Exs. 1, * * * 8 and 9 the connectors are heavy and not of a structure as described in the Mooers patent * * *."

71. The Court erred in approving and adopting the Special Master's conclusion of law No. 40:

"That defendants' pistons, Exs. 1, * * * 8 and 9 do not infringe the Mooers patent in suit."

and in not sustaining plaintiffs' exception (No. 92) to the aforesaid conclusion of law No. 40.

Groups and Assignments 72 to 82, inclusive, same as 71 to 81, inclusive, in case 4045 (R. pp. 1248 to 1250).

* * * * * * * * *

[fol. 2370] CAPTION

UNITED STATES OF AMERICA,
Northern District of Ohio, Eastern Division, ss:

Record of the proceedings of the District Court of the United States within and for the Eastern Division of the Northern District of Ohio, in the causes and matters hereinafter stated, the same being finally disposed of at a regular term of said court begun and held at the City of Cleveland, in said district, on the first Tuesday in April, being the third day of said month, in the year of our Lord one thousand nine hundred and thirty-four and in the one hundred and fifty-eighth year of the Independence of the United

States of America, to-wit, on Friday, the 27th day of July, A. D. 1934.

Honorable Paul Jones, United States District Judge.

No. 4047. Equity.

THE CLEVELAND TRUST COMPANY, CHRYSLER CORPORATION,

vs.

THE F. E. ROWE SALES COMPANY

Said action was commenced on the 17th day of October, A. D. 1931 and proceeded to final disposition at the term and day above written and during the progress thereof pleadings and papers were filed, process was issued and returned and orders of the court were made and entered in the order and on the dates hereinafter stated, to-wit:

[fol. 2371] IN UNITED STATES DISTRICT COURT

ASSIGNMENT OF ERRORS—Filed April 17, 1936

[Case No. 4047]

Now come plaintiffs, The Cleveland Trust Company and Chrysler Corporation, and present with their accompanying petition for appeal from the final decree entered herein, the following assignment of errors, which are hereinafter grouped with respect to subject matter:

Group A

Assignment of errors relating to the validity of Gulick patent No. 1,815,733.

1. The Court erred in failing to find and hold the Gulick patent No. 1,815,733 good and valid in law, particularly as to claims 1, 4, 11, 12, 13, 15, 18, 22, 27, 28, 29, 30, 33, 34, 35, 36, 37, 38, 41, 42 and 43 thereof, and in failing to sustain plaintiffs' exceptions Nos. 2, 3, and 101.

Assignments 2 to 27, inclusive, same as in case 4045. (R. pp. 1233 to 1239.)

Group B

Assignment of errors relating to infringement of the Gulick patent in suit.

28. The Court erred in not holding that defendant has infringed the Gulick patent No. 1,815,733, particularly as to claims 1, 4, 11, 12, 13, 15, 18, 22, 27, 28, 29, 30, 33, 34, 35, 36, 37, 38, 41, 42 and 43 thereof, and in failing to sustain plaintiffs' exceptions Nos. 45 and 102.

29. The Court erred in approving and adopting the Special Master's finding of fact No. 38,

"That defendants' pistons, Exs. 1, BBB, CCC, 3-J, 3-O and 8 do not embody the structure, function and mode of operation of the Gulick patent in suit."

and in not sustaining plaintiffs' exception (No. 44) to the aforesaid finding of fact No. 38.

30. The Court erred in approving and adopting the Special Master's finding of fact No. 43 and in not sustaining plaintiffs' exception (No. 54) to the following statements and conclusions in the aforesaid finding of fact No. 43:

(a) " * * * that the prior art requires restriction of the (Gulick) patent to the employment of webs which are of [fol. 2372] sufficient length and thinness to permit flexing of those webs at the top of the skirt;

(b) that Exhibit 1 does not employ such characteristic webs;

(c) that Exhibit 8 does not employ such characteristic webs; and

(d) that Exhibits BBB and CCC * * * employ no webs at all."

Assignment 31 same as in case 4045 (R. p. 1240).

32. The Court erred in approving and adopting the Special Master's finding of fact No. 49,

"That such construction and arrangement (of the connectors from the head to the wrist pin boss in Exhibit 8) does not secure the mode of operation contemplated by the Gulick and Jardine patents."

and in not sustaining plaintiffs' exception (No. 60) to the aforesaid finding of fact No. 49.

33. The Court erred in approving and adopting the Special Master's finding of fact No. 50 and in not sustaining plaintiffs' exception (No. 61) to the following statements and conclusions in the said finding of fact No. 50:

"That Exs. BBB and CCC * * * do not employ any webs connecting the head with the skirt and, therefore, no webs of such flexibility as contemplated by the Gulick, Jardine and even Maynard patents, if the latter has such webs having such characteristics."

34. The Court erred in approving and adopting the Special Master's finding of fact No. 51,

"That defendants' pistons, Exs. 1, BBB, CCC, 3-J, 3-O, 8 and 9 employ the essential structure, function and mode of operation of the prior art, more particularly the Franquist patent No. 1,153,902 and Exs. 8 and 9, also the Chenard & Walcker French patent No. 468,595."

and in not sustaining plaintiffs' exception (No. 62) to the aforesaid finding of fact No. 51.

35. The Court erred in approving and adopting the Special Master's conclusion of law No. 37,

[fol. 2373] "* * * that defendants' pistons, Exs. 1, BBB, CCC, 3-J, 3-O and 8 do not infringe the Gulick patent in suit."

and in not sustaining plaintiffs' exception (No. 89) to the aforesaid conclusion of law.

Group C

Assignment of errors relating to validity of the Jardine patent No. 1,763,523.

Assignments 36 to 42, inclusive, same as assignments 34 to 40, inclusive, of case 4045 (R. pp. 1241 to 1242).

Group D

Assignment of errors relating to infringement of Jardine patent in suit.

Assignment 43 same as 41 in case 4045 (R. pp. 1242).

44. The Court erred in approving and adopting the Special Master's finding of fact No. 39,

"That defendants' pistons, Exhibits 1, BBB, CCC, and 8 do not embody the structure, function and mode of operation of the Jardine patent in suit."

and in not sustaining plaintiffs' exception (No. 46) to the aforesaid finding of fact No. 39.

45. The Court erred in approving and adopting the Special Master's finding of fact No. 44 and in not sustaining plaintiffs' exception (No. 55) to the following statements and conclusions in finding of fact No. 44:

(a) "* * * that the prior art requires restriction of the patent (Jardine) to the employment of webs which are of sufficient lengths and thinness to permit flexing of these webs at the top of the skirt;

(b) That Ex. 1 does not employ such characteristic webs;
(c) that Ex. 8 does not employ such characteristic webs;
(d) that Exs. BBB and CCC employ no webs at all."

46. The Court erred in approving and adopting the Special Master's conclusion of law No. 38,

[fol. 2374] "That defendants' pistons, Exs. 1, BBB, CCC and 8 do not infringe the Jardine patent in suit."

and in not sustaining plaintiffs' exception (No. 90) to the aforesaid conclusion of law No. 38.

Group E

Assignment of errors relating to validity of the Maynard patent No. 1,655,968.

Assignments 47 to 56, inclusive, same as 45 to 54, inclusive, in case 4045 (R. pp. 1243 to 1245).

Group F

Assignment of errors relating to infringement of Maynard patent in suit.

Assignment 57 same as 55 in case 4045 (R. p. 1245).

58. The Court erred in approving and adopting the Special Master's finding of fact No. 40,

"That defendants' pistons, Exs. 1, BBB, CCC do not embody the structure, function and mode of operation of the Maynard patent in suit."

and in not sustaining plaintiffs' exception (No. 48) to the aforesaid finding of fact No. 40.

59. The Court erred in approving and adopting the Special Master's finding of fact No. 45 and in not sustaining plaintiffs' exception (No. 56) to the following statements in the Special Master's finding of fact No. 45:

(a) "That the Maynard patent in suit describes a piston structure in which automatic compensation is not secured unless the groove E is cut into the webs F sufficiently and beyond the inside of the piston head flange to secure web extensions at the top of sufficient length and thinness to permit flexing of these web extensions at the top of the skirt;

(b) that Ex. 1 does not employ such characteristic webs; and

(c) that Exs. BBB and CCC employ no webs at all."

60. The Court erred in approving and adopting the Special Master's conclusion of law No. 39,

"That the defendants' pistons, Exs. 1, BBB, CCC do not infringe the Maynard patent in suit."

and in not sustaining plaintiffs' exception (No. 91) to the aforesaid conclusion of law No. 39.

[fols. 2375-2378] Group G

Assignment of errors relating to validity of Mooers patent No. 1,402,309.

Assignments 61 to 68, inclusive, same as 59 to 66, inclusive, in case 4045 (R. pp. 1246 to 1247).

Group H

Assignment of errors relating to infringement of Mooers patent in suit.

Assignment 69 same as 67 of case 4045 (R. p. 1248).

70. The Court erred in approving and adopting the Special Master's finding of fact No. 41,

"That defendants' pistons, Exs. 1, BBB, CCC, 3-O, 8 and 9 do not embody the structure, function and mode of operation of the Mooers patent in suit."

and in not sustaining plaintiffs' exception (No. 50) to the aforesaid finding of fact No. 41.

71. The Court erred in approving and adopting the Special Master's finding of fact No. 46 and in not sustaining plaintiffs' exception (No. 57) to the following statements and conclusions included in the Special Master's finding of fact No. 46:

(a) "* * * that the prior art requires such a restriction; (of the connectors from the head to the top of the skirt in the Mooers patent to narrow connectors of restricted cross sections);

(b) that in Exs. 1, BBB, CCC, 3-O, 8 and 9 the connectors are heavy and not of a structure as described in the Mooers patent * * *."

72. The Court erred in approving and adopting the Special Master's conclusion of law No. 40:

"That defendants' pistons, Exs. 1, BBB, CCC, 3-O, 8 and 9 do not infringe the Mcoers patent in suit."

and in not sustaining plaintiffs' exception (No. 92) to the aforesaid conclusion of law No. 40.

Remaining groups and Assignments 73 to 83, inclusive, same as 71 to 81 of case 4045 (R. pp. 1249 to 1250).

[fol. 2379] PROCEEDINGS IN THE UNITED STATES CIRCUIT COURT OF APPEALS FOR THE SIXTH CIRCUIT

CAUSES ARGUED AND SUBMITTED—May 4, 1937

(Before Hicks, Simons and Allen, JJ.)

These causes are argued by Newton D. Baker and F. O. Richey for Appellants and by J. H. Bruninga and J. H. Sutherland for Appellees and are submitted to the court.

Decree—#7223—Entered October 8, 1937

Appeal from the District Court of the United States for the Northern District of Ohio.

This cause came on to be heard on the transcript of the record from the District Court of the United States for the Northern District of Ohio, and was argued by counsel.

On Consideration Whereof, It is now here ordered, adjudged and decreed by this Court that the decree of the said District Court in this cause be and the same is hereby set aside and the cause remanded for the entry of a decree granting the usual relief of injunction and accounting in [fol. 2380] respect to the infringement of claims 1, 11, 12, 13, 15, 18, 30 and 33 of Gulick, and claims 1, 6 and 8 of Maynard patent, which claims are valid and infringed by the Sterling piston, exemplified by Exhibit 1, and dismissing the bill with respect to the alleged infringements of Jardine, Mooers and Schmiedeknecht without prejudice. Costs of the appeal will be borne by the defendant.

Decree—#7224—Entered October 8, 1937

Appeal from the District Court of the United States for the Northern District of Ohio.

This cause came on to be heard on the transcript of the record from the District Court of the United States for the Northern District of Ohio, and was argued by counsel.

On Consideration Whereof, It is now here ordered, adjudged and decreed by this Court that the decree of the said District Court in this cause be and the same is hereby set aside and the cause remanded for the entry of a decree granting the usual relief of injunction and accounting in respect to the infringement of claims 1, 11, 12, 13, 15, 18, 30 and 33 of Gulick, and claims 1, 6 and 8 of Maynard pat-

ent, which claims are valid and infringed by the Sterling [fol. 2381] piston, exemplified by Exhibit 1, and dismissing the bill with respect to the alleged infringements of Jardine, Mooers and Schmiedeknecht without prejudice. Costs of the appeal will be borne by the defendants.

Decree—#7225—Entered October 8, 1937

Appeal from the District Court of the United States for the Northern District of Ohio.

This cause came on to be heard on the transcript of the record from the District Court of the United States for the Northern District of Ohio, and was argued by counsel.

On Consideration Whereof, It is now here ordered, adjudged and decreed by this Court that the decree of the said District Court in this cause be and the same is hereby set aside and the cause remanded for the entry of a decree granting the usual relief of injunction and accounting in respect to the infringement of claims 1, 11, 12, 13, 15, 18, 30 and 33 of Gulick, and claims 1, 6 and 8 of Maynard patent, which claims are valid and infringed by the Sterling piston, exemplified by Exhibit 1, and dismissing the bill with respect to the alleged infringements of Jardine, Mooers and Schmiedeknecht without prejudice. Costs of the appeal will be borne by the defendants.

[fol. 2382] OPINION—Filed October 8, 1937

[fol. 2383] Nos. 7223-4-5

UNITED STATES CIRCUIT COURT OF APPEALS, SIXTH CIRCUIT

No. 7223

THE CLEVELAND TRUST COMPANY, CHRYSLER CORPORATION, Appellants,

v.

THE SCHRIBER-SCHROTH COMPANY, Appellee

No. 7224

THE CLEVELAND TRUST COMPANY, CHRYSLER CORPORATION, Appellants,

v.

THE ABERDEEN MOTOR SUPPLY COMPANY, Appellee

No. 7225

THE CLEVELAND TRUST COMPANY, CHRYSLER CORPORATION, Appellants,

v.

THE F. E. ROWE SALES COMPANY, Appellee

Appeals from the District Court of the United States for the Northern District of Ohio, Eastern Division

Decided October 8, 1937

Before Hicks, Simons and Allen, Circuit Judges

SIMONS, Circuit Judge:

In a study of the patents and prior art involved in Waukesha Motor Co. v. Willys Overland, Inc., 77 Fed. (2d) 906, and The Perfect Circle Co. v. Hastings Mfg. Co., 88 Fed. (2d) 813, we learned something of the principles of operation and the mechanics employed in the conventional four-cycle internal combustion engine of the modern motor car. [fol. 2384] It will therefore be unnecessary here to repeat what was there said in reference thereto. In the first we con-

sidered the explosion chamber, and in the second the piston ring. In the present infringement suit we deal with the piston.

In the rapid reciprocation of a piston within the cylinder, as in the references described, the desirability of maintaining a close fit was obvious and had long been recognized. This was necessary to avoid waste of power through gases being permitted to pass below the piston from the explosion chamber, a condition known as "blow-by," to prevent lubricating oil passing above the piston into the explosion chamber, a condition known as "pumping oil," and to prevent the slapping of the piston in the cylinder, making for a noisy engine and tending to break its parts. On the other hand a too close fit would, because of the expansion of the piston by the great heat generated in the cylinder, cause it to bind or "seize" therein, thus stalling the engine or perhaps even wrecking it.

Cylinders were and generally still are cast of iron, and prior to the period we are here considering pistons were likewise so cast. The disadvantages in this organization were early recognized. Since iron is a poor conductor of heat, the particles of carbon that would form on the cylinder head woud become overheathed and cause premature explosion in the combustion chamber. Iron is also heavy, and with the great acceleration of piston reciprocation, due to the ever increasing demand for speed, the industry began to cast about for expedients to lighten the pistons. There were numerous efforts and failures in this respect with the conventional iron trunk piston. Lighter metals were considered, but since strength and durability to withstand the great force of rapid explosions upon the piston head and the powerful thrust imparted to its bearing faces by the power stroke of the piston as it imparted energy to the crank shaft were prerequisites, the art was limited to metal that was both strong and durable. It turned, therefore, quite naturally and inevitably, to aluminum. A new and for a long time seemingly insuperable problem at once confronted the automotive engineers, due to the fact that the coefficient of expansion differs greatly in the two metals, and that under heat aluminum will expand much more rapidly than iron. Since the desirable clearance is minute, approximately one one-thousandth of an inch, it was at once clear that an aluminum piston, installed when cold with required clearance in an iron cylinder, would when heated

by operation seize, and that a piston with clearance suffi-
[fol. 2385] cient to avoid seizing would waste power, pump oil, cause undesirable noises, and lack durability.

Ingenious, numerous and varied were the expedients resorted to in an effort to achieve the clearly recognized advantages of aluminum pistons, while at the same time avoiding troublesome results, and equally numerous were the failures, by reason of which a prejudice had developed in the industry against them, and it was said they had had a "black eye."

The Cleveland Trust Company, appellant, is the repository of numerous patent rights assigned to it by inventors and by piston and automobile manufacturers, and it is its contention that the aluminum piston problem was completely solved by some of its assignors, and that a structure embodying the disclosures of the patent to Jardine, No. 1,763,523, granted June 10, 1930, but in a more specific and improved form described in Maynard No. 1,655,968, granted January 10, 1928, but on an application later than Jardine's, had gone into wide commercial use, being accepted by the industry, with the exception of some divisions of the General Motors Corporation, had sold in the tens of millions, and is now infringed by pistons of the appellees. The Jardine and Maynard patents belong to the Trust Company. Conceiving, however, that a Gulick application, which was being prosecuted by the Packard Motor Car Company, would, with its broader claims, dominate both Jardine and Maynard, the Trust Company purchased it and prosecuted it to successful conclusion after numerous interferences, the patent issuing as Gulick No. 1,815,733, on July 21, 1931. The Trust Company also owns Schmiedeknecht patent No. 1,256,265, granted February 12, 1918, and Mooers, No. 1,402,309, granted January 3, 1922, both for pistons, and seven accused devices are all alleged to infringe some of the claims of some or all of the five patents.

The appellees are three Cleveland dealers who have sold alleged infringing pistons manufactured by the Sterling Products Corporation of St. Louis, Missouri. While the manufacturer was named in the original bills of complaint, they were dismissed as to it, it being understood, however, that Sterling Products Corporation was conducting the defense of the three suits. By stipulation they were consolidated below, and all are before this court upon the same record. At the outset only two alleged infringing devices were

involved, one a Sterling piston known as Exhibit 1, and the other a Ray-Day piston known as Exhibit 8. During the progress of the trial five additional structures were introduced as infringements. While there is no finding to that [fol. 2386] effect, it seems to have been assumed that all of the alleged infringing devices were sold by each of the three defendants. The consolidated cause was referred to a master, whose very detailed findings of fact and conclusions of law were affirmed by the District Judge without discussion and decrees entered dismissing the bills. While the Chrysler Corporation appears as party plaintiff below and as co-appellant here, it has never entered its appearance and its presence in the case as a nominal plaintiff is due to the fact that it owns a half interest in the Maynard patent and was therefore joined as party plaintiff. An issue raised below as to the propriety of Chrysler being made a nominal party is abandoned here, since the defendants have not appealed.

The controversy is involved and has been bitterly fought. The record is voluminous, the exhibits, physical and otherwise, numerous, the patent office history discloses persistent challenge, and of eighty-odd claims fifty-two are said to be infringed. While we have given careful consideration to the briefs and record, it is manifest that the necessities of the case and the desirable limit of an opinion will permit us to discuss only the more salient features of the controversy, with perhaps summary disposition of its lesser issues, for the challenge to the validity of the patents and to the fact of their infringement includes most if not all of the defenses known to the patent law.

We deal first with the patent to Gulick, in agreement with the contention that if valid it is basic. Gulick had been connected with various motor car and motor cycle manufacturing companies in a number of capacities, including that of factory manager. He was also an inventor, having prosecuted some fifty applications in the patent office. As early as 1908 he had a conception of a split and flexible piston, but did nothing more for several years than to make sketches. In 1911 he made some experiments with modified standard iron pistons, giving them block tests in a motor cycle and in an Excelsior motor. The motor was later put into a Renault car and given a substantial road test. These early pistons were scrapped. In 1914 he made his first test with aluminum pistons in an Amplex car, which he

used personally for some 4500 to 5300 miles. In 1917, along with other patents and patent applications, Gulick assigned his inchoate rights to the Packard Motor Car Company, and the application for the piston patent was filed by it on November 30th of that year. There followed long discussions with the examiners, administrative reviews, bitterly contested interferences, and appeals to the Court of Ap- [fol. 2387] peals of the District of Columbia (Long v. Gulick, 17 Fed. [2d] 686), and to the Court of Customs and Patent Appeals (Hartog v. Long, 47 Fed. [2d] 369). There had also been amendments to the original application at the instance of the inventor's assignee. It was not until July 21, 1931, that the Gulick patent issued with its forty-three claims.

The Gulick patent is for a combination of elements, many, if not indeed all of which, are to be found in the prior art. Nowhere, however, is found his precise organization, and the question at once presents itself as to whether there was exercise of the inventive faculty in the concept of their combination, for that a new result was achieved and a new mode of operation of an aluminum piston in its iron cylinder brought about is not successfully challenged on this record. Gulick separated the smaller ring carrying head of the piston from the somewhat larger skirt by a groove or air gap. This tends to prevent the passage of heat from the head directly to the skirt and permits the bearing faces of the skirt to yield to pressure independently of the head. The wrist pin bosses are pulled inwardly from the skirt periphery, and instead of being supported by the skirt are carried from the piston head by depending flanges, thus providing a vertically rigid support for the bosses with freedom of lateral motion in a direction at right angles to the load thrusts on the piston. The surface of the skirt where the bosses are connected to the head in conventional pistons was cut away or relieved, so that the bosses are not directly constrained by the cylinder wall. They are held in place by webs extending in the general direction of load thrusts on the piston. One bearing face of the skirt is slotted vertically from the bottom edge up to and connecting with the air gap. That Spillman and Mooers patent 1,092,870, and Franquist patent 1,153,902 showed air gaps between piston head and skirt, or that splitting the piston skirt vertically or combining the vertical and longitudinal splits into the

so-called T-slot were old practices, is not conclusive on the question of invention.

Since the cylinder head is the first to heat, and becomes hotter than the skirt it had always been machined with greater clearance, the control of oil and gas flow being taken care of in part at least by the piston rings, which function as a packing. See Perfect Circle Co. v. Hastings, supra. The problem of maintaining a close fit between an aluminum piston and an iron cylinder without seizing under heat expansion is a problem involving the skirt, which guides the [fol. 2388] piston and carries the bearings for the wrist pin, upon which is exerted the thrusts of the connecting rod through the cycle of reciprocation. To decelerate the flow of heat from piston head to skirt by an air gap was perhaps an obvious expedient in the art. To slit the skirt vertically so that pressure of the cylinder wall would compensate for thermal expansion was perhaps not beyond expected skill in the art. Minute relief of the cylinder periphery in the region of the bosses was shown in Franquist. But to combine insulation of head from skirt, retraction of the bosses from the skirt periphery, connection of such bosses to the skirt with webs laterally flexible and yet so carried from the head as to support the load upon the wrist pin with sufficient strength and rigidity, and to utilize the mechanical force of the cylinder wall upon the skirt and the thermal expansion of the bosses so as to compensate evenly and fully for head expansion and to secure a balanced flexibility of the skirt with no bending concentration at any point therein, discloses, we think, a meritorious concept beyond the reach of those skilled in the art. Franquist, of course, does disclose the broad concept of a flexible skirt. But Franquist gives no hint at all of the Gulick invention. His flexibility was obtained by grooves on the accordion principle, which while they interrupted the outer periphery of the piston skirt, did not destroy its inner unity. Some flexibility no doubt it had, but certainly not in the sense that Gulick disclosed it, and it is doubtful that the Franquist piston could have met the severe tests required by the industry. And of commercial history it has none upon this record.

Probably the most difficult task that confronts a patent court lies in determining whether there is invention in a combination whereof many or all cooperating elements are old, and when concepts, however remarkable when disclosed, have in a rapidly developing art already become common-

place, not only to the expert but to the unskilled. It is not easy after the lapse of years to evaluate advances with the "eye and the understanding" of those in the field when they were made. Inventive concept is an abstraction impossible to define, and so courts have sought for simple rules by which its presence may be detected. These have proved helpful, even though never absolute. Long recognition of an existing problem in any art, and the advantages to accrue to an industry from its solution, coupled with repeated failures to find solution, has ever been considered as highly persuasive of invention when success is finally attained. Sometimes achievement is revolutionary, an abandonment of all previous approaches, and the charting of a new way [fol. 2389] to the goal. More often the inventor begins where others leave off, and perceives the vital forward step to which predecessors had been blind. Even then success may not be fully recognized until the world gives acclaim.

The present record is conclusive of the long unsuccessful search for a light weight piston sufficiently durable to obviate the well-known disadvantages of the iron trunk piston in high speed engines. There was much research and experimentation by those most highly skilled, including the engineers of the Aluminum Company, Colonel Vincent of the Packard Motor Car Company, one of the designers of the Liberty engine, and the engineering staff of the Franklin Automobile Company, under the direction of the defendants' expert Stellman, its Chief Engineer. Limited success may here and there have been attained, but the problem in its full sweep was not solved until the Gulick concept, carried forward to some extent by Maynard, with possibly some instruction from Jardine, reached commercial embodiment. Then and then only did the industry, by acceptance of the Aluminum Company's piston answering the Maynard drawing and specification, recognize the complete solution of the problem, and the many millions that have since been sold and used have set the seal of commercial approval upon such solution. It is idle to say in an imperfect world that invention should be denied because no piston, not even Maynard, performs perfectly.

It is, of course, axiomatic that commercial success is not of itself conclusive upon the question of novelty or invention, and where such success is fairly attributable to other causes, such as the reputation of the manufacturer, his extensive advertising and superior salesmanship, it will be

wanting in persuasiveness. But where no alternative inferences are to be drawn, commercial success is highly indicative of invention. This is so in the usual case where the test of success is acceptance by the public. But it must be here noted if not elsewhere observed, that where success follows acceptance by experts rather than by those unskilled, it is of far greater tribute to the ingenuity of the inventor. It is clearly demonstrated upon this record, if indeed it is not within the field of general knowledge, that the automotive industry in acceptance of new devices upon which success of highly complicated and delicate machinery in the hands of inexpert users must depend, exercises the greatest caution, and things new, whatever their theoretical virtue, will not be considered until they have been subjected to the most rigorous practical tests for efficiency and durability. [fol. 2390] This must be so when failure of one year's product may bring tremendous losses or complete disaster.

So also with respect to the presumption that attaches to the validity of a grant by the Patent Office. Where, as in this case, substantially all pertinent prior art has been cited against the patent, where in hard fought interferences novelty and invention have been challenged, and where priority of conception has been finally adjudicated only upon repeated review in both administrative and judicial forums, the patent should not be stricken down except upon very clear and convincing proof of invalidity. The weight to be given this presumption has been so recently and so thoroughly discussed, and the rule stated in all the varying formulae by which courts have announced and affirmed it, in Radio Corporation v. Radio Laboratories, 293 U. S. 1, that it is unnecessary here to repeat or to cite additional cases.

In what we have said thus far it is perhaps clear that in respect to novelty and invention over recorded prior art we have concluded the Gulick patent to be valid. But this is not the whole controversy with respect to it. It is the contention of the defendant that the Gulick patent is invalid because abandoned by him prior to his application, and because it had been in public use in this country for more than two years before such application within the purview of R. S. §§ 4886, 4920. The Master so held. His findings were based on the fact that Gulick's 1911 and 1914 pistons had been scrapped, and on inference that Gulick's expressed satisfaction with his 1914 experimentation was conclusive

of the completion of his invention in that year. That there had been no formal abandonment or disclaimer is clear. The Master's findings are based upon constructive abandonment deduced from the above circumstances and delay in applying for a patent.

Questions relevant to actual or to constructive abandonment of inventions are questions of fact, Walker, 6th Ed., § 152; Kendall v. Winsor, 21 How. 330, and much weight must therefore be given to the findings of the Master, who saw and heard the witnesses. Consideration should also be given to the rule that concurrent findings of Master and Judge should not be set aside except for clear error, although this may prove to be an unsafe guide to just decision where exceptions to a Master's report are unilluminated by oral argument and a decree entered without elucidation of the reasons upon which it is based. The law, however, in reference to abandonment, requires that every reasonable doubt relevant to any such question should be resolved in [fol. 2391] favor of the patent, for it does not favor forfeiture. Walker, § 152 and cases there cited. It was said by this court, Gear Grinding Machine Co. v. Studebaker Corp., 270 Fed. 934, 936: "Abandonment depends upon intent, actual or imputed. The actual intent did not exist, and the circumstances do not require that the intent be by law imputed as against the truth." That Gulick did not intend to abandon the subject matter of his invention seems to us clear. From the beginning of his experimentation in 1911 he made drawings from time to time, tests with slotted iron pistons and later with slotted aluminum pistons, and was at the same time not only busy in the earning of a livelihood but with plans for the purchase from a receiver of the property of the Amplex Motor Car Company. The scrapping of his experimental pistons was without his knowledge or consent, and the fact that he replaced the experimental pistons of the Renault car with standard pistons before its sale negatives any inference that the experimental pistons were intended to be abandoned. Distinction must also be made between abandonment of the subject matter of a patent and abandonment of crude experimental devices. While Gulick variously expressed satisfaction with the performance of his experimental pistons, it is clear upon review of his entire evidence that what he had then in mind was that they performed satisfactorily in reference to clearance. They had not demonstrated their strength and durability,

or that they were properly designed or machined for commercial use.

The Master was largely influenced by the fact that Gulick's clarification of his testimony followed a recess, and gave little credence to it. We have reviewed it carefully. That Gulick's experiments were not completed to the end that a practical piston had been fully designed and tested seems clear. He is in some respects corroborated and in no wise impeached. Mere suspicion as to his good faith is not such clear and convincing proof of abandonment as will satisfy every reasonable doubt and sustain the heavy burden which rests upon those challenging the validity of his patent. The Master did not apply to the evidence on the issue of abandonment that standard of proof required to establish it and so the question is one of law, and the finding must be rejected.

There was no public use of the Gulick invention more than two years prior to the application so as to invalidate the patent. So long as use by the inventor can fairly be considered experimental and collateral to the development of the invention in its complete form, the bar of the statute does not begin to run. Reo Motor Car Co. v. Gear Grinding Co., 42 Fed. (2d) 965 (C. C. A. 6). The emphasis that [fol. 2392] is laid upon Gulick's use of a car with experimental pistons for business and pleasure for a considerable period does not impress us. Road tests of many thousands of miles are considered necessary to determine the efficiency of an engine and its parts. That such transportation is not wasted does not of itself constitute a public use. As was said in the second Gear Grinding case: "We see no principle in the precedents or in the policy of the statute which would require a valuable invention to be lost by permitting the bar to begin to run while the invention * * * is being gradually improved and developed up to the point of ascertaining whether it has real utility. Nor can it rightly be said that a public use of a developing and incomplete invention—incomplete as finally claimed—can nevertheless operate as a public use bar because adding the final element of perfection did not involve invention as compared with the earlier form to which it was added."

We are not convinced that the Gulick application was broadened to include new matter after intervening rights had arisen. This issue was adjudicated in the Court of Appeals of the District of Columbia, 17 Fed. (2d) 365, and

the Court of Customs and Patent Appeals, 47 Fed. (2d) 366, 367. With the conclusions there reached we agree. As to the Monckmeir and Schoengarth prior uses, it is sufficient to say without analysis of the voluminous evidence, that they rest mainly upon the uncertain memory of witnesses testifying long after the event, and this does not rise to the dignity of proof requisite to establish prior use. Barbed Wire Patent Case, 143 U. S. 275; Eibel Process Case, 261 U. S. 45.

Jardine, upon an application filed March 11, 1920, claimed an invention of which the chief object was construction of a light alloy piston which would operate satisfactorily at all temperatures and lend itself to economic methods of manufacture. He cut away all the skirt portions of the webs, extending the latter to nearly the length of the skirt parts or slippers. Horizontal slots partially insulated the slippers from the head and these were split vertically to render them yieldable to contact with the cylinder wall. The head was integrally connected to the skirt only in the region above the bosses. His thought was that since heat expansion tends to increase the diameter of the piston in a direction parallel with the wrist pin bosses, when the skirt around the bosses is removed, the central part of the web is free to move while its ends are restrained and resisted by the skirt faces in contact with the cylinder wall. There is insistent challenge and as insistent defense of the valid-[fol. 2393]-ity of Jardine. On the one hand it is urged that Jardine is but the slipper structure of Ricardo patent No. 1,294,833, and that it involved no invention to merely slit vertically its skirt parts as disclosed by Gulick and others. The response is that Jardine discloses a combination of inter-related operating parts that goes far beyond Ricardo, is economical to construct and carries the Gulick concept an important step forward. Jardine indicates the forces, thermal and mechanical, which bear upon the flexible web to compensate for heat expansion of the cylinder head, pointing to the web as being in effect a cantilever structure, weakest at its supports. Jardine came to the attention of the Aluminum Company and the Maxwell at a time when Ricardo and other English engineers were trying to modify the Ricardo piston to meet the piston problem. It was thought to give great promise. Tests had been made and commercial manufacture planned when the Maynard piston was presented to them. It appeared so much better that

the construction illustrated and described by him was adopted. Since it is the Maynard specific form embodying the basic concept of Gulick that made commercial piston history, since Jardine was without substantial commercial recognition and none of the accused devices are slipper pistons, since whatever Jardine contributed to the art, if anything, is said to be incorporated in Maynard and since the really important infringement is said to be the copying by the defendants of the commercial embodiment of Marynard, we feel under no necessity at this time of ruling upon the validity of the Jardine patent or the fact of its infringement.

Maynard upon a patent application filed January 3, 1931, embodies the Gulick combination of skirt insulation, skirt flexibility by means of vertical slotting cooperating with longitudinal slotting, and flexible webs in the region of the wrist pin bosses. He also follows Jardine's simplified design to permit economical manufacture and Jardine's boss relief. The Maynard piston, however, is not a slipper piston. While Jardine carried the webs nearly to the bottom of the skirt and omitted all of the skirt on the web faces, Maynard provided webs about two-thirds of the length of the skirt and continued the latter circumferentially below the webs except for a single vertical slot throughout one bearing face of the skirt. This structure increased the effect of heat on retarding the expansion of the piston so as to permit of a narrowed web. The upper part of the skirt, which reaches higher temperature, is provided with greater compensation against heat expansion by having its [fol. 2394] periphery interrupted by relief about the bosses. The lower part of the skirt requires no interruption of its periphery other than the vertical slot because it receives less heat. This results in a better bearing surface and means additional to the piston rings for closing the passage between the piston and the cylinder wall. It is clear that Maynard, while not departing from the teaching of Gulick in basic combination of elements, discloses a piston lighter and more economical of manufacture than Gulick and one more rugged and durable than Jardine. That the Maynard piston had a very great effect upon the industry and substantially advanced the art, there can be no doubt upon this record. In the precise form disclosed by Maynard and depicted in his drawings, many thousands were

made and successfully used. In a somewhat modified form its production and use has run into very many millions.

Little is claimed for Mooers and Schmiedekneeht, and while some of the claims of each may possibly read on some of the accused structures, they have apparently no commercial history and have not substantially advanced the art. We do not pass upon them, and apprehend that the real controversy here is in respect to validity and infringement of Gulick and Maynard.

Of the devices charged to infringe, the one of prime importance to the plaintiff is undoubtedly the Sterling piston, exemplified by Exhibit 1. The defendants seek to avoid infringement by this structure, which with slight modification, follows the drawings and description of the Maynard patent, and without change, the commercial structure of the plaintiff's licensee, by the contention that its webs are rigid at the top and thus it is distinguished from Maynard, compensation for rigidity being achieved by reducing the thrust faces of the piston skirt at an angle to the vertical sides of the web, giving to the relief in the region of the bosses the so-called "keystone" configuration. But there are no limitations in the claims in suit as to the region of flexibility in the webs, and if the keystone relief provides greater flexibility at the union of the webs with the skirt, it is but a difference in degree, and not one of mode of operation or result and will not avoid infringement. In comparing commercial embodiments of invention with the drawings of patents it is not unusual to find that without departing from the teachings of the inventor improved operation may result from some modification of the disclosure. This court has indicated, Gordon Form Lathe Co. v. Walcott Machine Co., 32 Fed. (2d) 55, 61, that superiority of operation, even when brought about by a valuable improvement [fol. 2395] which perhaps was patentable as such, will not of necessity negative infringement, citing Schiedel Toy, etc., Co. v. Clark, 217 Fed. 760, 771, Toledo Machine & Tool Co. v. E. W. Bliss Co., 287 Fed. 443, 447. The Gordon and Redlin patent there considered was in a true sense a pioneer patent and entitled to broad equivalents, but this does not mean that meritorious inventions which substantially advance the art are entitled to no reasonable range of equivalency. As was said in Eibel Process case, supra, at 63: "Eibel made a very useful discovery which has substantially advanced the art. His was not a pioneer patent

creating a new art; but a patent which is only an improvement on an old machine may be very meritorious and entitled to liberal treatment. Indeed, when one notes the crude working of machines of famous pioneer inventions and discoveries, and compares them with the modern machines and processes exemplifying the principle of the pioneer discovery, one hesitates in the division of credit between the original inventor and the improver; and certainly finds no reason to withhold from the really meritorious improver, the application of the rule *'Ut res magis valeat quam pereat'* which has been sustained in so many cases in this court." A careful consideration of the patents to Gulick and Maynard, an analysis of the claims of each in suit, and a review of the evidence as to principles and modes of operation, lead us inevitably to the conclusion that the Sterling piston (Exhibit 1) infringes the claims in suit of both, and that such minor differences as appear in the commercial embodiment of Maynard, with which Exhibit 1 is identical, do not fall without the reasonable range of equivalents to which the inventors' contribution to the advancement of the art entitle them.

In the remaining accused devices we find no infringement. True, there is similarity. Here and there are identical elements, singly and in combination, but the complete combination upon the conception of which we found Gulick and Maynard to denote invention, does not in any others appear, and so it must be said here as in Gear Grinding Machine Co. v. Studebaker Corporation, supra, in reference to such situation: "It is the patentee's necessary dependence upon the co-operation of all the elements in one machine in order to make the claims valid that also makes this achievement possible."

We find claims 1, 11, 12, 13, 15, 18, 30, 33 of Gulick and Maynard patent in respect to all of the claims sued upon valid. We find such claims to be infringed by the Sterling piston exemplified by Exhibit 1. The decrees below are set aside and the causes remanded for the entry of decrees [fol. 2396] granting the usual relief of injunction and accounting in respect to such infringement as has been found and dismissing the bills with respect to the alleged infringements of Jardine, Mooers and Schmiedeknecht, without prejudice. Costs of appeal will be borne by the defendants.

[fol. 2397] CAUSES ARGUED AND SUBMITTED—April 7, 1939

(Before Hicks, Simons and Allen, JJ.)

These causes are argued by Arthur C. Denison and F. O. Richey for The Cleveland Trust Company and Chrysler Corporation, and by John H. Sutherland and John H. Bruninga for The Schriber-Schroth Company, The Aberdeen Motor Supply Company and The F. E. Rowe Sales Company, and are submitted to the court.

DECREE #7223—Entered October 6, 1939

Appeal from the District Court of the United States for the Northern District of Ohio.

This cause came on to be heard on the transcript of the record from the District Court of the United States for the Northern District of Ohio, and was argued by counsel.

On Consideration Whereof, It is now here ordered, adjudged and decreed by this Court that the decree of the said District Court in this cause be and the same is hereby reversed and remanded for further proceedings in conformity with the opinion of this court.

[fol. 2398] DECREE #7224—Entered October 6, 1939

Appeal from the District Court of the United States for the Northern District of Ohio.

This cause came on to be heard on the transcript of the record from the District Court of the United States for the Northern District of Ohio, and was argued by counsel.

On Consideration Whereof, It is now here ordered, adjudged and decreed by this Court that the decree of the said District Court in this cause be and the same is hereby reversed and remanded for further proceedings in conformity with the opinion of this court.

DECREE #7225—Entered October 6, 1939

Appeal from the District Court of the United States for the Northern District of Ohio.

This cause came on to be heard on the transcript of the record from the District Court of the United States for the Northern District of Ohio, and was argued by counsel.

On Consideration Whereof, It is now here ordered, adjudged and decreed by this Court that the decree of the said

District Court in this cause be and the same is hereby reversed and remanded for further proceedings in conformity with the opinion of this court.

[fol. 2399] Opinion—Filed October 6, 1939

[fol. 2400] [Stamp:] Filed October 6, 1939. John W. Menzies, Clerk

Nos. 7223-24-25, 8094-95-96

United States Circuit Court of Appeals, Sixth Circuit

No. 7223

The Cleveland Trust Company, Chrysler Corporation, Appellants,

v.

The Schriber-Schroth Company, Appellee

No. 8094

The Schriber-Schroth Company, Appellant,

v.

The Cleveland Trust Company, Chrysler Corporation, Appellees

Appeals from the District Court of the United States for the Northern District of Ohio, Eastern Division.

Decided October 6, 1939

Before Hicks, Simons and Allen, Circuit Judges

Simons, Circuit Judge:

Our former opinion in this much litigated patent controversy involving automobile pistons is reported at 92 Fed. (2d) 330, under identical style, but including disposition of the companion cases brought by appellants against the Aberdeen Motor Supply Company, No. 7024, and the F. E. Rowe Sales Company, No. 7025. The Supreme Court, after denying certiorari and a petition for rehearing, received the

cases upon a second rehearing petition and reversed with remand to us for consideration of questions presented and not determined, Schriber-Schroth Co. v. Cleveland Trust [fol. 2401] Co., 305 U. S. 47; directions amended, 305 U. S. 573.[1] A second group of appeals (8094, 8095, 8096) from decrees against appellees in the first case, responsive to our decision therein, is now consolidated for consideration with the reconsideration required by the order of remand.

The claims of five patents, and a number of infringing devices, were in the first instance presented for adjudication. In their consideration we were greatly impressed by the story disclosed by the record of the long search and sustained effort on the part of exceptionally competent automotive engineers to completely solve the problem of a successful aluminum piston operating freely with minute clearances in an iron cylinder. There had been advances, "foreshadowing," perhaps, that solution would not always defy inventive genius, though on the whole the aluminum piston as heretofore noted had received a "black eye" in the industry. Much had been expected of a piston invented by one Jardine, and it was about to be put into commercial production when a design disclosed by Maynard, which seemed an improvement thereon, was produced by the appellants' licensee, was accepted by major companies in the industry, and went into use to the number of many millions. In analyzing the Maynard invention it appeared to us that however meritorious certain structural improvements might be, it nevertheless embodied the basic concept of the patent to Gulick owned by the appellant and in suit. We held certain claims of Gulick and Maynard to be valid and infringed without passing upon the intermediate disclosure of Jardine though recognizing that Jardine may have made substantial contribution to the art.

Observing that many if not all of the elements of the Gulick combination were old, we held his precise combination to be novel and to have the quality of invention, and that its reproduction by the appellees in the specific form disclosed

---

[1] The Supreme Court granted certiorari after twice denying it on the ground that conflict was improbable because of the concentration of the automobile industry in the Sixth Circuit. It might be interesting to explore the availability of the Declaratory Judgment Act to dealers in other circuits to raise conflict.

by Maynard was infringement of both. In a recital of the Gulick achievement in terms of elements, function and result, we assigned to the webs of Gulick the rigidity proclaimed by his specification in the dimension in which they furnished "a particularly strong support for the bosses," but a lateral flexibility in the dimension wherein rigidity appears not to have been required, where it would not serve [fol. 2402] the purpose announced, and where it would appear to interpose an obstacle to the expected functioning of a split skirt. There was assumption that since the specification was addressed to those skilled in the art, a purpose to provide a particularly strong support for the bosses was fully served by vertical rigidity, and made implicit in the original specification a lack of rigidity otherwise. With this view we found no difficulty in agreeing with the tribunals that sustained the Gulick amendment reciting lateral flexibility as mere clarification.

The Supreme Court, concluding that Gulick's failure to describe the flexible web element as a feature of his invention, and his failure in this respect to explain the principle of his machine so as to distinguish it from prior art, did not conform to R. S. Sec. 4888, held that his amendment added new matter beyond the scope of the device described in the application as filed, in consequence of which the appellant might take no benefit therefrom. Assuming that we sustained certain claims of his patent only by reading into them the flexible web element, it reversed our decision as to Gulick, and since Maynard neither claims nor describes flexible webs, it likewise reversed our decision as to its validity and infringement. Reciting, however, that since it had been thought by us that full recovery could be had by the appellants under the two patents adjudicated, we did not decide other questions involved in the appeals, it remanded the causes to us for further proceedings "with respect to such claims of the patents in suit as appellant below submitted to that court for adjudication." Upon petition for rehearing and clarification, it added to the direction for judgment the following: "On the remand the Court of Appeals will be free to consider whether the amendments to the Gulick application rendered void the patent issued upon it, and to consider all questions affecting the validity and infringement of the claims in suit of the Gulick and Maynard patents, but without including web flexibility or

laterally flexible webs as an element in the combinations patented by them."

Controversy has arisen over the scope of the remand, the appellees contending that we are precluded from consideration of the Jardine, Schmiedeknecht and Mooers patents since the bills stand dismissed as to them, albeit without prejudice, so that they may be brought to us for consideration only by new actions. The order of remand is, however, specific, requiring no interpretation. We are directed to take further proceedings with respect to such claims of the patents in suit as appellants submitted to us for adjudi- [fol. 2403] cation, not merely in respect to those adjudicated. The phrasing of the amended direction is one of enlargement and clarification and not of limitation. That decrees have been entered below dismissing the bills as to the three patents not considered is of no moment. These decrees are brought into question in appeals 8094, 8095 and 8096 here involved. If they are in conflict with conclusions now reached they must be set aside and our mandates recalled, just as they must be set aside as in conflict with decision above. We hold that the remand operates to reopen the entire cause except insofar as questions necessary to decision have been decided by the Supreme Court and insofar as our own conclusions have not there been held erroneous and so constitute the law of the case.

The first question that confronts us is in respect to the validity of the claims of the Gulick and Maynard patents as circumscribed since we are now obliged to consider them without reading into them web flexibility or laterally flexible webs as an element, and in this connection it seems immaterial whether we read an element into them, or merely construed an existing element as having in its environment a given characteristic. We recognized in our first opinion that Gulick was for a combination of elements, many if not all of which were old. Yet the combination appeared to us to be novel and to denote invention since a new result was secured in consequence of a nicely balanced flexibility of piston skirt, permitting successful operation at minute clearances without bending concentration at any point to impair ruggedness, and so distinguishing from Franquist and other pistons. In a case not free from doubt, since probably no one has seen an automobile piston reciprocating in its cylinder under operating conditions, the success of the commercial embodiment of Maynard, comprehending what was

then conceived to be Gulick's basic concept, after so much failure, clearly appeared to denote that somewhere was invention. But the Gulick conception as we then considered it was of balanced flexibility derived from interplay of yielding skirt periphery and flexing supporting webs in response to the mechanical force of the cylinder wall and the thermal expansion of the piston head. The combination we are now obliged to consider is one with rigid webs opposing their rigidity to the resiliency of a skirt slotted to accommodate itself to forces to which practically it may not yield. This is not the combination we held to be valid. It is not the combination to which those most captious and skilled in the [fol. 2404] industry gave tribute, to the end that all our doubt as to validity was resolved. We are constrained to hold all of the claims in suit of Gulick invalid as marking no inventive step over prior art. It therefore becomes unnecessary to consider whether his amendments voided his patent since the direction in this respect is but permissive and not imperative. It likewise becomes unnecessary to consider the effect of the disclaimer filed since decision above.

In Maynard there was no emphasis on rigidity of web construction such as was found by the Supreme Court in Gulick, but we are compelled nevertheless to view the Maynard combination as one failing to disclose cooperation of flexible webs with vertical and longitudinal slotting to secure the balanced flexibility conceived to reside in Gulick, and constituting therein a basic achievement and since it is apparent that details of construction recited by us as disclosing a piston lighter and more economical of manufacture than Gulick and more rugged and durable than Jardine made no impression upon the court as marking inventive steps over prior art, we are likewise constrained to hold the claims of Maynard in suit invalid.

In the conviction that the long search for a solution of the aluminum piston problem by engineers of great ability, their repeated failures, and the ultimate success of the Aluminum Company's commercial device point with persuasiveness to the fact that somewhere in the search one, with the spark of genius denied the skilled mechanic, contributed to the art the thought that brought achievement out of failure, we reconsider the Jardine patent, for though we are as sensitive as is the Court of Appeals of the Second Circuit [Buono v. Yankee Maid Dress Corp., 77 Fed. (2d) 274, 276], to "the high standard demanded for inven-

tion by the decisions of the Supreme Court in recent years," attested by many of our more recent decisions, yet we also share Judge Learned Hand's understanding that the Supreme Court has not departed from the principle that recourse must be had in doubtful cases to the history of the art for the interpretation of claims and the existence of invention.

The patent to Jardine, 1,763,523, was issued June 10, 1930, upon an application originally filed March 11, 1920, prior to the filing of the Gulick amendment in 1922, now held to be invalid. Jardine with great clarity and in precise detail explains the principle of operation of his machine and the flexibility of its webs. The knowledge that was not Gulicks or was by him concealed, is clear to Jardine and by him proclaimed. "The webs 6 and guide [fol. 2405] segments preferably are so designed that this displacement of the segment 10, 10^a, is permitted by virtue of a bending of the webs 6 at points remote from the guide segments. To this end, as shown in Fig. 4, the thickness of the guide segments is increased toward the webs 6 and the webs 6 are decreased in thickness from the guide portions inward toward the bosses to points in line with the inner ends of the slot 11^a. This gives in effect a cantilever structure weakest at its support. * * * Thus the reaction force of the cylinder wall on the outer faces of the guide segments as the piston expands tends to cause bending of the webs 6 along said line 13. Due to the bending of the web sections 6 and the forcing together of each pair of segments, the guide part of the piston may undergo a considerable thermal expansion without a corresponding increase in the outer diameter thereof and thus a small initial clearance can be used without danger of scoring or seizure of the piston."

Jardine is also the first to refer specifically to an "aluminum alloy piston," and he states that one embodying his invention "can be fitted to the engine cylinder with a very small clearance, and that compensation for the relatively large thermal expansion of the guide section of the piston is provided by the displacement of the guide segments which results from the reaction force of the cylinder wall on the outer faces of the guides." It is true that the drawings of Jardine depict what is known as the slipper type of piston, illustrated also in the patent to Ricardo, No. 1,294,833, but his invention is not limited to that type,

for he says: "It is to be understood that the invention is essentially applicable to other forms of construction."

While the specimen claims of Jardine 1, 8 and 11, though reciting the web as an element do not incorporate therein the property of flexibility, yet in the light of the description they must be so interpreted, for it is clear that the Supreme Court in reversing our decision departs not at all from the rule that claims must be read in the light of the specification, since it is pointed out with particularity in respect to Gulick that his specifications point to no inadequacy in the structure or function of webs of the prior art which would be remedied by the webs specified, and to no function to be performed by them other than as a means of connecting and holding head and skirt so as to maintain the air gaps between them and to support the wrist pin bearings. Jardine repels this criticism of the Gulick application. It is also pointed out that Gulick failed to explain [fol. 2406] the principle of his machine so as to distinguish it from the prior art. Jardine points to prior art failure. "I have found," he says, "that these difficulties can be overcome by constructing a piston with its skirt or guide portion supported and slotted or divided in a manner to permit deformation and deflection of parts thereof without interfering with the performance of the essential functions of the respective parts."

To invalidate Jardine the appellees rely mainly upon the Long piston and Long's patent No. 1,872,772, upon an application prior to Jardine's, and emphasis is placed upon the observation of the court to the effect that the Long piston, with webs concededly flexible laterally, was in commercial use in 1922. This brings us to a consideration of the contention, vigorously urged by the appellants, that the Supreme Court having applied to the sufficiency of disclosures made by Gulick and Maynard the so-called strict rule of construction, an equally strict rule must be applied to prior art. To this the appellees reply that there is a distinction between the teachings of a prior art patent or publication and a prior use. They concede that the description in patent or publication must be complete when read in connection with the prior art as one skilled in the art would read it, but urge that when it comes to a prior use, and an article is in existence so that it may be duplicated, it is immaterial whether those skilled in the art knew or were unaware of its characteristics.

Recognizing distinction between what may be disclosed in a patent and what may appear to the understanding of those skilled in the art when it reaches commercial embodiment and so may be physically reproduced, yet it would seem to us that nothing is prior art, at least in respect to function, unless its function is understood by those skilled in the art. Otherwise there would be little support in reason for the rule that novelty is not negatived by any prior accidental occurrence or production the character and function of which was not recognized until later than the date of the patented invention sought to be anticipated thereby, 1 Walker, 6th Ed. Sec. 106, or the further rule that novelty is not negatived by anything which was neither designed nor apparently adapted, nor actually used, to perform the function of the thing covered by the patent, Idem, Sec. 107. Nor is the observation of the court that a Long piston was in commercial use in 1922, the webs of which were concededly flexible, to be taken as a conclusion that the webs were flexible in use or that their flexibility, cooperating with [fol. 2407] other resilient elements, was then understood, however clear it may later have come to be. The Long patent did not disclose flexible webs. Since the argument that the webs of Gulick were laterally flexible to the understanding of those skilled in the art was rejected, so must we reject inference that prior to Jardine the art understood the webs of Long to be flexible in the absence of clearly convincing evidence that they were known to have that quality. Moreover, the Long patents recite that the separated portions of the skirt are rigidly held against bending to the forcing thrust of the piston. A Long piston was introduced to the industry by advertisement in The Motor World, December, 1921. It was installed in the Franklin automobile, and use at a clearance of .005 was set forth in a service bulletin. The evils following clearance so great are sufficiently recited in our former opinion, and the announced clearance negatives the thought either of web flexibility or of its understanding by the art.

It is said that pistons could not in an air cooled motor as was the Franklin, be machined to the minute clearance possible in water cooled motors. If true, it follows that Long contributed little to the solution of a problem whereby successful operation of an aluminum piston in an iron cylinder at clearances of .002 or less was achieved. It should, moreover, be noted that Long was a worker in the piston art for a considerable period. Three of his patents are in

the record. It is conceded that No. 1,872,772 was his best effort, yet the structures urged to anticipate Jardine were devices prior to it, and while they may have had some commercial history, his latest patent still failed to describe or claim with flexibility.

Hartog, in his patent No. 1,842,022, prior to Jardine, claims internal yielding ribs, and means for yieldingly connecting skirt sections with the head. It seems clear from the Hartog description and drawings that his thought was of a springing resiliency in arcuate extensions of his skirt sections, and not of the bending or flexing of straight ribs so proportioned as to yield to the thermal expansion of the bosses on the cantilever principle, and that he did not disclose Jardine's mode of operation. There is little in the record to aid us to an understanding of Hartog. The experts did not discuss it, and the appellees appear to place no great reliance upon it. It is a mere paper patent without influence upon the art, and it is difficult, if not indeed impossible, to comprehend its mode of operation or whether it is operable at all, since he describes a piston skirt of greater diameter than the cylinder, mechanically compres- [fol. 2408] sible when cold, to fit tightly therein. Hartog taught nothing to Jardine.

The specimen claims 1, 8 and 11 of the Jardine patent are valid. Since our conclusion in this respect is based upon the concept of a combination with balanced skirt flexibility due to cooperation of longitudinal and vertical slotting with flexing webs supporting retracted bosses and connected to a skirt thereby made responsive to physical compression and thermal expansion so as to permit of minute clearances between piston and cylinder, a concept perceived in Gulick as amended and minus amendment no longer perceived, and since this combination with modifications which may improve but do not destroy it appears in Jardine, and since it is the combination that appears in the commercial piston of the Aluminum Company of America [2] responding to Maynard's specific form

[2] We are no more concerned than was the master below with the character of the monopoly sought by the appellants' licensee. Monopoly is the essence of the inventor's reward, and an assignable property right. Its control, abridgment or destruction lies wholly within the legislative province.

and in such form reproduced by Sterling Products Co., in exhibit I, sold by the appellees, we hold that the latter infringes claims 1, 8 and 11 of Jardine. As we were unable in our first decision to find Gulick's complete concept, as we then understood it, in other accused structures, so are we now unable to find in them Jardine's concept, and we hold they do not infringe.

The Mooers patent 1,402,309 was not greatly stressed in the earlier briefs or argument. It is not strongly urged now. It is contended that Mooers disclosed the scheme for converting heat into mechanical energy and diverting expansion through this energy into relieved spaces limiting expansion in those unrelieved. But if this is the teaching of Mooers it must be derived from inferences not permitted to be drawn from Gulick and Maynard, and without such interpretive approach the conclusion must be that the Mooers disclosure is incomplete. We hold its specimen claims to be invalid.

Schmiedeknecht patent 1,256,265 has now expired. It discloses no web flexibility cooperating with other elements of resiliency to achieve the balanced flexibility perceived in Jardine on the basis of which alone the latter is thought to be valid, and we sense no advance in Schmiedeknecht that distinguishes it from the prior art in aspects beyond the skill of the art. It does not invalidate Jardine and is itself invalid.

Appeals 7223, 7224 and 7225, are from decrees in the same causes determined by our previous opinion, and re- [fol. 2409] sponsive to our mandates therein. This unusual situation resulted from the denial of a petition for certiorari to our first judgment and denial of a petition for rehearing thereon. It was doubtless assumed below that the cases had reached finality. The decrees adjudicated certain claims of Gulick and Maynard valid and infringed by exhibit I, and granted the usual injunction and order for accounting. The issue as to them is now moot, and our mandates must be recalled and the decrees set aside.

The appellants, however, contend that the decrees should not have provided injunctive relief to the appellee Trust Company on the ground that it is the bare title holder of the patents in suit, with the Aluminum Company of America as exclusive licensee the only party entitled to seek it. They thereby deny our power to grant restraint in respect to claims now found valid and infringed. The

master, however, concluded that the Trust Company holds the entire right, title and interest to all patents in suit except an undivided half of the Maynard patent, that it might sue in its own name without joining with it the beneficiaries under the trust, and that the Aluminum Company is a non-exclusive licensee and not a necessary party to the suit. No exception was taken to his findings or conclusions in this respect, and they were not challenged when the case was first before this court. The right of appellees to injunction was no longer in issue when we gave direction for mandate. It is now the law of the case that appellees are entitled to an injunction restraining infringements of any claims of any of the patents in suit now adjudicated as valid and infringed.

A second objection to the decrees, and so impliedly to similar substituted decrees, is that they were not specific. It is urged that they should have recited with particularity the exhibits held to infringe, and those held not to infringe. There is merit to the first phase of the contention since an injunctional order should be as explicit as the case permits. There is no virtue in the second, since decision carries its own vindication of unsuccessfully assailed structures and no affirmative relief by appellants was prayed.

The decrees below will be set aside upon the recall of the mandates. A new decree will be entered in each case adjudicating claims 1, 8 and 11 of Jardine patent valid and infringed by exhibit I. It will provide for an injunction restraining manufacture, use and sale of exhibit I, and all substantial equivalents thereof, and grant the usual [fol. 2410] accounting for past infringement by exhibit I or its equivalents. It will deny relief as to every other claim of any of the patents in suit, and as against all other accused structures. Costs of the appeals will be divided.

Reversed and remanded for further proceedings in conformity herewith.

[fol. 2411] PETITION FOR REHEARING—Filed November 4, 1939

[fol. 2412] Nos. 7223-24-25, 8094-95-96

UNITED STATES CIRCUIT COURT OF APPEALS, SIXTH CIRCUIT

No. 7223

THE CLEVELAND TRUST COMPANY, CHRYSLER CORPORATION, Appellants,

v.

THE SCHRIBER-SCHROTH COMPANY, Appellee

No. 7224

SAME

v.

THE ABERDEEN MOTOR SUPPLY COMPANY, Appellee

No. 7225

SAME

v.

THE F. E. ROWE SALES COMPANY, Appellee

No. 8094

THE SCHRIBER-SCHROTH COMPANY, Appellant,

v.

THE CLEVELAND TRUST COMPANY, CHRYSLER CORPORATION, Appellees

No. 8095

THE ABERDEEN MOTOR SUPPLY COMPANY, Appellant,

v.

SAME

No. 8096

THE F. E. ROWE SALES COMPANY, Appellant,

v.

SAME

PETITION FOR REHEARING

To The Honorable The Judges of The United States Circuit Court of Appeals For The Sixth Circuit:

While we are loath to ask the Court for further consideration of these cases, the contentions which our adversaries

have made and may make in a companion case are such, we [fol. 2413] think, that if this Court is reminded thereof a modification of the decision rendered October 6, 1939, will be made.

We urged, in our Briefs and argument before this Court, that any decree entered in these cases should recite with particularity the devices held to be non-infringing. But this Court has said there is "no virtue" in our contention because

"decision carries its own vindication of unsuccessfully assailed structures * * *" (Dec. p. 10).

While in the ordinary case the decision might suffice for the purpose, there are special circumstances here which, to the end that future controversy may be avoided, impel us to ask that extra precaution be taken that the decrees below are specific in every particular.

1. The character of the devices held non-infringing cannot be ascertained from the decision. The only references made, in this Court's decision, to the non-infringing devices are:

Page 9: "* * * As we were unable in our first decision to find Gulick's complete concept, as we then understood it, in other accused structures, so are we now unable to find in them Jardine's concept, and we hold they do not infringe."

Page 11: "It will deny relief * * * as against all other accused structures."

Such "accused structures" are, however, neither illustrated nor described in this Court's decision. They are not even identified by exhibit numbers. How then can another Court determine, in another case, what this Court held to be non-infringing?

2. Counsel for The Cleveland Trust Co. insist estoppel is determined by the decree alone and not by the decision. [fol. 2414] While it is undoubtedly true that the law of this case is that

"decision carries its own vindication of unsuccessfully assailed structures,"

it should be remembered that the questions of estoppel, res adjudicata, and stare decisis, based on this Court's decision,

may, and probably will, arise in other cases. In such other cases the above quotation will not have been established as "the law of the case."

Counsel for the Trust Company will, therefore, be free, in such other case, to contend, as they have already contended in Sterling Products Corporation v. The Cleveland Trust Company, No. 5064* (In the United States District Court at Cleveland), that an estoppel cannot be based on a decision or opinion where the decree is silent.

In the above-mentioned case Counsel for the Trust Company asserted in "Defendant's Rebuttal Memorandum on Defendant's Motion for a Preliminary Injunction" that

"It is a Final Decree Alone which estops."

"Counsel (for Sterling) seek to make a statement by this Court in his *opinion* in the Simmons Suit, grounds for an estoppel against us (Trust Co.)." (Emphasis ours.)

Unless the District Court is directed to include in its decrees a provision to the specific effect that pistons like Exhibits 8, 9, BBB, CCC, 3J and 3-O do not infringe any of the patents in suit, the Trust Company will be free to argue, as it previously did with success, that the reversal set aside the previous decree below holding such pistons noninfringing. Despite the fact that, in its original decision, this Court said:

"In the remaining accused devices we find no infringement."

[fol. 2415] Counsel for the Trust Company asserted:

"The only ruling which the Court of Appeals made upon the question of infringement of Gulick and Maynard by the above numbered pistons, was to set aside the decree below which, in its rulings upon them, held noninfringement of the above numbered pistons. Thus the Court of Appeals annuled the ruling of this Court on noninfringement which the defendants ask the Court to reinstate without any authority in the mandate. It is untenable to say the Court intended to hold that these pistons were noninfringing when it had set aside the same identical holding by this Court" (P. 5, "Plaintiff's Brief on Defendant's Motion for Entry

* One phase of that case was before this Court in No. 7401.

of Final Decrees on Mandate" filed in the Court below December 8, 1937.)

All we hereby ask the Court to do is to direct the District Court to make its decrees particularly specific with respect to what is held noninfringing and thereby forestall the possibility that in the future, through loss of physical exhibits or otherwise, no one will be able to determine what this Court adjudged to be noninfringing. While we have not herein asked for a rehearing upon, or re-presented our arguments with respect to, other contentions as to which this Court has ruled against us, our failure to do so is not to be misunderstood as waiver of our right to seek review thereof.

Respectfully Submitted, John H. Bruninga, John H. Sutherland, Counsel for Defendants-Appellees.

It is hereby certified that the foregoing Petition for Rehearing is believed to be well founded in law and fact, and is not interposed for the purpose of delay.

John H. Sutherland, Counsel for Defendants-Appellees.

[fol. 2416] Order on Petition for Rehearing—Entered November 14, 1939.

Upon application entitled "Petition for Rehearing", filed by the appellees in the above entitled causes,

It is Hereby Ordered that the direction for mandates therein be amended to provide that the *the* decree ordered to be entered in each case will include an adjudication that the structures exemplified by exhibits 8, 9, BBB, CCC, 3J and 3-O, do not infringe any of the claims of any of the patents in suit.

Order Amending Mandate—Entered December 13, 1939

It appearing that the direction for mandate in our opinion in the above cause, announced at the October session of this court, was, upon petition of the appellees, amended so as to make specific the assailed structures held not to infringe, in accordance with which we amended the ordering clause to read:

"That the structures exemplified by exhibits 8, 9, BBB, CCC, 3-J, and 3-O, do not infringe any of the claims of any of the patents in suit."

And it now being called to our attention that not all of the [fol. 2417] claims of each of the patents adjudicated were in issue, and

It having been clearly our intention under command of the order of remand made by the Supreme Court, to determine all questions in the case not adjudicated, but to do no more than that; and

It being our view upon consideration of the response of the appellees to the petition, that the res judicata effect of the present decision upon other litigation now pending should more properly be adjudicated in such pending suits, and that any effort to predetermine the effect of presently ordered decrees upon such suits without consideration of the issues there involved is entirely too speculative for appropriate present adjudication, Now, Therefore,

It is Hereby Ordered that a supplemental mandate be issued in the above cause directed to the District Court, which supplemental mandate shall order that the original mandate heretofore issued, is amended so that the ordering clause therein shall provide in place of what is above recited, the following:

"That the structures exemplified by exhibits 8, 9, BBB, CCC, 3-J, and 3-O, do not infringe any of the claims of any of the patents in suit which they were charged to infringe."

[fol. 2418] UNITED STATES CIRCUIT COURT OF APPEALS FOR THE SIXTH CIRCUIT

I, J. W. Menzies, Clerk of the United States Circuit Court of Appeals for the Sixth Circuit, do hereby certify that the foregoing is a true and correct copy of record and proceedings in the case of The Cleveland Trust Company & Chrysler Corporation vs. The Schriber Schroth Company, The Aberdeen Motor Supply Company, The F. E. Rowe Sales Company, No-. 7223, 7224, 7225, as the same remains upon the files and records of said United States Circuit Court of Appeals for the Sixth Circuit, and of the whole thereof.

In Testimony Whereof, I have hereunto subscribed my name and affixed the seal of said Court at the City of Cincinnati, Ohio, this 3rd day of January, A. D. 1940.

J. W. Menzies, Clerk of the United States Circuit Court of Appeals for the Sixth Circuit. (Seal.)

[fol. 2419] [Stamp:] Office of the Clerk, Supreme Court, U. S. January 6, 1940

SUPREME COURT OF THE UNITED STATES, OCTOBER TERM, 1939

No. —

THE SCHRIBER-SCHROTH COMPANY, Petitioner,

vs.

THE CLEVELAND TRUST COMPANY, CHRYSLER CORPORATION;

THE ABERDEEN MOTOR SUPPLY COMPANY, Petitioner,

vs.

THE CLEVELAND TRUST COMPANY, CHRYSLER CORPORATION;

and

THE F. E. ROWE SALES COMPANY, Petitioner,

vs.

THE CLEVELAND TRUST COMPANY, CHRYSLER CORPORATION

Order Extending Time Within Which to File Petition for Certiorari

On Consideration of the application of counsel for the Petitioners,

It is Ordered that the time for filing a petition for writs of certiorari in the above entitled causes be extended for a period of 10 days from Jany. 6", 1940.

J. C. McReynolds, Associate Justice of the Supreme Court of the United States.

Dated this 6" day of January, 1940.

933

[fol. 2420] [Stamp:] Office of the Clerk, Supreme Court, U. S. January 6, 1940

SUPREME COURT OF THE UNITED STATES, OCTOBER TERM, 1939

No. —

THE CLEVELAND TRUST COMPANY, CHRYSLER CORPORATION, Petitioners,

vs.

THE SCHRIBER-SCHROTH COMPANY;

THE CLEVELAND TRUST COMPANY, CHRYSLER CORPORATION, Petitioners,

vs.

THE ABERDEEN MOTOR SUPPLY COMPANY;

and

THE CLEVELAND TRUST COMPANY, CHRYSLER CORPORATION, Petitioners,

vs.

THE F. E. [illegible]OWE SALES COMPANY

Order Extending Time Within Which to File Petition for Certiorari

On Consideration of the application of counsel for the Petitioners,

It is Ordered that the time for filing petition for writs of certiorari in the above entitled causes be extended for a period of 10 days from Jany. 6".

J. C. McReynolds, Associate Justice of the Supreme Court of the United States.

Dated this 6" day of January, 1940.

BLANK PAGE

[fol. 2414] SUPREME COURT OF THE UNITED STATES, OCTOBER TERM, 1940

No. 9

ORDER ALLOWING CERTIORARI—Filed March 25, 1940

The petition herein for a writ of certiorari to the United States Circuit Court of Appeals for the Sixth Circuit is granted.

And it is further ordered that the duly certified copy of the transcript of the proceedings below which accompanied the petition shall be treated as though filed in response to such writ.

Mr. Justice Roberts took no part in the consideration and decision of this application.

[fol. 2415] SUPREME COURT OF THE UNITED STATES, OCTOBER TERM, 1940

No. 10

ORDER ALLOWING CERTIORARI—Filed March 25, 1940

The petition herein for a writ of certiorari to the United States Circuit Court of Appeals for the Sixth Circuit is granted.

And it is further ordered that the duly certified copy of the transcript of the proceedings below which accompanied the petition shall be treated as though filed in response to such writ.

Mr. Justice Roberts took no part in the consideration and decision of this application.

[fol. 2416] SUPREME COURT OF THE UNITED STATES, OCTOBER TERM, 1940

No. 11

ORDER ALLOWING CERTIORARI—Filed March 25, 1940

The petition herein for a writ of certiorari to the United States Circuit Court of Appeals for the Sixth Circuit is granted.

And it is further ordered that the duly certified copy of the transcript of the proceedings below which accompanied the petition shall be treated as though filed in response to such writ.

Mr. Justice Roberts took no part in the consideration and decision of this application.

Endorsed on Cover: Enter John H. Sutherland. In Nos. 650-651-652. File Nos. 44,057, 44,058, 44,059, 44,060, 44,061, 44,062. U. S. Circuit Court of Appeals, Sixth Circuit, Term No. 9. The Schriber-Schroth Company, Petitioner, vs. The Cleveland Trust Company, Chrysler Corporation. Term No. 10. The Aberdeen Motor Supply Company, Petitioner, vs. The Cleveland Trust Company, Chrysler Corporation. Term No. 11. The F. E. Rowe Sales Company, Petitioner, vs. The Cleveland Trust Company, Chrysler Corporation. Term No. 653. The Cleveland Trust Company, Chrysler Corporation, Petitioner, vs. The Schriber-Schroth Company. Term No. 654. The Cleveland Trust Company, Chrysler Corporation, Petitioner, vs. The Aberdeen Motor Supply Company. Term No. 655. The Cleveland Trust Company, Chrysler Corporation, Petitioner, vs. The F. E. Rowe Sales Company. Petitions for writs of certiorari and exhibit thereto. Filed January 16, 1940. Term Nos. 9 O. T. 1940. 10 O. T. 1940. 11 O. T. 1940. 653 O. T. 1939. 654 O. T. 1939. 655 O. T. 1939.

BLANK PAGE

BLANK PAGE

FILE COPY

Office - Supreme Court, U. S.
FILED
JAN 16 1940
CHARLES ELMORE CROPLEY
CLERK

SUPREME COURT OF THE UNITED STATES.

OCTOBER TERM, 1939.

THE SCHRIBER-SCHROTH COMPANY,
Petitioner,
vs.
THE CLEVELAND TRUST COMPANY,
CHRYSLER CORPORATION,
Respondents.
No. [redacted] 9

THE ABERDEEN MOTOR SUPPLY COMPANY,
Petitioner,
vs.
THE CLEVELAND TRUST COMPANY,
CHRYSLER CORPORATION,
Respondents.
No. [redacted] 10

THE F. E. ROWE SALES COMPANY,
Petitioner,
vs.
THE CLEVELAND TRUST COMPANY,
CHRYSLER CORPORATION,
Respondents.
No. [redacted] 11

PETITION FOR WRITS OF CERTIORARI TO THE UNITED STATES CIRCUIT COURT OF APPEALS FOR THE SIXTH CIRCUIT

AND

SUPPORTING BRIEF.

JOHN H. BRUNINGA,
JOHN H. SUTHERLAND,
Attorneys for Petitioners.

ST. LOUIS LAW PRINTING CO., 415 North Eighth Street. CEntral 4477.

BLANK PAGE

INDEX.

	Page
Petition for writs of certiorari	1–10
Summary and short statement	2
The decision of the Court of Appeals	4
Jardine surrendered claims to flexing webs	4
The Long use and sale	6
Reasons relied upon for the allowance of the writ	8
Public importance	9
Prayer	10
Brief in support of petition for writs of certiorari	11–22
Opinions of courts below	11
Jurisdiction	12
Statement of the case	12
Specification of errors	12
Argument	14
I. The Circuit Court of Appeals treated "flexing webs" as essential elements of the Jardine patent, and held the patent valid notwithstanding that such elements are not mentioned in any of the claims, but were in fact surrendered during the prosecution of the application after adverse decisions in interferences, and intentionally excluded from the patent as essential elements, and the Court of Appeals refused to follow the decisions of this Court	14
II. The Court of Appeals' decision that the Long pistons were unavailing as a defense under the Patent Statute, R. S. 4886, although prior to the earliest proved date of the alleged invention of the Jardine patent in suit, unless the scientific explanation of the mode of operation of the Long pistons was understood, is contrary to the decision of this Court in De Forest Radio Co. v. General Electric Co., 283 U. S. 664	18

III. The court below erroneously ordered the issuance of an injunction restraining petitioners from the sale of pistons like Exhibit 1, which is all aluminum 20

Conclusion 22

Appendix. Decision of the Supreme Court of the United States in this case 23

Cases Cited.

De Forest Radio Co. v. General Electric Co., 283 U. S. 664, 51 S. Ct. 563 ..... 8, 13, 18

Doherty Research Company v. Vickers Petroleum Company, 80 Fed. (2) 809 21

Greenwalt v. American Smelting & Refining Company, 3 F. (2) 658, 660, affirmed 10 F. (2) 98, 99 17

I. T. S. Rubber Co. v. Essex Rubber Co., 272 U. S. 429, 443 17

Kaiser v. General Phonograph Supply Company, 171 Fed. 432 21

McCarty v. R. R. Company, 160 U. S. 110 ..... 4, 15

Permutit Co. v. Graver Corporation, 284 U. S. 52 ..... 4, 8, 13, 15, 16, 17

Peters Patent Corp. v. Bates & Klinke, 285 U. S. 392, l. c. 394 22

White v. Dunbar, 119 U. S. 47, l. c. 51-52 ..... 14, 16, 17

Statutes Cited.

Judicial Code, Sec. 240-A (28 U. S. Code, Sec. 347) .. 12

Patent Statute, R. S. 4888 (35 U. S. Code 33) 14

R. S. 4886 ..... 7, 18

R. S. 4920 18

SUPREME COURT OF THE UNITED STATES.

OCTOBER TERM, 1939.

THE SCHRIBER-SCHROTH COMPANY,
Petitioner,
vs.
THE CLEVELAND TRUST COMPANY,
CHRYSLER CORPORATION,
Respondents.
No. .....

THE ABERDEEN MOTOR SUPPLY COMPANY,
Petitioner,
vs.
THE CLEVELAND TRUST COMPANY,
CHRYSLER CORPORATION,
Respondents.
No. .....

THE F. E. ROWE SALES COMPANY,
Petitioner,
vs.
THE CLEVELAND TRUST COMPANY,
CHRYSLER CORPORATION,
Respondents.
No. .....

PETITION FOR WRITS OF CERTIORARI

To the United States Circuit Court of Appeals for the Sixth Circuit.

To the Honorable the Chief Justice of the United States, and the Associate Justices of the Supreme Court of the United States:

Your petitioners, The Schriber-Schroth Company, The Aberdeen Motor Supply Company, and The F. E. Rowe

Sales Company, respectfully pray for writs of certiorari to the Circuit Court of Appeals for the Sixth Circuit to review the judgments of that court entered on October 6, 1939. The time within which this petition might be filed was extended by order of Mr. Justice McReynolds on January 6, 1940 (R. 2412).

SUMMARY AND SHORT STATEMENT.

These causes were before this court at the October, 1938, term. Certiorari granted, 304 U. S. 587.

Petitioners were defendants in the District Court where they prevailed on all issues. The Circuit Court of Appeals reversed the District Court in part, but did not pass on other questions involved in the appeal, 92 F. (2) 330. This court's decision, 305 U. S. 47 (see Appendix hereto), reversed the causes with remand to the Court of Appeals for further proceedings. Upon remand, the Court of Appeals again reversed the District Court in part upon some questions not determined in its first decision, but affirmed the District Court on questions on which the Court of Appeals had previously reversed the District Court.

The facts germane to the questions before this court on the original petitions are summarized in this court's opinion, and are set out in the original petition and in the petitions for rehearing. Since many of these facts are also germane to the questions presented in this petition, we will merely summarize them and add such facts as are necessary for an understanding of the questions now presented.

Respondent,* an Ohio corporation, the assignee, in trust under a pooling agreement, of some eighty patents relating to pistons, brought three separate suits against the re-

*The Cleveland Trust Company is herein referred to as "Respondent," Chrysler Corporation having been but a nominal and unwilling party plaintiff.

spective petitioners (three Cleveland dealers in pistons made by Sterling Products Corporation of St. Louis, Missouri), alleging infringement of five different piston patents issued on applications* of Mooers, Schmiedeknecht, Gulick, Jardine and Maynard, because of the sale by Petitioners of six piston structures. One of these accused devices (Exhibit 1) was alleged to infringe all of the five patents. Other accused devices have been found by all courts not to infringe.

Respondent entered into an agreement (Exhibit 38b, R. 1382) in 1924, whereby it granted to Aluminum Company of America an exclusive license under all patents covering aluminum pistons, then or thereafter owned by it. In the same instrument, Aluminum Company of America agreed to convey to Respondent (subject to such license) all patents relating to pistons per se, then or thereafter owned by it (R. 1391); and the Jardine patent was brought under that agreement before it issued by assignment from Aluminum Company of America (R. 1322).

A special Master to whom the causes were referred held all of the patents invalid, and if valid that no one of the accused devices infringed any of the patents. The District Court affirmed the Master. The Circuit Court of Appeals originally held the Gulick and Maynard patents valid, and infringed by one of the accused devices (Exhibit 1). While the Court of Appeals did not originally pass upon the Jardine patent, the Court of Appeals said in its original decision that Jardine "carries the Gulick concept an important step forward," and that "whatever Jardine contributed to the art, if anything, is said to be incorporated in Maynard."

*Stated in the order of their filing dates.

The Decision of the Court of Appeals.

Upon remand, the Court of Appeals (R. 2396) held the Gulick and Maynard patents invalid over the prior art as to all of the claims in issue when construed to omit flexible webs, but as to the Gulick patent the Court of Appeals deemed it "unnecessary to consider whether his amendments voided his patent." The Court of Appeals, however, held the Jardine patent valid over the prior art as to the claims in issue (1, 8 and 11), and infringed by Exhibit 1, which is the same accused device which the Court of Appeals previously held infringed the Gulick and Maynard patents.

In holding the claims in issue of the Jardine patent valid, the Court of Appeals found the Jardine invention to reside in a combination including "flexing webs" as essential elements in the patented combinations and distinguishing over the prior art, although "flexing webs" are not mentioned in any of the claims of the Jardine patent, but mentioned only in the description. It will be remembered that "flexing webs" is the feature which the Court of Appeals previously found to characterize the Gulick and Maynard patents, but which this Court held (Appendix pp. 8-10) was neither described nor claimed in the Gulick application as filed nor in the Maynard patent as issued.

Hence, the holding of the Court of Appeals is contrary to the decisions of this court in this cause, 305 U. S. 47; Permutit Co. v. Graver Corporation, 284 U. S. 52, and McCarty v. R. R. Company, 160 U. S. 110.

Jardine Surrendered Claims to Flexing Webs.

There are other facts and circumstances here which preclude reading "flexing webs" into the claims of the Jardine patent. Jardine surrendered claims to such "flexing webs" during the prosecution of the application be-

fore, the Patent Office; indeed, in interference proceedings with others (Gulick, Long and Hartog) the decisions were adverse to Jardine on claims including flexing webs, and Jardine thereupon canceled such claims.* During the prosecution of the Jardine application, after the conclusion of the interferences with Gulick, Long and Hartog involving claims for pistons with flexing webs, and which claims were lost by Jardine and canceled, there was no further reliance on flexing webs, but other structural features were relied on to distinguish from the prior art. The Jardine patent finally issued with claims, none of which mentioned flexing webs.

At no time during the prosecution of the Jardine application was it urged that Jardine was the inventor of a piston having flexing webs. In distinguishing from a Ricardo patent (R. 1717) the only thing that was stressed was that the splitting of the slippers of the Ricardo piston involved invention (R. 2053). Finally, after Jardine had lost the interferences on claims including flexing webs, he filed an amendment cancelling those claims (R. 2108) and presenting claims 28 and 34 (now claims 8 and 11 of the Jardine patent held valid by the Court of Appeals). The accompanying argument (R. 2113) stressed structural features, but did not mention flexible webs.

Summarizing the prosecution of the Jardine application in the Patent Office, we find the following: the original application described flexible webs; thereafter claims including flexible webs were added by amendment; thereafter interferences were declared involving such claims; thereafter decisions were rendered in these interferences ad-

*On April 30, 1923, Jardine added claims mentioning flexing webs (R. 2066-8). These claims were copied from pending applications of other parties (Gulick, Long and Hartog) and became the subject matter of interferences with them. In all of the interferences involving flexing webs, the decisions were adverse to Jardine. These are the following: No. 49,570 (R. 2071-3), No. 49,572 (R. 2076-8), No. 49,578 (R. 2086-8), No. 49,579 (R. 2088-90), No. 49,581 (R. 2090-3), No. 49,583 (R. 2094-6), No. 49,590 (R. 2098-2100).

versely to Jardine; thereafter Jardine canceled all claims including flexing webs and stressed structural features as distinguished from flexing webs; finally the Jardine patent issued with claims, none of which mentioned flexing webs. Under such circumstances, it is clear that the claims of the Jardine patent were not put forward as directed to combinations including flexing webs, and that the intention was not to include flexing webs.

The Long Use and Sale

The record in this cause shows that one Elmer Long* produced aluminum web pistons as early as 1917,† and that from 1917 to 1922 such pistons were the only aluminum pistons sold or used which automatically compensated for expansion. Respondent's witness admitted that the Long piston was the first split piston in commercial use (R. 986). The date of their existence and use was shown to have been before March 11, 1920, when Jardine filed his application, and there is no proof of any earlier date for Jardine. Actual Long pistons (Exhibits E, F, G and R) were identified by both Petitioners' (R. 378, 441, 350) and Respondent's witnesses (R. 661, 669, 680, 685) as being the same as those sold and used prior to Jardine's filing date. They testified that all were cut away or relieved before Jardine filed. Respondent's witness, Jeffries, testified about one of these pistons proved to have been in use before 1920, and which the witness himself had seen in 1920, as follows (R. 1009-10):

"Q. What do you say; do you think the webs weren't

*This is the same Long who was in interference with Jardine, and who prevailed in such interferences on claims including flexing webs.

†This Court said in its decision (Appendix pp. 4-5): "The Long piston, Patent No. 1,872,772 of 1932, which the Master and the District Court found, was in commercial use from 1917 on, and before the amendment of the Gulick application, presently to be discussed, showed longitudinal slits cut through the skirt, which was separated by air spaces from the piston head, the two being connected by parallel webs pierced for wrist pin bearings."

flexible enough? You have the piston before you, so you ought to be able to tell something about it.

A. No, there is flexibility in the webs."

Despite the above admission and the fact that this court said in its decision (Appendix p. 6),

> "the Long piston, whose webs **concededly were laterally flexible,"**

the Court of Appeals decided that the prior sale and use of these Long pistons were unavailing as a defense under the Patent Statute, R. S. 4886, the court saying that the webs of the Long pistons were not "known to have that (flexing) quality" or that this "was then understood."*

As against the unquestionable commercial success of the Long pistons before Long was stopped by the Trust Estate (R. 2261) Respondent offered no evidence of commercial success of the Jardine piston at all. As the Court of Appeals says in its first decision (R. 2392), "Jardine was without commercial recognition." Respondent's witness Jeffries admitted that the Jardine piston was subject to oil pumping (R. 145), while the Long piston had an excellent oil consumption record as early as March, 1919 (Ex. Z, R. 1629-30). There is no evidence as to the clearance required for operation of a Jardine piston, but we do know that the Maynard piston, said to be based on the Jardine piston, could not be used in a Franklin air-cooled engine (R. 528), although the Long piston was used in such an engine as standard production from 1920 to 1928 to a total of 350,000 (R. 672).

The decision of the Court of Appeals is based on a mis-

*The Court of Appeals also said in considering the statement in this court's opinion just quoted, that such observation of this court was not "to be taken as a conclusion that the webs were flexible in use," although the Court of Appeals had previously said in considering this question of flexibility "probably no one has seen an automobile piston reciprocating in its cylinder." Respondent offered no test of any Jardine pistons or of the accused pistons in an engine in order to determine their quality or whether the piston webs were flexible in use.

taken legal conclusion that, to be effective under R. S. 4886, the scientific explanation of the operation of a device, proved to have been in prior use and on sale, must have been understood by those skilled in the art. That, we contend, is contrary to this Court's decision in DeForest Radio Co. v. General Electric Co., 283 U. S. 664.

REASONS RELIED UPON FOR THE ALLOWANCE OF THE WRIT.

Petitioners believe that the Writ of Certiorari should be granted in these cases for the following reasons:

I.

That the Court of Appeals for the Sixth Circuit misinterpreted or unduly limited this Court's decision in this case, 305 U. S. 47, and this Court's decision in Permutit Co. v. Graver Corporation, 284 U. S. 52, by refusing to hold a patent invalid where a feature found to be an essential element of the patented combination was not mentioned in the claims of the patent, and was in fact surrendered during the prosecution of the application, and after adverse decisions in interferences.

II.

That the Court of Appeals for the Sixth Circuit misinterpreted or unduly limited this court's decision in DeForest Co. v. General Electric Co., 283 U. S. 664, by refusing to hold a patent invalid where the feature, found to be an essential element of the patented combination, was actually present in a device proved to have been in use and on sale before the proved effective date of the patent in suit, unless the scientific explanation of the mode of operation of the device was understood.

III.

That the Court of Appeals has departed from the established law with respect to injunctions by holding that a patent litigant is entitled to an injunction restraining a trespass upon a right which the litigant does not own.

Public Importance.

This court previously granted certiorari in these cases, for the reason as stated in this Court's opinion, 305 U. S. 47:

> "We later granted certiorari, 304 U. S. 587, on a petition for rehearing showing that, notwithstanding the doubtful validity of the patents, litigation elsewhere with a resulting conflict of decision was improbable because of the concentration of the automobile industry in the Sixth Circuit. Cf. Paramount Publix Corporation v. American Tri-Ergon Corporation, 294 U. S. 464; Altoona Publix Theatres, Inc., v. American Tri-Ergon Corporation, 294 U. S. 477."

The conditions stated in the Petition for Rehearing still obtain in that approximately ninety-five per cent of the aumobiles are still produced in the sixth circuit, and that ninety-five per cent of the aluminum pistons manufactured in the United States are manufactured by manufacturers located in the sixth circuit or by Sterling Aluminum Products, Inc., which company has defended these causes and is defending a counterclaim for infringement of the Jardine patent in the sixth circuit. No suit against any other piston manufacturer in any other circuit has been filed to date. Hence, it is doubtful that this case could ever reach this court on the basis of conflicting decisions between different Circuit Courts of Appeal.

The comment of Court of Appeals anent this court's expressed reason for granting certiorari, viz:

> "It might be interesting to explore the availability of the Declaratory Judgment Act to dealers in other circuits to raise conflict"

overlooks the fact that respondent, an Ohio corporation, being the title holder of the patent, and hence the only party against whom declaratory judgment action can be brought, is not only a banking institution, but can only be sued in the sixth circuit.

Prayer.

Wherefore, your Petitioners respectfully pray that writs of certiorari be issued to the United States Circuit Court of Appeals for the Sixth Circuit to the end that these causes may be reviewed and determined by this court; that the decrees of the Circuit Court of Appeals for the Sixth Circuit be reversed, and that petitioners be granted such other and further relief as may be proper.

THE SCHRIBER-SCHROTH COMPANY,
THE ABERDEEN MOTOR SUPPLY COMPANY,
THE F. E. ROWE SALES COMPANY,

By JOHN H. BRUNINGA,
By JOHN H. SUTHERLAND,
Attorneys for Petitioners.

SUPREME COURT OF THE UNITED STATES.

OCTOBER TERM, 1939.

THE SCHRIBER-SCHROTH COMPANY, Petitioner, vs. THE CLEVELAND TRUST COMPANY, CHRYSLER CORPORATION, Respondents.	No. .....
THE ABERDEEN MOTOR SUPPLY COMPANY, Petitioner, vs. THE CLEVELAND TRUST COMPANY, CHRYSLER CORPORATION, Respondents.	No. .....
THE F. E. ROWE SALES COMPANY, Petitioner, vs. THE CLEVELAND TRUST COMPANY, CHRYSLER CORPORATION, Respondents.	No. .....

BRIEF IN SUPPORT OF PETITION FOR WRITS OF CERTIORARI.

OPINIONS OF COURTS BELOW.

The report of the Special Master before whom the case was tried on its merits is found in pages 1092 to 1189 of the Record. The Master's Findings of Fact and Conclusions of Law are found in pages 1096 to 1109 of the Rec-

ord. The Memorandum Opinion of the District Court overruling Respondent's exceptions to the report of the Special Master and adopting the Special Master's Findings of Facts and Conclusions of Law as those of the court is found at Record page 1230.

The first opinion of the Circuit Court of Appeals (Circuit Judges Hicks, Simons and Allen, Judge Simons writing) is reported at 92 F. (2d), page 330, and appears at pages 2381 to 2394 of the Record.

The previous opinion of this Court is reported at 305 U. S. 47 and is reproduced in an Appendix hereto. The opinion of the Circuit Court of Appeals on remand (Circuit Judges Hicks, Simons and Allen, Judge Simons writing) is not yet reported in the Federal Reporter,* but appears at pages 2396 to 2406 of the Record.

JURISDICTION.

The judgment of the Circuit Court of Appeals was entered October 6, 1939 (R. 2396).

The statute giving jurisdiction is Section 240-A of the Judicial Code (28 U. S. Code, Sec. 347).

STATEMENT OF THE CASE.

The foregoing petition contains a summary of the material facts necessary to an understanding of the reasons relied upon for the allowance of the writ, as well as a statement of questions involved in the case.

SPECIFICATION OF ERRORS.

1. That the Court of Appeals for the Sixth Circuit erred in finding and holding patentable a combination including an essential element not mentioned in the claims of the

*But it is reported at 43 U. S. Patent Quarterly 204.

Jardine patent in suit, and which was in fact surrendered during the prosecution of the application, and in refusing to follow this Court's decision in this cause, 305 U. S. 47, and this Court's decision in Permutit Co. v. Graver Corp., 284 U. S. 52.

2. That the Court of Appeals erred in refusing to hold the Jardine patent in suit invalid, when the feature found to be an essential element of the patented combination, was actually present in the same combination in devices proven to have been in prior use and on sale before the earliest proved date of the alleged invention of the patent in suit, and in refusing to follow this Court's decision in De Forest Radio Co. v. General Electric Co., 283 U. S. 664, 51 S. Ct. 563.

3. That the Court of Appeals erred in granting an injunction against infringement of the Jardine patent in suit by the sale of aluminum pistons by Petitioners where the Respondent, a banking institution, was simply an Assignee in Trust under a pooling agreement of some eighty patents, including the Jardine patent in suit and where Respondent had granted a license to Aluminum Company of America, a corporation, giving it the exclusive right to make, use and sell aluminum pistons under the pooled patents, including the Jardine patent in suit, and where Respondent was never entitled to make, use or sell aluminum pistons in accordance with the Jardine patent in suit.

4. That the Court of Appeals erred in reversing and in not affirming the judgment of the District Court holding the Jardine patent in suit invalid, and even if valid, not infringed, and in awarding any costs to Plaintiff-Respondent.

ARGUMENT.

I.

The Circuit Court of Appeals Treated "Flexing Webs" as Essential Elements of the Jardine Patent, and Held the Patent Valid Notwithstanding That Such Elements Are Not Mentioned in Any of the Claims, But Were in Fact Surrendered During the Prosecution of the Application After Adverse Decisions in Interferences, and Intentionally Excluded From the Patent as Essential Elements, and the Court of Appeals Refused to Follow the Decisions of This Court.

The Patent Statute, R. S. 4888 (35 U. S. Code 33), requires an applicant for a patent to not only file a written description of his invention but to

> "particularly point out and distinctly claim the part, improvement, or combination which he claims as his invention or discovery."

In White v. Dunbar, 119 U. S. 47, l. c. 51-52, this Court stated the purpose of the Patent Statute and the limits of the interpretation of claims as follows:

> "Some persons seem to suppose that a claim in a patent is like a nose of wax which may be turned and twisted in any direction, by merely referring to the specification, so as to make it include something more than, or something different from, what its words express. The context may, undoubtedly, be resorted to, and often is resorted to, for the purpose of better understanding the meaning of the claim; but not for the purpose of changing it, and making it different from what it is. The claim is a statutory requirement, prescribed for the very purpose of making the patentee define precisely what his invention is; and it is unjust to the public, as well as an evasion of the law, to con-

strue it in a manner different from the plain import of its terms."

In McCarty v. R. R. Co., 160 U. S. 110, l. c. 116, it was sought to read a feature into the claim of a patent to save it. This court says:

> "There is no suggestion in either of these claims that the ends of the bolster rest upon springs in the side trusses, although they are so described in the specification and exhibited in the drawings. It is suggested, however, that this feature may be read into the claims for the purpose of sustaining the patent. While this may be done with a view of showing the connection in which a device is used, and proving that it is an operative device, we know of no principle of law which would authorize us to read into a claim an element which is not present, for the purpose of making out a case of novelty or infringement. The difficulty is that if we once begin to include elements not mentioned in the claim in order to limit such claim and avoid a defence of anticipation, we should never know where to stop."

That case was cited with approval by this Court in Permutit Co. v. Graver Corp., 284 U. S. 52, which involved a situation as here, where the Court of Appeals had read into the claims of the patent what that court found was an essential element, namely, a "free" zeolite bed, while the claims mentioned only a "bed * * * of zeolites." While in that case the specification also failed to describe the bed as a "free" bed, this Court considered both phases (description and claims) of the Patent Statute, R. S. 4888. After stating that the claims did not "make mention of a 'free' zeolite bed" and that the patentee had "failed particularly to point out and distinctly claim the free zeolite bed," and that "the patent is void," this Court says (l. c. 59):

> "The absence in the claims of a sand bed placed above the zeolites does not imply that the zeolite bed is to be unconfined. The only normal inference from such silence is either that it was deemed immaterial whether the zeolite bed be locked or free, or that if a free bed is preferable, it was not claimed because it lacked novelty."

This Court then states the purpose of the Patent Statute as follows (l. c. 60):

> "The statute requires the patentee not only to explain the principle of his apparatus and to describe it in such terms that any person skilled in the art to which it appertains may construct and use it after the expiration of the patent, but also to inform the public during the life of the patent of the limits of the monopoly asserted, so that it may be known which features may be safely used or manufactured without a license and which may not. The free bed was neither described in the specification nor claimed in either Claim 1 or Claim 5."

In the decision of this Court in this cause, 305 U. S. 47, the situation was as in Permutit v. Graver with reference to the Maynard patent, in that neither the specification nor the claims mentioned "flexible webs" found by the Court of Appeals to be essential elements. This Court, after having considered Permutit v. Graver, and quoting the part just quoted therefrom relating to the claim requirement, says (Appendix p. 10):

> "We conclude that the court below erred in giving any effect to so much of the Gulick patent as by amendment describes or claims the flexible webs, and in treating any of the specifications or claims in Gulick and Maynard as referring to such webs."

While the specification may be resorted to "for better understanding the meaning of the claim" (White v. Dun-

bar, supra), and "with a view of showing the connection with which the device is used" (McCarty v. R. R. Co., supra), here we have a situation where the Jardine original application described flexing webs; thereafter claims including flexing webs were added by amendment; but in interference proceedings decisions were rendered adversely to Jardine, followed by cancellation of such claims and the retention and submission of claims, none of which mentioned flexing webs. Under such circumstances it cannot now be said that the intention was to include flexing webs in the claims. Here paraphrasing this Court's statement in Permutit Co. v. Graver Corp. (l. c. 59, 284 U. S.):

> the only normal inference from such silence is either that it was deemed immaterial whether the webs were rigid or flexing, or that if flexing webs were preferable, they were not claimed because they lacked novelty.

Such inference can be drawn in this case from the fact that Jardine lost claims including flexing webs in interference proceedings, and whether the Patent Office was right or wrong, the court cannot inquire, because the cancellation of the claims amounted to disclaimers (I. T. S. Rubber Co. v. Essex Rubber Co., 272 U. S. 429, 443). While that case did not involve cancellation after interference, the principle has been specifically applied to adverse judgments in interferences (Greenwalt v. American Smelting & Refining Company, 3 F. [2] 658, 660, affirmed 10 F. [2] 98, 99). In the above case it was held in the District Court that

> "Whatever is excluded in interference cannot be included in the patent; and whatever cannot thus be included cannot be claimed by construction."

II.

The Court of Appeals' Decision That the Long Pistons Were Unavailing as a Defense Under the Patent Statute, R. S. 4886, Although Prior to the Earliest Proved Date of the Alleged Invention of the Jardine Patent in Suit, Unless the Scientific Explanation of the Mode of Operation of the Long Pistons Was Understood, Is Contrary to the Decision of This Court in De Forest Radio Co. v. General Electric Co., 283 U. S. 664.

R. S. 4886 provides as a prerequisite to a valid patent that the subject matter shall not have been known or used or on sale before the invention date of the patent, and R. S. 4920 provides for such prior knowledge or use or sale as a defense. The Patent Statutes do not say that the scientific explanation of a prior known or used or sold device shall have been known to anybody.

In De Forest Radio Co. v. General Electric Co., 283 U. S. 664, this court considered a radio tube which had been used by De Forest prior to the effective invention date of the patent in that suit. This court said (l. c. 686):

> "Whether De Forest knew the scientific explanation of it is unimportant, since he did know and use the device and employed the methods, which produced the desired results, and which are the device and methods of the patent."

There is a distinction between a prior art patent and publication on the one hand and a prior use on the other hand. Where a prior patent or publication is involved, the description must be complete enough to enable one skilled in the art to reproduce what is described. When, however, it comes to a prior use, then we have the article in existence which can be duplicated, and it is therefore immaterial whether those skilled in the art knew what

the characteristics were, because of such facility for duplication. If the contrary were true, then the discovery of the scientific explanation of many things which had been in use would permit patents to be secured for those old things.

Here the Court of Appeals did not dispute the fact that before Jardine's earliest date, which is May 11, 1920, the filing of his application, that Long pistons of the character represented by Exhibits E, F, G and R were in existence, for that was in accordance with the testimony of Petitioners,' as well as Respondent's, witnesses, as shown in the Statement. Further, as shown in the Statement, it was conceded by Respondent's own witness and expert that in at least one of these pistons, Exhibit F, "there is flexibility in the webs."

We not only have one Long piston, but we have exemplifications of four pistons the like of which were proved to have been produced before Jardine filed. These pistons were not only produced in sand molds, but in iron molds, before Jardine filed; in fact the patterns and cores for the sand molds and metal molds are in evidence (R. 376), and have dates of existence as well as dates of use prior to Jardine's filing date. Here, therefore, we have a situation where we can even tell today whether the Long pistons prior to Jardine's filing date had flexible webs. By Jeffries' admission that Exhibit F has "flexibility in the webs," at least all of the Long pistons produced by the medium of the same core box and pattern must have the same characteristic, because of the well-known fact that castings produced by the medium of the same pattern and core box must be alike.

As shown in the Statement, all of the Long pistons were cut away or relieved in the regions of the bosses, although such relief is not shown in the Long patent because it was a common expedient, and therefore was deemed unnecessary to be shown on the patent. What Jardine did was to